FAGOR

FAGOR INDUSTRIAL

DESPIECE TÉCNICO
TECHNICAL PARTS

Lavadoras
Washer extractors



MODELOS
LA-45 TP
LA-60 TP

Junio 2016 June



	MUEBLE / CABINET	LÁMINA / DRAWING		FAGOR

ITEM	REFERENCIA REFERENCE	DENOMINACIÓN	DENOMINATION	LA-45 TP	LA-60 TP						RECOMMENDED	ELIMINADO ELIMINATED	INTRODUCIDO INTRODUCED
1	P660351000	PANEL LATERAL V2 60	SIDE PANEL V2 60	4	4								
2	P660311000	ENCIMERA ANTERIOR 60	FRONT WORKTOP 60	1	1								
3	P660315000	ENCIMERA POSTERIOR 60	REAR WORKTOP 60	1	1								
4	P660304000	PANEL VACIADO 60	DRAIN PANEL 60	1	1								
5	P660305000	PANEL POST. INTERMEDIO 60	REAR MIDDLE PANEL 60	1	1								
6	P660352000	ZOCALO V2 60	SKIRTING V2 60	1	1								
7	P660355000	PANEL LATERAL CUBETERA C. 60	BASIN REAR PANEL COMPL.60	1	1								
8	12007975	ADHESIVO SUPERIOR LA-120	TOP ADHESIVES LA-120	1	1								
9	P660306000	PANEL POST. VALVULAS 60	VALVES REAR PANEL 60	1	1								
10	P660349000	PANEL LATERAL SUPERIOR V2 60	SIDE TOP PANEL V2 60	1	1								
11	P532103000	VALVULA VACIADO	DRAIN VALVE	1	1						X		
12	P660309000	COLUMNA POSTERIOR 60	REAR COLUMN 60	1	1								
13	P660301000	PORTAMANDOS 60	CONTROL HOLDER 60	1	1								
14	P660354000	TAPA VALVULAS 60	VALVES COVER 60	1	1								
15	12120238	SOPORTE SETA EMERGENCIA	EMERGENCY STOP SUPPORT	1	1						X		
16	12120237	PULSAD. 250V AC 16A 1VIA 2POS UL	250V AC 16A 1WAY 2POS UL SWITCH	1	1						X		
17	12120235	SETA DE EMERGENCIA	EMERGENCY STOP BUTTON	1	1						X		
18	12115334	ADHESIVO COLUMNAS TP FAGOR	COLUMN ADHESIVE TP FAGOR	1	1						X		
19	12120561	CHAPA VISUALIZADOR TP COMPL.	COMPLETE DISPLAY TP SHEET	1	1								
20	12119488	DISPLAY TP	DISPLAY TP	1	1						X		
21	12120404	TARJETA DISPLAY TFT	TFT DISPLAY CARD	1	1						X		
22	12116871	CABLEADO LATIGUILLO USB	USB WIRE	1	1								
23	12119993	CABLE DVI-D (Dual Link) (M-M, 2M)	DVI-D WIRE (Dual Link) (M-M, 2M)	1	1								
24	12119954	TAPON USB	USB CAP	1	1								
25	P540404000	PUERTA CUBETERA COMPLETA	COMPLETE BASIN DOOR	1	1								
26	X012612000	PITON CIERRE	LOCK SPIKE	1	1								
27	P660347000	COLUMNA ANTERIOR IZDA. V2 60	LEFT FRONT COLUMN V2 60	1	1								
28	P660348000	COLUMNA ANTERIOR DER. V2 60	RIGHT FRONT COLUMN V2 60	1	1								
29	P540370000	PARACHOQUES 55KG	BUMPER 55KG	1	1								

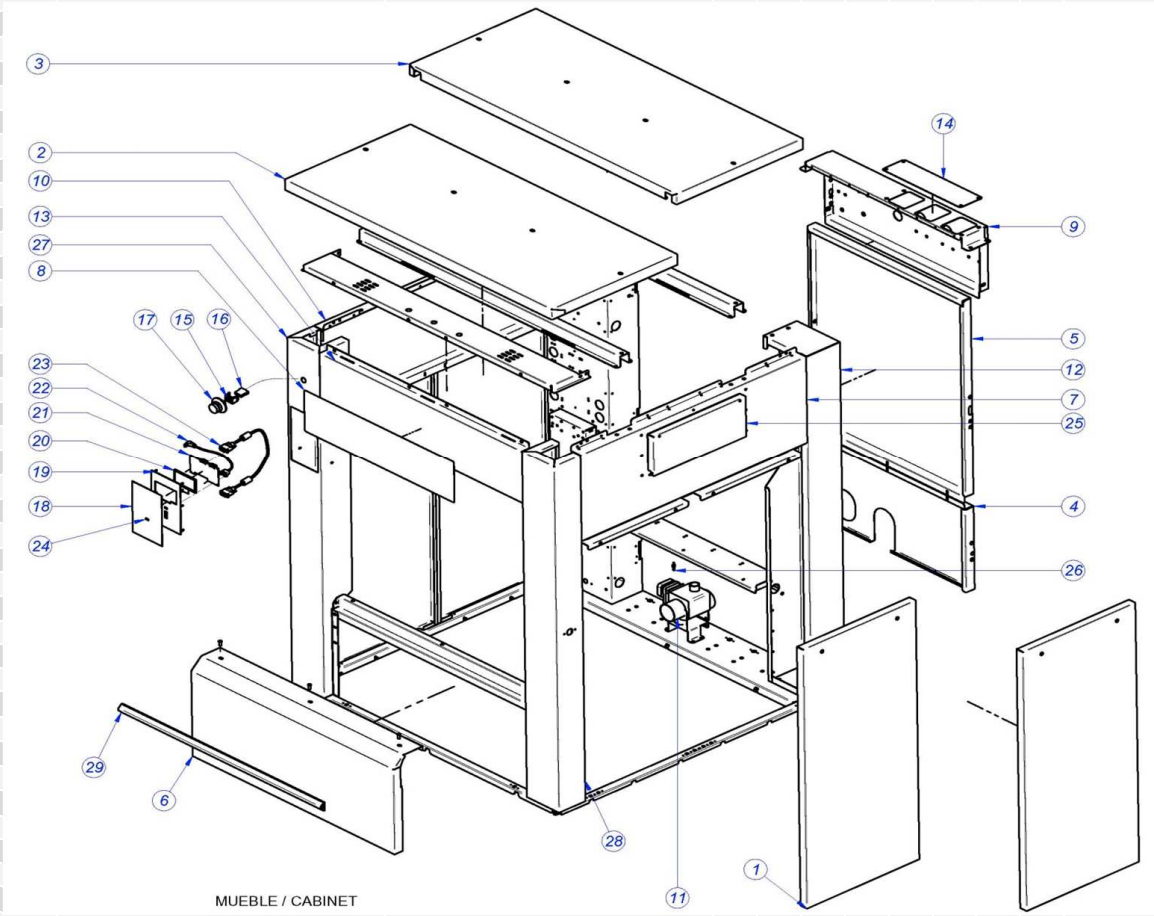

MUEBLE / CABINET

	PUERTA / DOOR	LÁMINA / DRAWING		FAGOR

ITEM	REFERENCIA REFERENCE	DENOMINACIÓN	DENOMINATION	LA-45 TP	LA-60 TP						RECOMMENDED	ELIMINADO ELIMINATED	INTRODUCIDO INTRODUCED
1	P660530000	PUERTA COMPLETA 60/40 V3	COMPL. DOOR 60/40 V3	1	1								
2	P680515000	VARILLA ROSCADA PUERTA 120	DOOR THREADED ROD 120	4	4								
3	Q162066000	TUERCA EXAGONAL M10 INOX.	HEXAGONAL NUT M10 INOX.	12	12								
4	P660502000	PUERTA PISADOR COMPLETO 60	COMPL. DOOR HOLD-DOWN 60	1	1								
5	12038666	EMBELL.MARCO PUERTA	DOOR FRAME TRIM	1	1								
6	P540505000	JUNTA MIRILLA 55	INSPECTION WINDOW SEAL 55	1	1								
7	P540503000	MIRILLA PUERTA 55	INSPECTION WINDOW DOOR 55	1	1								
8	Q212040000	TUER.SOMB.M6	CAP NUT M6	8	8								
9	P680511000	CASQUILLO "SELFOIL 16-22-25	SELFOIL BUSHING 16-22-25	4	4								
10	P680548000	EJE BISAGRA	HINGE SHAFT	2	2								
11	P660527000	BISAGRA PUERTA 60	DOOR HINGE 60	2	2								
12	Q301010000	ARAND 27X12,5X2,5HIER	WASHER 27X12,5X2,5HIER	4	4								
13	Q011376000	TOR.EX.M12X40 H.ZINCADO	HEX.SCREW.M12X40 H.ZINC	4	4								
14	P660529000	CALZO BISAGRA 60,40	HINGE WEDGE 60,40	4	4								
15	P680526000	CASQUILLO SELFOIL DE VALONA	VALONA SELFOIL BUSHING	1	1								
16	P660528000	EJE PUERTA 40/60	DOOR SHAFT 40/60	1	1								
17	Q132041100	VARILL. ROSC. EXTR. CON. M6X	THREAD. ROD CON. END M6X	1	1								
18	Q272072000	ARAND. SEG. A24 DIN6799 INOX	SAFETY WASHER A24 DIN6799 INOX	1	1								
19	P660521000	EJE LEVA PUERTA 60/40	DOOR CAM SHAFT 40/60	1	1								
20	Q162090000	TUER.EXA.M16	HEX NUT M16	1	1								
21	P540516000	CASQUILLO ENGANCHE	HOOK BUSHING	1	1								
22	12023355	SUPLEMENTO EJE LEVA 40/60	SUPLEMENT CAM SHAFT 40/60	1	1								
23	P680528000	PALANCA LEVA 120	CAM LEVER 120	1	1								
24	P680531000	MANGO PUERTA 120	DOOR HANDLE 120	1	1								
25	P680530000	SOPORTE GOMA 120	RUBBER SUPPORT 120	6	6								
26	P660535000	JUNTA PUERTA 60	DOOR SEAL 60	1	1								
27	Q222012000	TUER.AUTOB.M6	SELF-LOCK.NUT.M6	6	6								
28	P540519000	SEPARADOR CRISTAL	GLASS SEPARATOR	8	8								
29	P540520000	PISADOR CRISTAL	GLASS HOLD-DOWN	8	8								

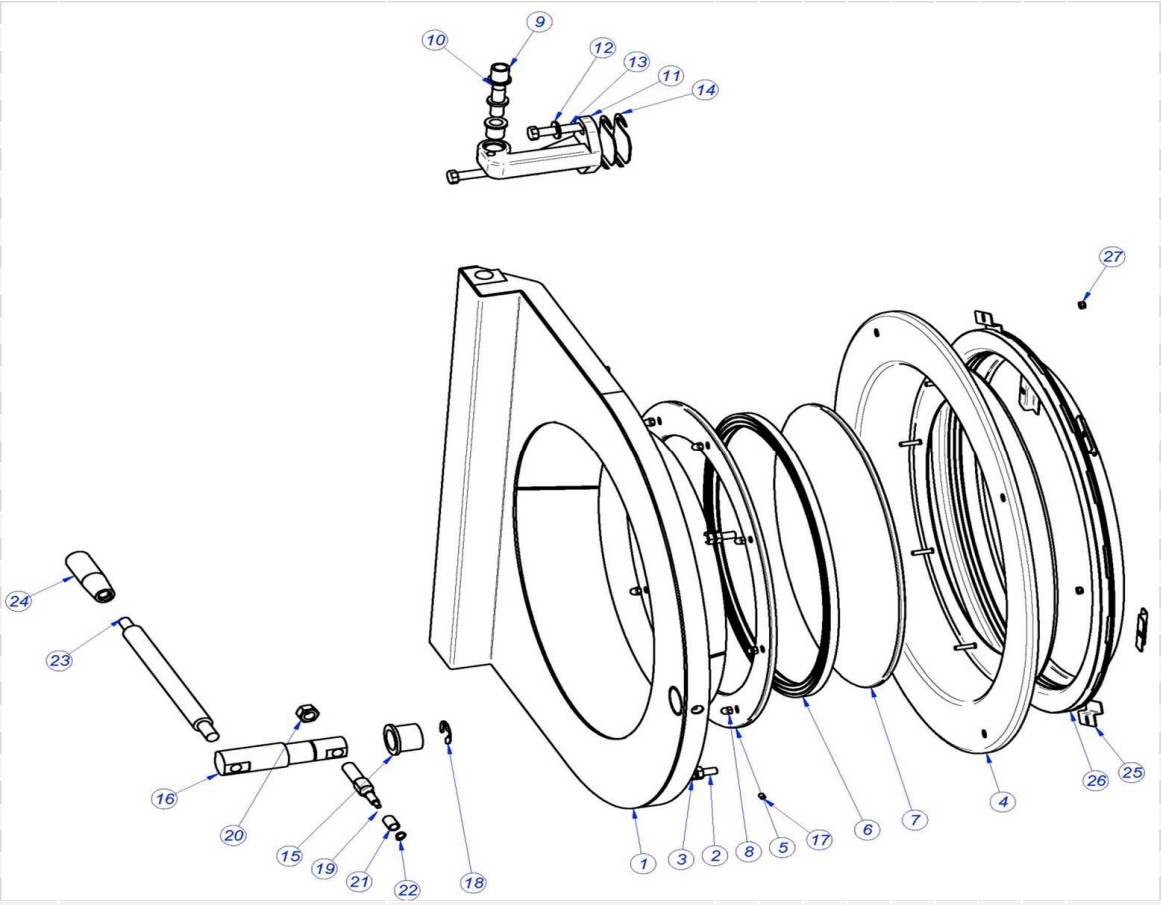

	CIERRE / LOCK	LÁMINA / DRAWING		FAGOR

ITEM	REFERENCIA REFERENCE	DENOMINACIÓN	DENOMINATION	LA-45 TP	LA-60 TP						RECOMMENDED	ELIMINADO ELIMINATED	INTRODUCIDO INTRODUCED
1	Q232030000	ARANDELA A5	WASHER A5	4	4								
2	P650508000	PROTECTOR CONEXION. CIERRE	CLOSURE CONNECTIO. GUARD	1	1								
4	P613002000	ELECTROIMAN PUERTA	DOOR ELECTROMAGNET	1	1						X		
5	Q032013000	TORN.ALOM.M3X20	CURVED SCREW.M3X20	4	4								
6	Q242040000	ARANDELA ABAN. A6 A.304	WASHER A6 A.304	4	4								
7	P650506000	EJE BLOQUEO 40,60,120	LOCKING SHAFT 40,60,120	1	1								
8	Q242050000	ARAND.ABAN. A8 A.304	FAN WASHER A8 A.304	4	4								
9	Q152017000	TORN.AMAR.M6X13 A304	FASTENING SCREW M6X13 A304	2	2								
10	P650503000	LEBA CIERRE 40,60,120	LEBA CLOSURE 40,60,120	1	1								
11	Q012045000	TORN.EXA. M6X30 A.304	HEX BOLT M6X30 A.304	2	2								
12	P650502000	BASE CIERRE 40,60,120	CLOSURE BASE 40,60,120	1	1								
13	Q012055000	TORN.EXA. M8X30 A.304	HEX BOLT M8X30 A.304	4	4								
14	Q012042000	TORN.EXA. M6X15	HEX BOLT M6X15	2	2								
15	P620529000	DESBLOQUEO	UNLOCK	1	1								
16	Q151396000	TORN. ALLEN M2.5x5	BOLT, ALLEN M2.5x5	2	2								
17	Q232050000	ARANDELA A8	WASHER A8	4	4								
18	12138167	BLOQUEO CIERRE 40,60,120	CLOSURE LOCK 40,60,120	1	1						X		
19	P650505000	TAPA CIERRE 40,60	LOCK COVER 40.60	1	1								
20	P620526000	INTERRUPTOR PUERTA PLANO	FLAT DOOR SWITCH	2	2						X		
21	P650501000	SOPORTE CIERRE 40,60,120	CLOSURE SUPPORT 40,60,120	1	1								
22	P623010000	CABLEADO PUERTA	DOOR WIRING	1	1								

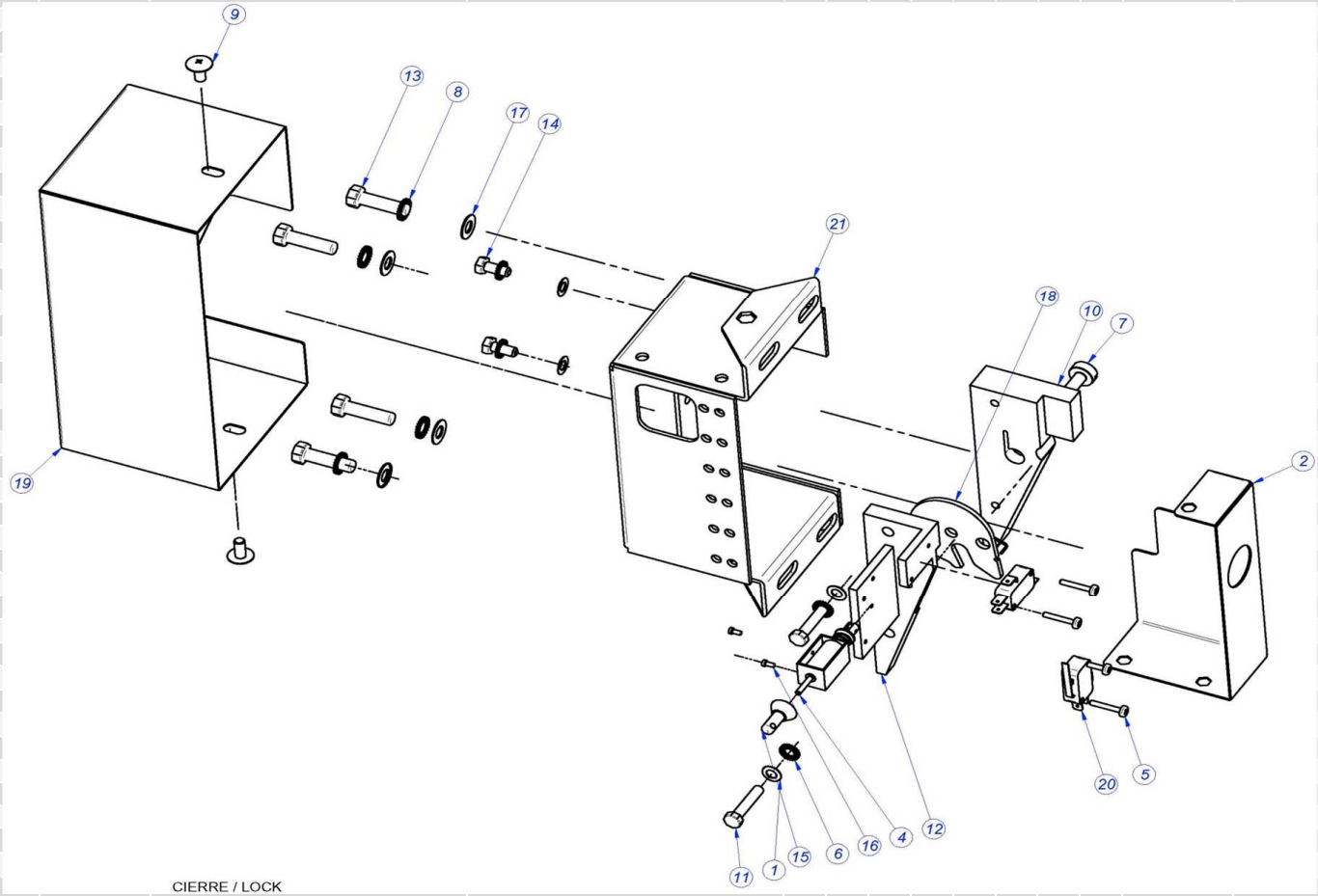

CIERRE / LOCK

	ARMAZON / FRAME	LÁMINA / DRAWING		FAGOR

ITEM	REFERENCIA REFERENCE	DENOMINACIÓN	DENOMINATION	LA-45 TP	LA-60 TP						RECOMMENDED	ELIMINADO ELIMINATED	INTRODUCIDO INTRODUCED
1	12092617	ARMAZON 45	FRAME 45	1	_								
1	12023300	ARMAZON 60	FRAME 60	_	1								
2	12023257	PATA RIGIDA 60	RIGID LEG	4	4								
3	Q151326000	TOR.EX.M10X55 H.ZINCADO	HEX.SCREW.M10X55 H.ZINC	2	2								
4	Q221306000	TUE.EX.AUT.M10 8.8 ZIN	HEX. SCREW. AUT. M10 8.8 ZIN	10	10								
5	Q151302000	TORNILLO EXAG.M.20x110	HEXAGONAL SCREW M.20x110	4	4								
6	Q221348000	TUERCA EXAG.AUTOBL.M.20	HEX.SCREW.AUT.M20	10	10								
7	P650103000	ANCLAJE LATERAL 40	SIDE ANCHORAGE 40	3	_								
7	P660106000	ANCLAJE LATERAL 60	SIDE ANCHORAGE 60	_	3								
8	Q151354000	TORNILLO EXAG.M.20x80	HEXAGONAL SCREW M.20x80	6	6								
9	12023467	CASQUILLO AMORTIGUADORES	SHOCK ABSORBER BUSHING	12	12								
10	Q231311000	ARANDELA A21	WASHER A21	20	20								
11	P540203000	PASADOR MUELLE 55Kg.	SPRING SAFETY 55Kg.	6	6								
12	Q352017000	PASADOR DE ALETAS 3 X 50	FIN SAFETY 3 X 50	12	12								
13	12049230	AMORTIG. HIDRAULIC LAV40-60-120	HIDRAULIC SHOCK ABSORB.	8	8								
14	12025076	AMORTIGUADOR 250N SUSPA	SHOCK ABSORB. 250N SUSPA	_	2								
15	Q151356000	TORN.EXAG.M10X110	HEXAGONAL SCREW M.10x110	6	6								
16	Q232060000	ARANDELA A10	WASHER A10	19	19								
17	Q151525000	EXAG. M10X150(8.8) DIN931	HEXAG. M10X150(8.8) DIN931	2	2								
18	P663012000	SOPORTE MICRO DESEQ. V2	UNBALANCE MICRO SUPPORT. V2	1	1								
19	P543051000	FINAL DE CARRERA VARILLA	FIN DE CARRERA DIPSTICK	1	1								
20	P663013000	RANURA MICRO DESEQUILIBRIO	UNBALANCE MICRO HOLE	1	1								

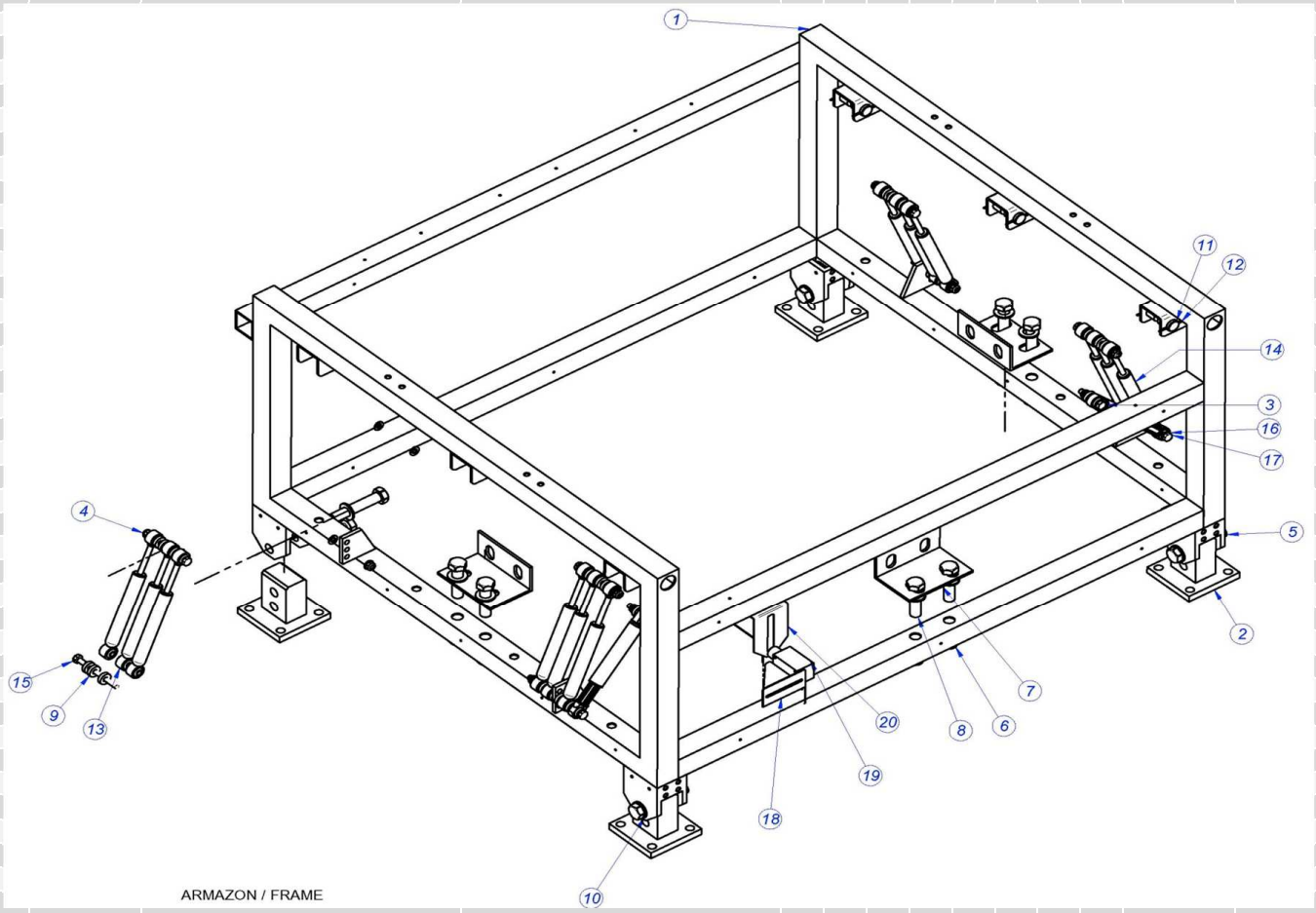

ARMAZON / FRAME

	CUNA / CRADLE	LÁMINA / DRAWING		FAGOR

ITEM	REFERENCIA REFERENCE	DENOMINACIÓN	DENOMINATION	LA-45 TP	LA-60 TP						RECOMMENDED	ELIMINADO ELIMINATED	INTRODUCIDO INTRODUCED
1	12092494	CUNA COMPLETA 45	COMPLETE CRADLE 45	1	1								
1	12023289	CUNA COMPLETA 60	COMPLETE CRADLE 60	_	1								
2	12023202	CONTRAPESO MOTOR 45	MOTOR COUNTERWEIGHT 45	1	_								
2	12023191	CONTRAPESO MOTOR 60	MOTOR COUNTERWEIGHT 60	_	1								
3	12126333	TORN.EXA. M16X100MM DIN931	HEX. SCREW M16X100MM DIN931	4	4								
8	12025157	PASADOR MUELLE 55Kg.	SPRING PIN 55Kg.	6	6								
10	12010137	PASADOR DE ALETAS 3 X 50	COTTER PIN 3 X 50	12	12								
11	12024853	MUELLE LF-40	SRING LF-40	6	_								
11	12023470	MUELLE LF-60	SRING LF-60	_	6								
12	12023243	CORREA 40 SPB 2840	BELT 40 SPB 2840	3	_						X		
12	12023241	CORREA 60 SPB 3000	BELT 60 SPB 3000	_	3						X		
15	12023185	MOTOR 7,15KW	MOTOR 7,15KW	1	_						X		
15	12023183	MOTOR 11KW	MOTOR 11KW	_	1						X		
S/Nº	12040959	KIT PATAS MOTOR QS132	LEGS KIT MOTOR QS132	1									
16	12024860	POLEA MOTOR SPB/B 118-3	MOTOR PULLEY SPB/B 118-3	1	1								
17	12023453	CINTA SOPORTE CUBA 40	TUB SUPPORT TAPE 40	4	_								
17	12023430	CINTA LARGA SOPORTE CUBA 60	TUB SUPPORT LONG TAPE 60	_	2								
18	12023454	CINTA CORTA SOPORTE CUBA 60	TUB SUPPOR. SHORT TAPE 60	_	2								
21	12025119	TAPER BUSH MOTOR	TAPER BUSH MOTOR	1	1								
23	12010125	ARANDELA A21	WASHER A21	4	4								
24	12009849	TORNILLO EXAG.M.20x110	HEX. SCREW M.20x110	2	2								
25	12009952	TUERCA EXAG.AUTOBL.M.20	HEX. BOLT AUTOBL.M.20	2	2								

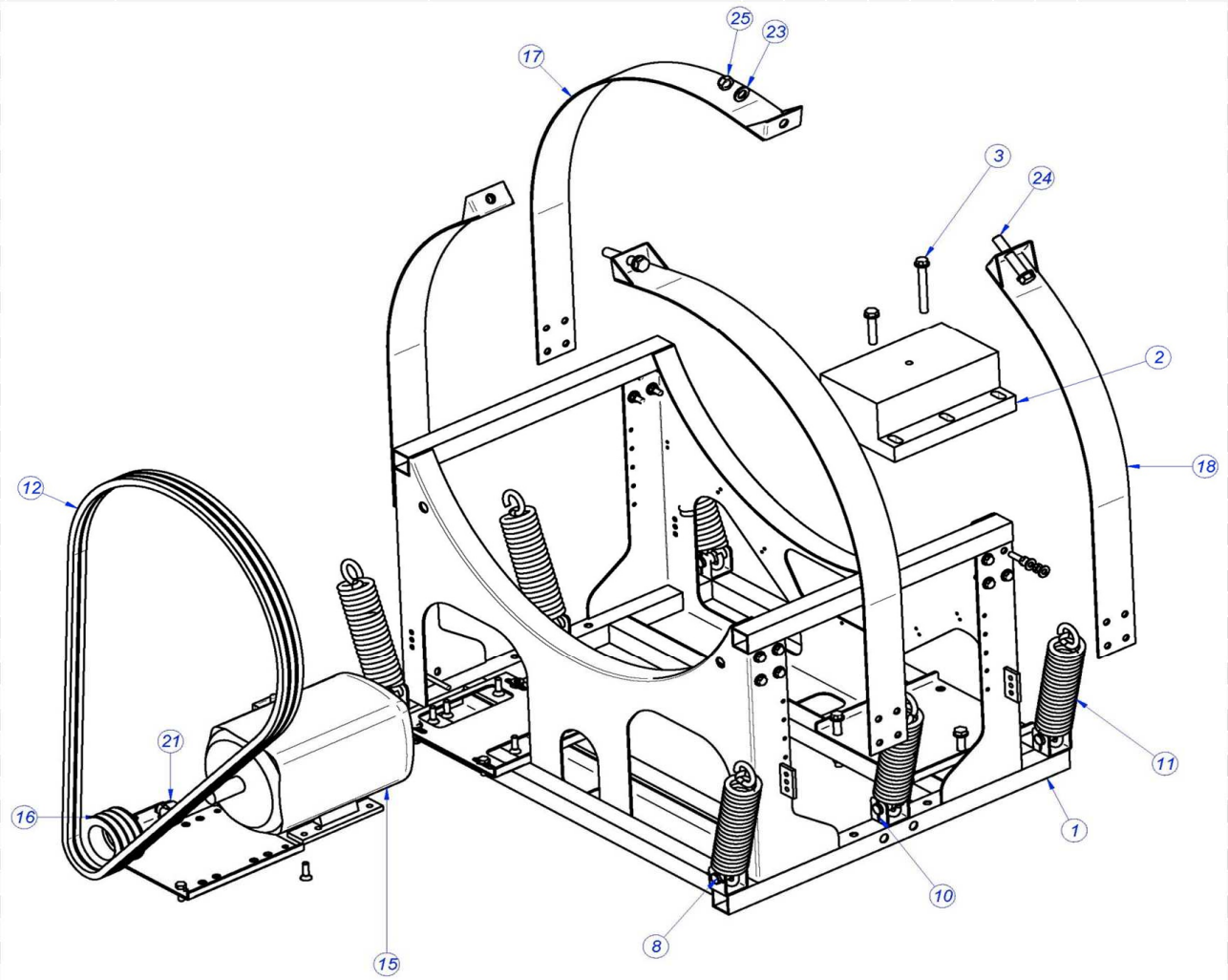

	CUBA / TUB	LÁMINA / DRAWING		FAGOR

ITEM	REFERENCIA REFERENCE	DENOMINACIÓN	DENOMINATION	LA-45 TP	LA-60 TP						RECOMMENDED	ELIMINADO ELIMINATED	INTRODUCIDO INTRODUCED
1	12092832	CUBA 45 COMPLETA	COMPLETE TUB 40 V3	1	_								
1	12004151	CUBA COMPLETA 60 V3	COMPLETE TUB 60 V3	_	1								
2	12023280	CONTRAPESO ANTERIOR 45	FRONT COUNTERWEIGHT 45	1	_								
2	12023179	CONTRAPESO ANTERIOR 60	FRONT COUNTERWEIGHT 60	_	1								
3	12004047	FRENTE CUBA 40 COMPL.	COMPLETE TUB FRONT 40	1	_								
3	12004088	FRENTE CUBA 60 COMPL.	COMPLETE TUB FRONT 60	_	1								
4	Q232050000	ARANDELA A8	WASHER A8	6	6								
5	Q242050000	ARAND.ABAN. A8 A.304	SPEC. WASHER A8 A.304	12	12								
6	Q012056000	TOR.EX.M8X40	HEX. SCREW M8X40	6	6								
7	P656013000	ANILLO CUBA 40 COMPL.	COMPLETE TUB RING 40	4	_								
7	P666012000	ANILLO CUBA 60 COMPL.	COMPLETE TUB RING 60	_	4								
8	Q221347000	TUERCA EXAG.AUTOBL.M.16	HEX. BOLT AUTOBL. M16	50	50								
9	Q011399000	TORNILLO EXAG.M.16X70	HEX. SCREW M16X70	67	67								
10	P656111000	GANCHO CUBA 40	TUB HOOK 40	2	_								
10	P666015000	GANCHO CUBA 60	TUB HOOK 60	_	2								
11	P656004000	SOPORTE FONDO CUBA 40	TUB BASE SUPPORT40	1	_								
11	P666004000	SOPORTE FONDO CUBA 60	TUB BASE SUPPORT60	_	1								
12	12093549	SOP. RODAMIENTOS 40 MECANIZ.	BEARING SUPPORT 40	1	_								
12	12093640	SOP. RODAMIENTOS 60 MECANIZ.	BEARING SUPPORT 60	_	1								
12A	12092671	SOP + RODAMIENTOS 45 MONTADO	SUPP + BEARINGS 45 ASSEMBLED	1	_						X		
12A	12092685	SOP + RODAMIENTOS 60 MONTADO	SUPP + BEARINGS 60 ASSEMBLED	_	1						X		
13	P656103000	RODAMIENTO 100/55/25	BEARING 100/55/25	1	_								
13	P666101000	RODAMIENTO 190/105/36	BEARING 190/105/36	_	1								
13A	12010901	KIT RODAMIENTOS 40	BEARING KIT 40	1	_								
13A	12000234	KIT RODAMIENTOS 60	BEARING KIT 60	_	1								
14	P656102000	RODAMIENTO 160/90/30	BEARING 160/90/30	1	_								
14	P666102000	RODAMIENTO 125/70/31	BEARING 125/70/31	_	1								
15	P656025000	TAPA RODAMIENTOS 40	BEARING COVERS 40	1	_								
15	P666108000	TAPA RODAMIENTOS 60	BEARING COVERS 60	_	1								
16	Q232030000	ARANDELA A5	WASHER A5	4	4								
17	Q242030000	ARAND.ABAN. A5 A.304	SPEC. WASHER A5 A.304	4	4								
18	Q012031000	TORN.EXA. M5X10 A.304	HEX SCREW M5X10 A.304	4	4								
19	P656016000	ANILLO SEGURIDAD 100 DIN 472	SECURITY RING 100 DIN 472	1	_								
19	P666013000	ANILLO SEGURIDAD 125 DIN 472	SECURITY RING 125 DIN 472	_	1								
20	P656005000	CASQUILLO RETENES 40	COUNTER RETAINER BUSHING 40	1	_								
20	P666005000	CASQUILLO RETENES 60	COUNTER RETAINER BUSHING 60	_	1								
22	Q012057000	TORN. EXAG. M8X50 AISI 304	HEX. SCREW M8X50 AISI 304	5	5								
23	P650320000	PANEL FRONTAL 40	FRONT PANEL 40	1	_								
23	P660331000	PANEL FRONTAL 60	FRONT PANEL 60	_	1								

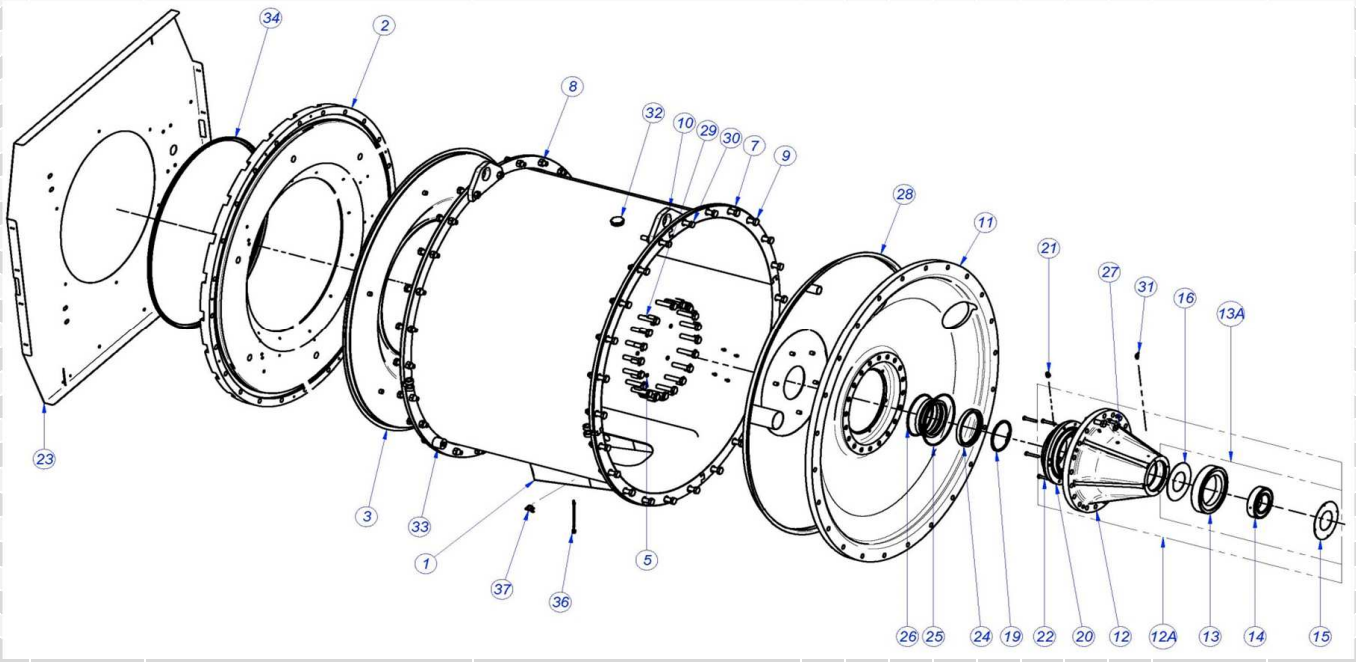

	CUBA / TUB	LÁMINA / DRAWING		FAGOR

ITEM	REFERENCIA REFERENCE	DENOMINACIÓN	DENOMINATION	LA-45 TP	LA-60 TP						RECOMMENDED	ELIMINADO ELIMINATED	INTRODUCIDO INTRODUCED
24	12023474	RETEN RADIAL 110/130/12 VITON	SEAL BAUMX7 110/130/12 VITON	3	_								
24	12023457	RETEN RADIAL BAUMX7 VITON	SEAL BAUMX7 VITON	_	3								
25	P656107000	JUNTA TORICA Ø. INT 170X5	O-RING Ø INT 170X5	1	_								
25	P666106000	JUNTA TORICA Ø. INT 200X5	O-RING Ø INT 200X5	_	1								
26	P656108000	JUNTA TORICA Ø. INT 140X5	O-RING Ø INT 140X5	1	_								
26	P666105000	JUNTA TORICA Ø. INT 160X5	O-RING Ø INT 160X5	_	1								
27	12023116	ARANDELA SEGURIDAD M16	SECURITY WASHER M16	20	20								
28	P656104000	FONDO CUBA 40 COMPL.	COMPLETE TUB BASE 40	1	_								
28	P666104000	FONDO CUBA 60 COMPL.	COMPLETE TUB BASE 60	_	1								
29	12009918	TORN.EXA. M16X70MM DIN933	HEX. SCREW M16X70MM DIN933	20	20								
30	Q151002000	TORN.EXA. M16x110 DIN 931	HEX. SCREW M16x110 DIN 931	2	2								
32	T305052000	TAPÓN DESAGÜE	DRAIN PLUG	1	1								
33	P656027000	CASQUILLO POSICION CUBA 40	POSITION BUSHING TUB 40	2	_								
33	P666018000	CASQUILLO POSICION CUBA 60	POSITION BUSHING TUB 60	_	2								
34	11000420	PERFIL A1 010 9X6 (PVC)	PROFIL A1 010 9X6 (PVC)	2	2								
35	3723100000	PERFIL JUNTA CUBA 120/60/40	TUB JOINT PROFIL 60	5	5								
36	12025036	SONDA 64KOhmio NTC	64 Kohm NTC PROBE	1	1								
37	12096597	TERM_SEG_261B_110ºC_FAST_90	SAFETY THER. 261B_110ºC_FAST_90	1	1						X		

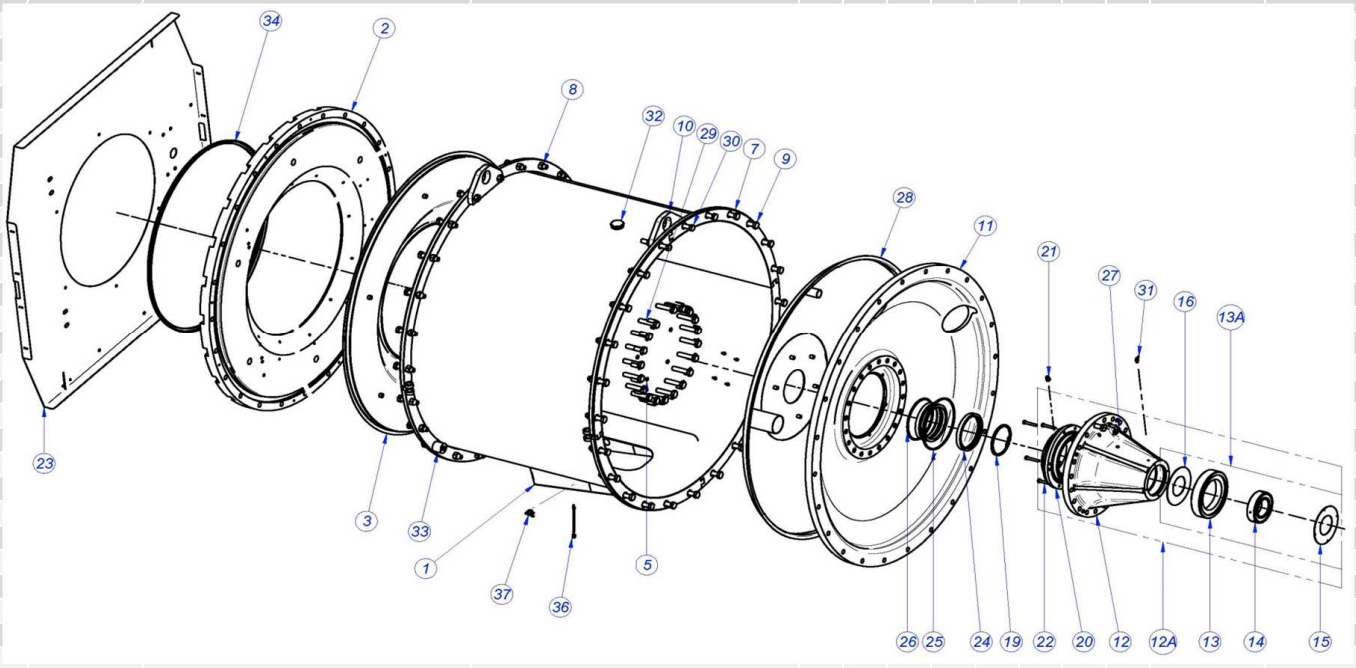

	TAMBOR / DRUM	LÁMINA / DRAWING		FAGOR

ITEM	REFERENCIA REFERENCE	DENOMINACIÓN	DENOMINATION	LA-45 TP	LA-60 TP						RECOMMENDED	ELIMINADO ELIMINATED	INTRODUCIDO INTRODUCED
1	P654905000	TAMBOR 40 COMPLETO	COMPLETE DRUM 40	1	_								
2	P654907000	GUIA RODAMIENTO 40	BEARING GUIDE40	1	_								
3	P654913000	JUNTA TORICA DIAM. INT. 65X5	O-RING GASKET DIAM. INT. 65X5	1	_								
4	P654915000	ANILLO SEGURIDAD 65 DIN 471	SAFETY RING 65 DIN 471	1	_								
6	P656015000	POLEA TAMBOR 40	DRUM PULLEY 40	1	_								
7	P666110000	RETEN V-RING VA-75 NBR	RETAINER V-RING VA-75 NBR	1	_								
8	P656024000	BUJE DE FIJACION 40	FIXING HUB 40	1	_								
9	Q301046000	ANILLO SEGURIDAD EJE 40	SHAFT SAFETY RING 40	1	_								
10	12007873	CASQUILLO EJE 40	AXIS BUSHING 40	1	_								
11	12009923	JUNTA TORICA Ø INT 90X5	O-RING SEAL Ø INT. 105X5	1	_								
1	P664917000	TAMBOR 60 COMPLETO	DRUM 60 COMPLETE	_	1								
2	P664906000	GUIA RODAMIENTO 60	BEARING GUIDE 60	_	1								
3	P664911000	JUNTA TORICA Ø INT. 65X5	O-RING SEAL Ø INT. 65X5	_	1								
4	P664915000	ANILLO SEGURIDAD 80 DIN 471	SAFETY RING 80 DIN 471	_	1								
6	P666016000	POLEA TAMBOR 60	DRUM PULLEY 60	_	1								
7	P666110000	RETEN V-RING VA-75 NBR	RETAINER V-RING VA-75 NBR	_	1								
8	P666022000	BUJE POLEA 60 TLK-110 55x71	PULLEY TAPER BUSH	_	1								
9	P666024000	ANILLO SEGURIDAD 55 DIN 471	SAFETY RING 55 DIN 471	_	1								
10	12007924	CASQUILLO EJE 60	AXIS BUSHING 60	_	1								
11	12009968	JUNTA TORICA Ø INT 105X5	O-RING SEAL Ø INT. 105X5	_	1								

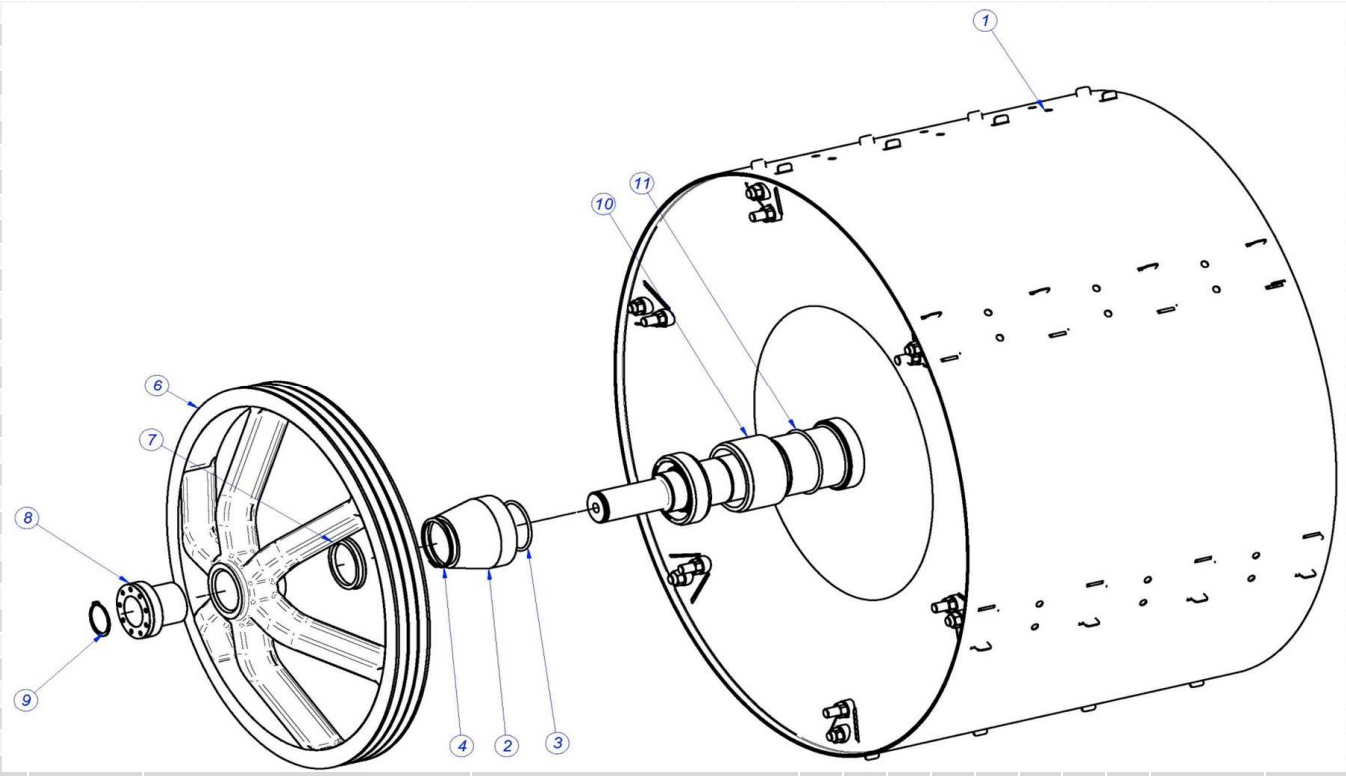

	CUBETERA / DETERGENT TRAY	LÁMINA / DRAWING		FAGOR

ITEM	REFERENCIA REFERENCE	DENOMINACIÓN	DENOMINATION	LA-45 TP	LA-60 TP						RECOMMENDED	ELIMINADO ELIMINATED	INTRODUCIDO INTRODUCED
1	12023222	CUBETERA LF-55	TRAY LF-55	1	1								
2	12023324	CUBETA DETERGENTES LF-55	DETERGENT TRAY LF-55	2	2								
3	12023326	CUBETA LIQUIDOS LF-55	LIQUID TRAY LF-55	3	3								
4	12023701	TUBO SIFON	SIPHON PIPE	3	3								
5	12022260	PASAMUROS COMPLETO	COMPLETE BUSHING	5	5								
6	12010159	JUNTA DE GOMA 3031986	RUBBER SEAL 3031986	5	5								
7	12009864	TUERCA 16X1,5	NUT 16X1.5	5	5								
8	12025092	EJE CIERRE CUBETERA	TRAY CLOSURE SHAFT	1	1								
9	12025095	CASQUILLO SEPARADOR CIERRE	CLOSURE SEPARATOR BUSHING	1	1								
10	12024461	MANGO CUBETERA	TRAY HANDLE	1	1								
11	12010187	MANGUITO SUJ.3X12 DIN1481	HOSE FAST. 3X12 DIN1481	1	1								
12	12009944	ARANDELA A5	WASHER A5	11	11								
13	12010251	TUER.AUTOB.M6	SELF-LOCK.NUT.M6	11	11								
14	12003705	PUERTA CUBETERA COMPLETA	COMPLETE TRAY DOOR	1	1								
14A	12009675	JUNTA PUERTA CUBETERA	TRAY DOOR SEAL	1	1								
15	12023589	TOPE CRISTAL INTERIOR	INTERIOR GLASS BUFFER	2	2								
16	12003380	BISAGRA CUBETERA IZDA. COMPL	LEFT TRAY HINGE COMPL.	1	1								
17	12003369	BISAGRA CUBETERA DCHA. COMPL	RIGHT TRAY HINGE COMPL.	1	1								
18	12010267	ARANDELA 16X6X1.2 A.304	WASHER 16X6X1.2 A.304	4	4								
19	12009890	ARANDELA ABANICO A5 A.304	WASHER A5 A.304	4	4								
20	12010221	TORN.EXA. M5X15 A.304	HEX BOLT M5X15 A.304	4	4								
21	12009914	ABRAZADERA 70-90	CLAMP 70-90	2	2								
22	12007746	CONDUCTO DOSIFICADOR CUBA	FILLER PIPE LC-LF 25	2	2								

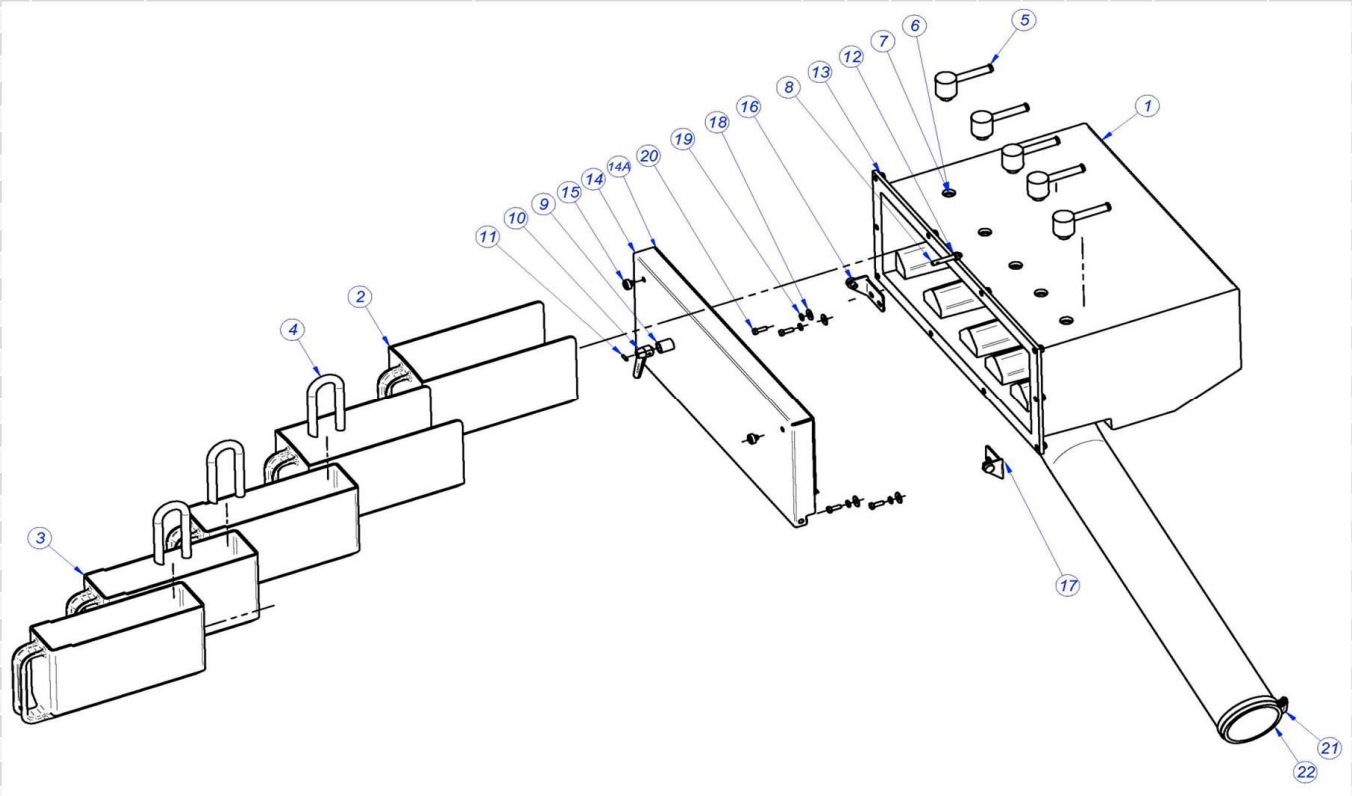

	DOSIFICADOR / DISPENSER	LÁMINA / DRAWING		FAGOR

ITEM	REFERENCIA REFERENCE	DENOMINACIÓN	DENOMINATION	LA-45 TP	LA-60 TP						RECOMMENDED	ELIMINADO ELIMINATED	INTRODUCIDO INTRODUCED
	12040599	**REP TOMA DOSIFICACIÓN COMP**	**REP DOSING INLET COMPLETE**	**1**	**1**								
1	12024392	TOMA DOSIFICACION INT. G	INN. DOSING INLET G	1	1								
2	12025227	TOMA DOSIFICACION EXTERIOR	OUTER DOSING INLET	1	1								
3	12010221	TORN.EXA. M5X15 A.304	HEX BOLT M5X15 A.304	4	4								
4	12010012	JUNTA TÓRICA 75x4	"O" RING 75x4	1	1								
5	12009890	ARANDELA ABAN. A5 A.304	WASHER A5 A.304	8	8								
6	12121485	CAPUCHON CON ROSCA SR1126	THREADED CAP SR1126	1	1								
8	12010275	TUER. AUTOB. M5	SELF-LOCK.NUT .M5	4	4								

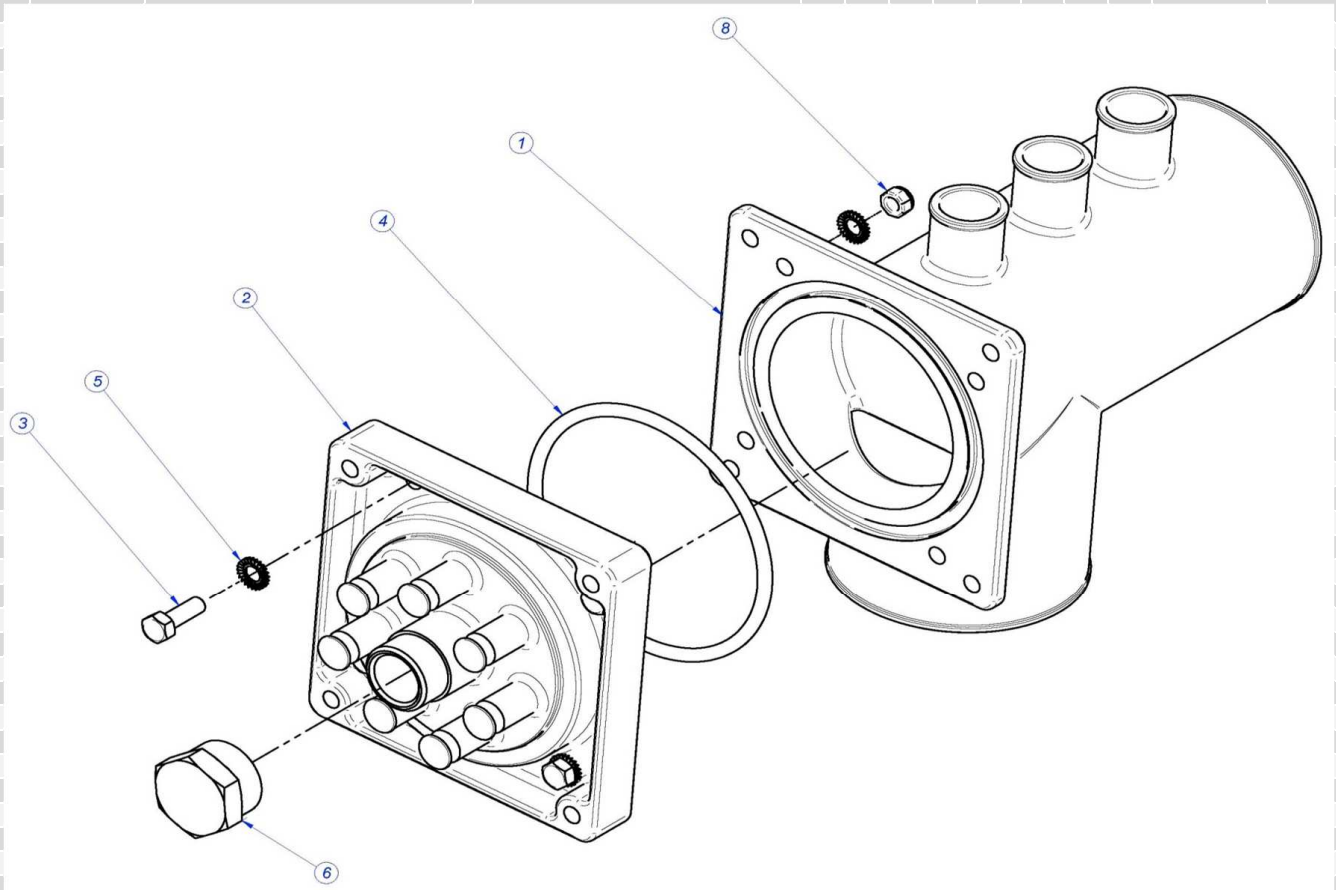

	SOPORTE E.V. / SOLENOID VALVE SUPPORT	LÁMINA / DRAWING		FAGOR

ITEM	REFERENCIA REFERENCE	DENOMINACIÓN	DENOMINATION	LA-45 TP	LA-60 TP						RECOMMENDED	ELIMINADO ELIMINATED	INTRODUCIDO INTRODUCED
1	P660306000	PANEL POST. VALVULAS 60	REAR PANEL VALVES 60	1	1								
2	12041072	VALVULA 1"	VALVE 1"	3	3						X		
3	12041075	GM 1616 UNION GAS 1"-1"	GM 1616 UNION GAS 1"-1"	3	3								
4	12024331	VALVULA VAPOR 3/4" 50-60HZ	STEAM VALVE 3/4" 50-60HZ	1	1								
5	Z102301000	MANGUITO 3/4"	HOSE 3/4"	5	5								
6	P665009000	SOPORTE VALVULA VAPOR 3/4	STEAM VALVE SUPPORT 3/4	1	1								
8	Z611123000	E.V. TRIPLE COD.255.641	E.V. TRIPLE COD.255.641	1	1						X		
9	P255001000	ELECTROVALVULA DOBLE	DOUBLE SOLENOID VALVE	1	1						X		
10	P660354000	TAPA VALVULAS 60	VALVE COVER 60	1	1								
11	12041161	SOPORTE VALVULA 1	VALVE SUPPORT 1	3	3								
12	12041719	TUBO ENTRADAS DE AGUA 1 V2	WATER INTAKE PIPE 1 V2	1	1								
13	11000410	TUBO GOMA NEGRA Ø 30x37	BLACK RUBBER PIPE Ø 30x37	3	3								
14	12041073	RACOR-MANGUERA 1"	CONNECTION-HOSE 1"	3	3								
15	Z740701000	PASAMUROS ARBOL LAVADO	WASHING SHAFT WALL BUSHING	1	1								
16	Z710708000	TUERCA PASAMUROS	WALL BUSHING NUT	1	1								
17	Q881306000	ABRAZADERA 32-50L	CLAMP 32-50L	6	6								
18	3714800000	TUBO GOMA NEGRA D 26*19	BLACK RUBBER PIPE 26*19	3	3								
19	3676900000	TUBO GOMA NEGRA D 17*10	BLACK RUBBER PIPE 17*10	5	5								
20	Q881336000	ABRAZADERA 16-27	CLAMP 16-27	11	11								
21	12040599	REP TOMA DOSIFICACIÓN COMP	REP DOSING INLET COMPLETE	1	1								
22	P535020000	TE A 90º-3/4"	T AT 90º-3/4"	1	1								
23	Q221344000	REMACHE EXAGONAL M8	HEXAGONAL RIVET M8	1	1								
24	Q232050000	ARANDELA A8	WASHER A8	1	1								
25	Q242050000	ARAND.ABAN. A8 A.304	FAN WASHER A8 A.304	1	1								
26	Z718421000	CODO M-H 3/4" LATON	L-BEND M-H 3/4" BRASS	1	1								
27	P535024000	ARANDELA TEFLON 24X15X4	WASHER TEFLON 24X15X4	2	2								
29	Q012053000	TORN.EXA. M8X20 A.304	HEX BOLT M8X20 A.304	1	1								
30	P660703000	CONDUCTO DOSIF-CUBA 40-60	TUB DISPENSER PIPE 40-60	1	1								
31	P660701000	CONDUCTO SALIDA VAPOR	STEAM OUTLET PIPE	1	1								
32	12007751	COND. REBOSADERO 40-60	LOWER OVERFLOW CO. 40-60	2	2								

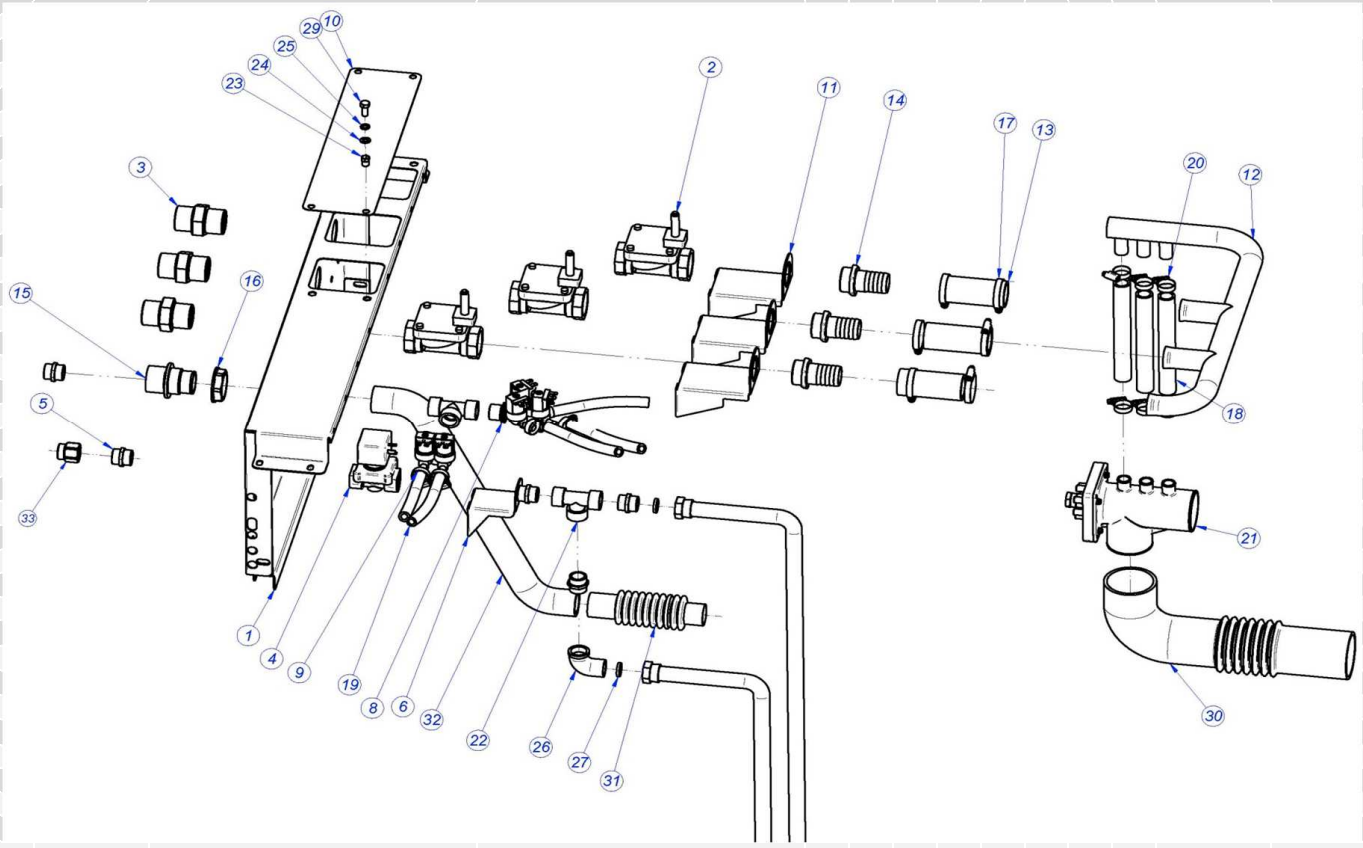

	CUADRO ELECTRICO / ELECTRICAL BOARD	LÁMINA / DRAWING		FAGOR

ITEM	REFERENCIA REFERENCE	DENOMINACIÓN	DENOMINATION	LA-45 TP	LA-60 TP						RECOMMENDED	ELIMINADO ELIMINATED	INTRODUCIDO INTRODUCED
1	12123419	PUERTA CUADRO 40-60 TP	DOOR ELECTRIC 40-60 TP	1	1								
2	12116834	SOPORTE MAIN BOARD	MAIN BOARD SUPPORT	1	1								
3	12119403	TARJETA PRINCIPAL TP (FULL)	MAIN BOARD TP (FULL)	1	1						X		
4	12116823	TRANSFORMADOR 1N 50W 240V/12V	1N 50W 240V/12V TRANSFORMER	1	1						X		
5	12023477	SECCIONADOR 63A 4VIA 2POS UL	SECTION SWITCH 63A 4VIA 2POS UL	1	1						X		
6	12041014	CONTACTOR 230V AC 50/60Hz 40A	230V AC 50/60Hz 40A CONTACTOR	1	1						X		
7	12024743	BORNE TIER 10 WPE-10103.O	TERMINAL TIER 10 WPE-10103.O	1	1								
9	12025180	REGLETA BORNAJE 2 PISOS	TERMINAL STRIP 2 PISOS	14	14								
10	12025158	BORNAS PORTA FUSIBLES	FUSE HOLDER TERMINALS	2	2								
11	12128263	SENSOR DE PRESION 100MBAR	100MBAR PRESSURE SENSOR	1	1						X		
12	12024660	PASA CABLES	CABLE PROTECTOR	20	20								
13	12023862	VENTILADOR 230V.50-60HZ	FAN 230V.50-60HZ	2	2						X		
14	12025058	BISAGRA AUTOSERVICIO	SELF-SERVICE HINGE	3	3								
15	12024998	CERRADURA 0185	LOCK 0185	3	3								
17	12024196	CONTACTOR 230V AC 50/60Hz 60A	230V AC 50/60Hz 60A CONTACTOR	2	2						X		
18	12024645	RESISTENCIA TANQUE	TANK RESISTOR	1	1						X		
19	12139986	REP. VARIADOR 45 PROGRAMADO	REP. INVERTER 45 PROGRAMMED	1	_						X		
19	12139987	REP. VARIADOR 60 PROGRAMADO	REP. INVERTER 60 PROGRAMMED	_	1						X		

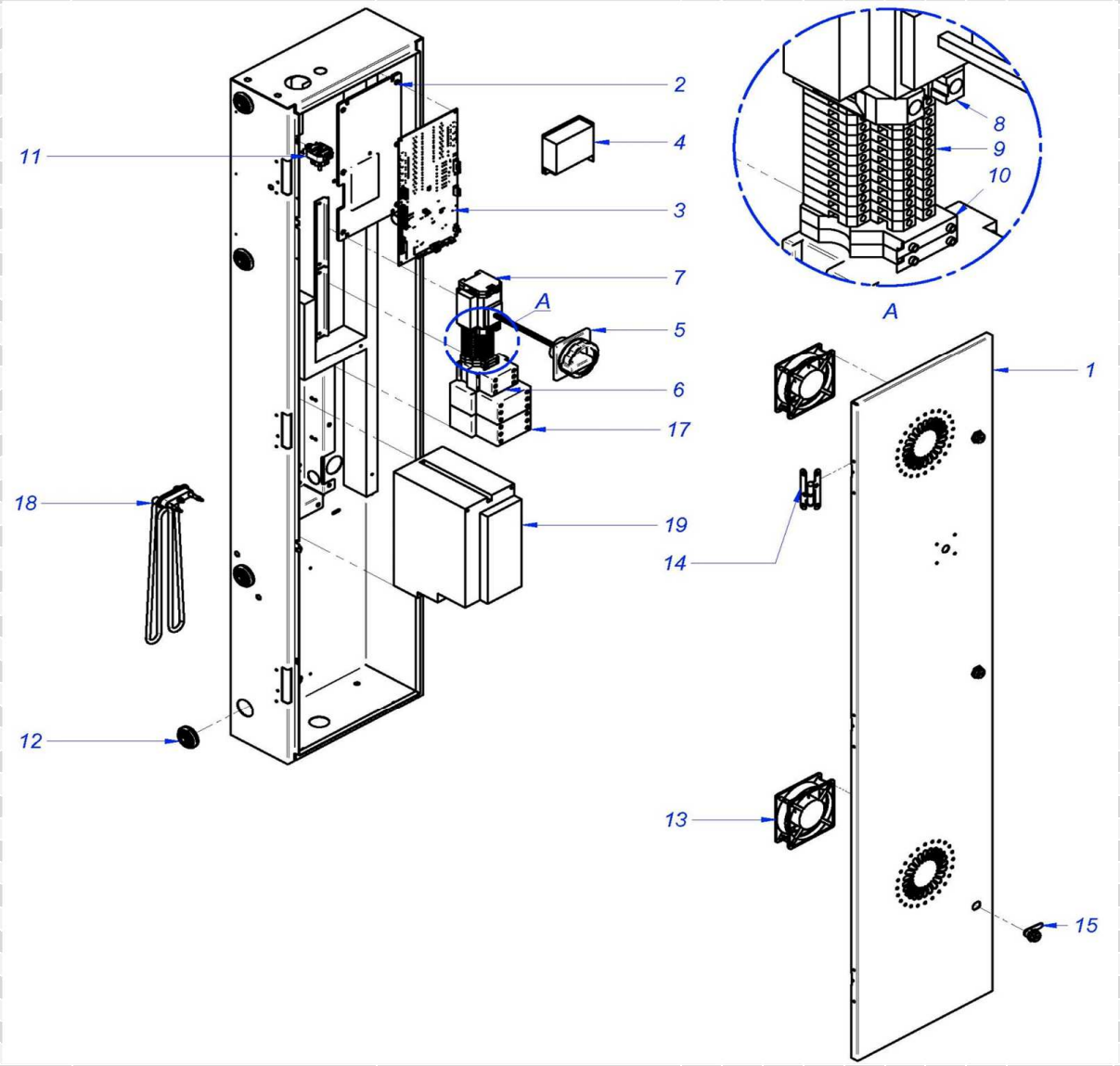

	CALENTAMIENTO / HEATING	LÁMINA / DRAWING		FAGOR

ITEM	REFERENCIA REFERENCE	DENOMINACIÓN	DENOMINATION	LA-45 TP E	LA-45 TP HW	LA-45 TP S	LA-60 TP E	LA-60 TP HW	LA-60 TP S		RECOMMENDED	ELIMINADO ELIMINATED	INTRODUCIDO INTRODUCED
1	12021528	INYECTOR VAPOR 120	STEAM INJECTOR 120	_	_	1	_	_	1		X		
2	12024645	RESISTENCIA 230V 2.800KW 370	RESISTOR 230V 2.800KW 370	1	1	1	1	1	1				
2	12024214	RESISTENCIA 230 W. VER. ELECT.	RESISTOR 230 W ELECTRIC VE.	3	1	_	_	_	_				
2	12024721	RESISTENCIA 220/240 VER. ELEC.	RESISTOR 220/240 ELECTRIC V	_	_	_	3	1	_				
3	12003769	BRIDA-ROSCA INYECTOR (VAPOR)	BRIDLE-THREAD INJECTOR ST.	_	_	1	_	_	1				
4	12092832	CUBA COMPLETA 45	COMPLETE TUB 45	1	1	1	_	_	_				
4	12004151	CUBA COMPLETA 60 V3	COMPLETE TUB 60 V3	_	_	_	1	1	1				
5	12010040	JUNTA TORICA 67.18x56.25x5,3	O-RING 67.18x56.25x5,3	3	3	3	3	3	3				
6	12024823	BRIDA-CIEGA (VERSI. AC Y VAPOR)	BRIDLE-BLINDE (VE. AC/STEAM)	_	3	2	_	3	2				
7	12024282	CAPERUZA RESISTENCIA	RESISTOR HOOD	3	1	_	3	1	_		X		
10	12024833	CONDUCTO REBOSADERO 25	OVERFLOW PIPE 25	2	2	2	2	2	2				
11	12024073	CAMARA PRESOSTATO	PRESSURE SWITCH	1	1	1	1	1	1				
12	11000066	TUBO GOMA NEGRO Ø 8*4	BLACK RUBBER PIPE Ø 8*4	3	3	3	3	3	3				
13	12009986	ABRAZADERA 32-50L	CLAMP 32-50L	6	6	6	6	6	6				
14	12025034	ADAPTADOR 1 1/4 - 3/4	ADAPTTING 1 1/4 - 3/4	_	_	1	_	_	1				
16	12023892	MANGUERA VAPOR CONICA 40-60	STEAM HOSE CONE 40-60	_	_	1	_	_	1				

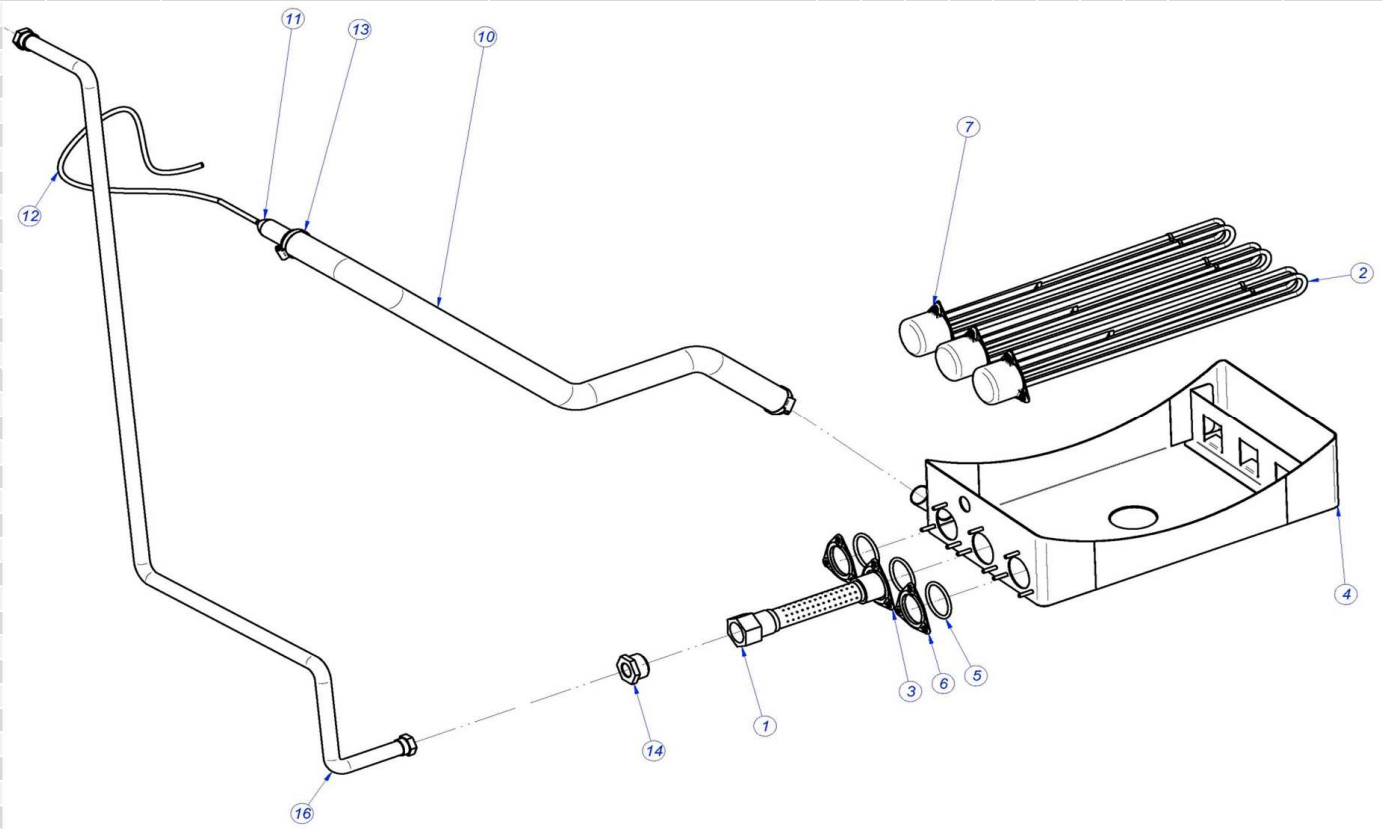

	KIT BASCULACION / TILTING KIT	LÁMINA / DRAWING		FAGOR

ITEM	REFERENCIA REFERENCE	DENOMINACIÓN	DENOMINATION	LA-60 TP							RECOMMENDED	ELIMINADO ELIMINATED	INTRODUCIDO INTRODUCED
	19005593	**KIT BASCULACION**	**TILTING KIT**										
1	12023438	TUBO AMARRE ACTUADOR 60	SWITCH FASTENING PIPE 60	2									
2	12039051	PLACA COJIN 60 SUB	PAD PLATE 60 SUB	2									
3	12021773	LISTON MUEBLE LAT.60	SIDE UNIT STRIP 60	4									
4	12021563	PROT. LATERAL MUEBLE 60	SIDE UNIT FRONT. 60	2									
5	12008826	PITON SOPORTE	SPIKE SUPPORT	2									
6	12001350	SOP. TRAVESAÑOS BASCULACION	SUPPORT TILTING CROSSBARS	4									
7	12023217	BASE ARMAZON 120	FRAME BASE 120	4									
8	12046945	LATERAL PLANTILLA BASCULA.60	TILTING TEMPLATE SIDE 60	2									
9	12025088	CASQUILLO SELFOIL ARMAZON120	FRAME SELFOIL BUSHING 120	4									
10	12023305	AMORTIGUADOR 2 ONDAS 60	2 WAVE DAMPER 60	2									
11	12007483	SOP. MICRO BASCULACION 120	TILTING MICRO SUPPORT 120	2									
12	12024834	FINAL DE CARRERA	LIMIT SWITCH	2									
13	12024238	RESOR.TENSOR MOTOR VF-6A000B1	MOTOR TENSOR SPRING VF-6A000B1	2									
14	12021566	PROTECTOR FRONTAL 60	FRONT PROTECTOR 60	1									
15	12046943	FRONTAL PLANTILLA BASCUL. 60	TILTING TEMPLATE FRONT 60	2									
16	12009618	TOPE TRASERO BASCULACION	TILTING BUFFER	2									
17	12024963	PATA LAVADORAS 10,13,18,25	WASHERS LEG 10,13,18,25	2									

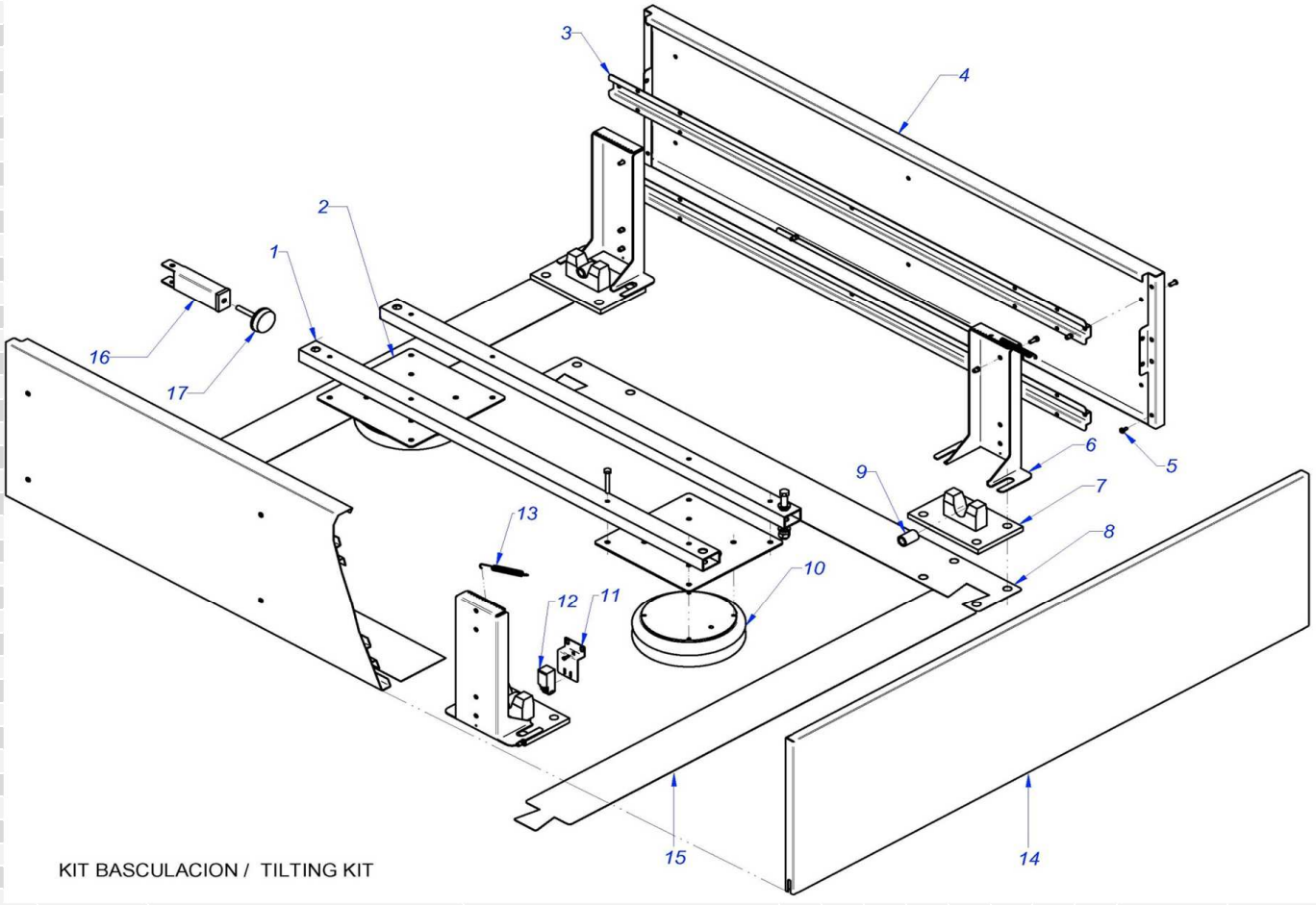

KIT BASCULACION / TILTING KIT

	KIT ELECTRICO BASCULACION / TILTING KIT ELECTRIC	LÁMINA / DRAWING		FAGOR

ITEM	REFERENCIA REFERENCE	DENOMINACIÓN	DENOMINATION	LA-60 TP							RECOMMENDED	ELIMINADO ELIMINATED	INTRODUCIDO INTRODUCED
1	**12023482**	**LOTE EXTREMOS 6MM 3530071**	**LOT ENDS 6MM 3530071**	1									
2	12023376	ELECTROVALVULA 230V AC 50Hz 1vía A	SOLENOID VALVE 230V AC 50Hz 1way Ai	2							X		
3	12009778	RACOR RAPIDO 1/4 - 6	RAPID CONNECTION 1/4 - 6	4									
4	12009776	RACOR RAPIDO 1/4 - 4	RAPID CONNECTION 1/4 - 4	2									
5	12009749	RACOR T HEMBRA 1/4	FEMALE T CONNECTION 1/4	2									
6	12009835	UNION MM 1/4	JOINT MM 1/4	3									
7	12007901	PRESOSTATO 400-4.000,00bar Simple	PRESSURE SWITCH 400-4000 bar Simple	2									
8	12024012	CONTACTOR 230V AC 50/60Hz 16A 4via	CONTACTOR 230V AC 50/60Hz 16A 4-wa	3							X		
9	12009811	REDUCCION RC1/4-3/8	REDUCTION RC1/4-3/8	2									
10	12023385	FILTRO REGULADOR DE AIRE	AIR FILTER REGULATOR	1							X		
11	12120814	TARJETA AUXILIAR TP (KITS)	AUXILIAR BOARD TP (KITS)	2							X		
12	12009702	EJE TOPE PUERTA BASCULACION	TILTING DOOR BUFFER SHAFT	1									
13	12008955	POMO M6 (ELESA-REF. 23901)	KNOB M6 (ELESA-REF. 23901)	1									
14	12003365	BOTONERA COMPLETA	COMPLETE BUTTON CONTROL PANEL	1									
15	12009652	SOPORTE IMAN BASCULACION	TILTING MAGNET SUPPORT	1									
16	12007740	IMAN MANDO BASCULACION	TILT CONTROL MAGNET	1									
17	12009783	TAPON PLASTICO HEMBRA M30X2	FEMALE PLASTIC PLUG M30X2	1									
18	12009851	PRENSAESTOPA PG 29 D38	PACKING GLAND PG 29 D38	2									
S/Nº	11000163	TUBO NEUM. 4X2.5 (P685023)	PNEUM. PIPE 4X2.5 (P685023)	1									
S/Nº	11000112	TUBO NEUM. 6X4 (P685021)	PNEUM. PIPE 6X4 (P685021)	5									
	12007631	MANUAL INSTALACION TILTING SYS	MANUAL INSTALLATION TILTING SYS	1									

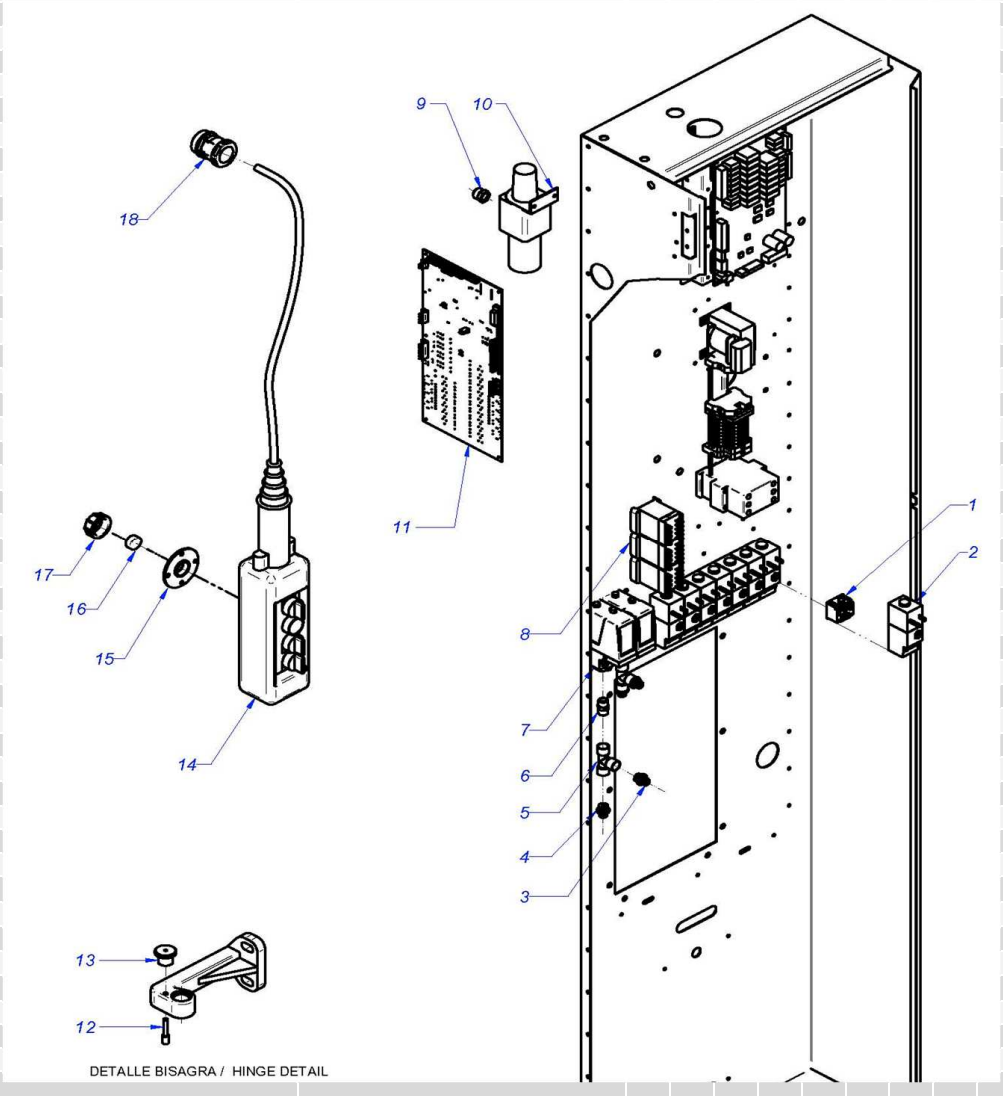

DETALLE BISAGRA / HINGE DETAIL

	VARIOS / VARIOUS		LÁMINA / DRAWING		FAGOR

ITEM	REFERENCIA REFERENCE	DENOMINACIÓN	DENOMINATION	LA-45 TP	LA-60 TP						RECOMMENDED	ELIMINADO ELIMINATED	INTRODUCIDO INTRODUCED
	12123234	INSTALACIÓN ELECT. 45A, 60A	ELEC. INSTALLATION 45A, 60A	1	1								
	12007984	CABLEADO CALENTAMIENTO-40,60	HEATING WIRING 40, 60	1	1								
	12024862	CABLEADO MOTOR 40, 60	ENGINE WIRING 40, 60	1	1								
	12120274	CABLEADO PTC+R UL	PTC+R UL WIRING BRIDGE	1	1						X		
	12025207	CABLE MICRO DESEQUILIBRIO	UNBALANCE MICRO WIRE	1	1								

	KIT DESMONTAJE RODAMIENTOS / KIT BEARINGS UNASSEMBL	LÁMINA / DRAWING		FAGOR

ITEM	REFERENCIA REFERENCE	DENOMINACIÓN	DENOMINATION	LA-60 TP							RECOMMENDED	ELIMINADO ELIMINATED	INTRODUCIDO INTRODUCED
	12007976	COLUMNA SOP. DESMONT. 40-60		2									
	12009606	PATA DESLIZANTE		2									
	12007965	PUENTE DESMONTAJE. 40-60		2									
	12007998	SOP. PUENTE DESMONTAJE 60		2									
	12007956	RUEDAS SOP. RODAMIENTOS 60		2									
	12007896	PUENTE SOP. RODAMIENTOS 60		1									
	12007895	PUENTE SOP. RODAMIENTOS 40		1									
	12010507	PLETINA TOPE 60		8									
	12024963	PATA LAVADORAS 10,13,18,25		2									
	12007981	TRAVESAÑO DESMONTAJE 40-60		1									
	12008002	RUEDA PALET DESMONTAJE		4									
	12010031	Tr c/hex Fe Zn M12X70MM DIN933		30									
	12010144	Tc autobloc. Fe Zn M12 DIN985		30									
	12010077	Ar plana Fe Zn 12MM DIN125		60									
	12009849	Tr c/hex Fe Zn M20X110MM DIN931		4									
	12009952	Tc autobloc. Fe Zn M20 DIN985		4									
	12007959	VARILLA SOPORTE 60		4									
	12007969	ESPARRAGO GUIA 60		2									
	12007852	SOPORTE EXTRACTOR 60		3									
	12007851	VARILLA TAMBOR 60		1									
	12009957	Tc Hex Inox M16 DIN934		14									
	12007827	CASQUILLO GUIA RODAMIENTO 60		1									
	12007857	CASQUILLO GUIA RODAMIENTO 40		1									
	12000887	CIL. APOYO EXTRAC. ROD. 60		1									
	12007837	CIL. APOYO EXTRAC. ROD. 40		1									
	12009370	INTRODUCTOR ROD. MENOR 60		1									
	12007902	INTRODUCTOR ROD. MENOR 40		1									
	12007887	EXTRACTOR ROD. MENOR 60		1									
	12007910	EXTRACTOR ROD. MENOR 40		1									
	12007836	INTRODUCTOR ROD. MAYOR 60		1									
	12007829	INTRODUCTOR ROD. MAYOR 40		1									
	12007829	INTRODUCTOR ROD. MAYOR 40		1									
	12007816	CIL. INTRODUCTOR TAMBOR 60		1									
	12007925	CIL. INTRODUCTOR TAMBOR 40		1									
	12007939	BASE BOMBA EXTRACCION		1									
	12007919	AMARRE ABRAZADERA		1									
	12009639	APOYO TENSOR		3									
	12025037	TENSOR		3									
	12007794	SOPORTE TENSORES		1									
	12010000	TUERCA EXAG. M20 DIN 934 ZINC.		2									
	12007764	EMPUJADOR CASQUILLOS 60		1									
	12007826	ADAPTADOR EMPUJADOR 40		1									
	12007907	GUIA SOP. RODAMIENTOS 40		1									
	12007877	GUIA SOP. RODAMIENTOS 60		1									
	12010375	CAJA KIT BASC. FRONT. 60/12		1									

	RECOMENDADOS / RECOMMENDED	LÁMINA / DRAWING		FAGOR

ITEM	REFERENCIA REFERENCE	DENOMINACIÓN	DENOMINATION	LA-45 TP	LA-60 TP							CONJUNTO FUNCIONAL / FUNCTIONAL PART
11	P532103000	VALVULA VACIADO	DRAIN VALVE	1	1							MUEBLE / CABINET
15	12120238	SOPORTE SETA EMERGENCIA	EMERGENCY STOP SUPPORT	1	1							MUEBLE / CABINET
16	12120237	PULSAD. 250V AC 16A 1VIA 2POS UL	250V AC 16A 1WAY 2POS UL SWITCH	1	1							MUEBLE / CABINET
17	12120235	SETA DE EMERGENCIA	EMERGENCY STOP BUTTON	1	1							MUEBLE / CABINET
18	12115334	ADHESIVO COLUMNAS TP FAGOR	COLUMN ADHESIVE TP FAGOR	1	1							MUEBLE / CABINET
20	12119488	DISPLAY TP	DISPLAY TP	1	1							MUEBLE / CABINET
21	12120404	TARJETA DISPLAY TFT	TFT DISPLAY CARD	1	1							MUEBLE / CABINET
4	P613002000	ELECTROIMAN PUERTA	DOOR ELECTROMAGNET	1	1							CIERRE / LOCK
18	12138167	BLOQUEO CIERRE 40,60,120	CLOSURE LOCK 40,60,120	1	1							CIERRE / LOCK
20	P620526000	INTERRUPTOR PUERTA PLANO	FLAT DOOR SWITCH	2	2							CIERRE / LOCK
12	12023243	CORREA 40 SPB 2840	BELT 40 SPB 2840	3	_							CUNA / CRADLE
12	12023241	CORREA 60 SPB 3000	BELT 60 SPB 3000	_	3							CUNA / CRADLE
15	12023185	MOTOR 7,15KW	MOTOR 7,15KW	1	_							CUNA / CRADLE
15	12023183	MOTOR 11KW	MOTOR 11KW	_	1							CUNA / CRADLE
12A	12092671	SOP + RODAMIENTOS 45 MONTADO	SUPP + BEARINGS 45 ASSEMBLED	1	_							CUBA / TUB
12A	12092685	SOP + RODAMIENTOS 60 MONTADO	SUPP + BEARINGS 60 ASSEMBLED	_	1							CUBA / TUB
37	12096597	TERM_SEG_261B_110ºC_FAST_90	SAFETY THER. 261B_110ºC_FAST_90	1	1							CUBA / TUB
2	12041072	VALVULA 1"	VALVE 1"	3	3							SOP. E.V. / E.V SUPP.
8	Z611123000	E.V. TRIPLE COD.255.641	E.V. TRIPLE COD.255.641	1	1							SOP. E.V. / E.V SUPP.
9	P255001000	ELECTROVALVULA DOBLE	DOUBLE SOLENOID VALVE	1	1							SOP. E.V. / E.V SUPP.
3	12119403	TARJETA PRINCIPAL TP (FULL)	MAIN BOARD TP (FULL)	1	1							C. ELEC. / ELEC. BOARD
4	12116823	TRANSFORMADOR 1N 50W 240V/12V	1N 50W 240V/12V TRANSFORMER	1	1							C. ELEC. / ELEC. BOARD
5	12023477	SECCIONADOR 63A 4VIA 2POS UL	SECTION SWITCH 63A 4VIA 2POS UL	1	1							C. ELEC. / ELEC. BOARD
6	12041014	CONTACTOR 230V AC 50/60Hz 40A	230V AC 50/60Hz 40A CONTACTOR	1	1							C. ELEC. / ELEC. BOARD
11	12128263	SENSOR DE PRESION 100MBAR	100MBAR PRESSURE SENSOR	1	1							C. ELEC. / ELEC. BOARD
13	12023862	VENTILADOR 230V.50-60HZ	FAN 230V.50-60HZ	2	2							C. ELEC. / ELEC. BOARD
17	12024196	CONTACTOR 230V AC 50/60Hz 60A	230V AC 50/60Hz 60A CONTACTOR	2	2							C. ELEC. / ELEC. BOARD
18	12024645	RESISTENCIA TANQUE	TANK RESISTOR	1	1							C. ELEC. / ELEC. BOARD
19	12139986	REP. VARIADOR 45 PROGRAMADO	REP. INVERTER 45 PROGRAMMED	1	_							C. ELEC. / ELEC. BOARD
19	12139987	REP. VARIADOR 60 PROGRAMADO	REP. INVERTER 60 PROGRAMMED	_	1							C. ELEC. / ELEC. BOARD
1	12021528	INYECTOR VAPOR 120	STEAM INJECTOR 120	1	1	MODELOS S MODELS						CALENT. / HEATING
7	12024282	CAPERUZA RESISTENCIA	RESISTOR HOOD	3	3	MODELOS E MODELS						CALENT. / HEATING

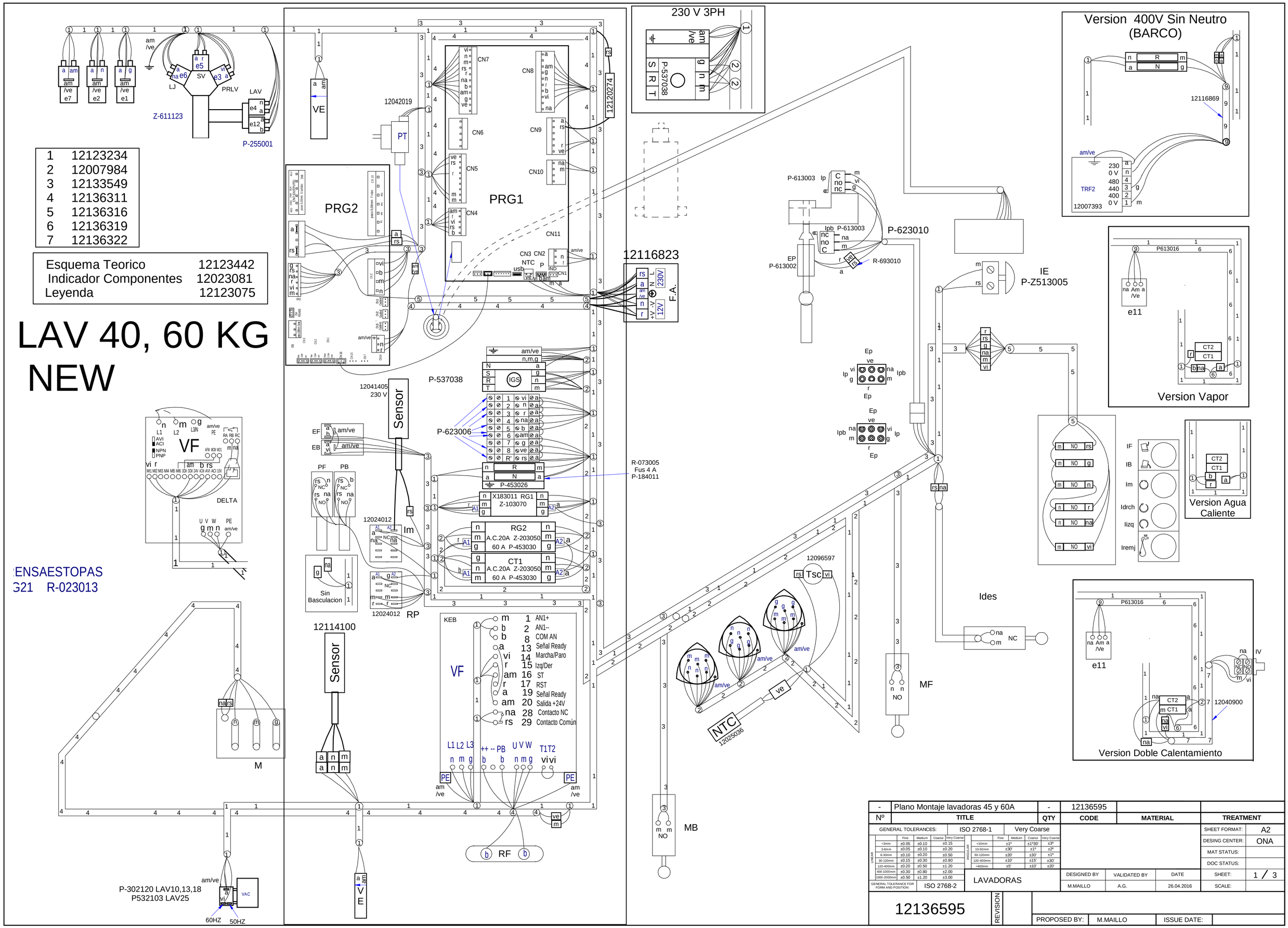

Nº	TITLE	QTY	CODE	MATERIAL	TREATMENT
-	Plano Montaje lavadoras 45 y 60A	-	12136595		

GENERAL TOLERANCES: ISO 2768-1 Very Coarse

LINEAR	Fine	Medium	Coarse	Very Coarse
<3mm	±0.05	±0.10	±0.15	
3-6mm	±0.05	±0.10	±0.20	
6-30mm	±0.10	±0.20	±0.50	
30-120mm	±0.15	±0.30	±0.80	
120-400mm	±0.20	±0.50	±1.20	
400-1000mm	±0.30	±0.80	±2.00	
1000-2000mm	±0.50	±1.20	±3.00	

GENERAL TOLERANCE FOR FORM AND POSITION: ISO 2768-2

ANGULAR	Fine	Medium	Coarse	Very Coarse
<10mm	±1°	±1°30'	±3°	
10-50mm	±30'	±1°	±2°	
50-120mm	±20'	±30'	±1°	
120-400mm	±10'	±15'	±30'	
>400mm	±5'	±10'	±20'	

LAVADORAS

DESIGNED BY	VALIDATED BY	DATE
M.MAILLO	A.G.	26.04.2016

SHEET FORMAT:	A2
DESING CENTER:	ONA
MAT STATUS:	
DOC STATUS:	
SHEET:	1 / 3
SCALE:	

12136595

REVISION

PROPOSED BY: M.MAILLO ISSUE DATE:

LAV 120, 60, 40 kg BASCULANTE

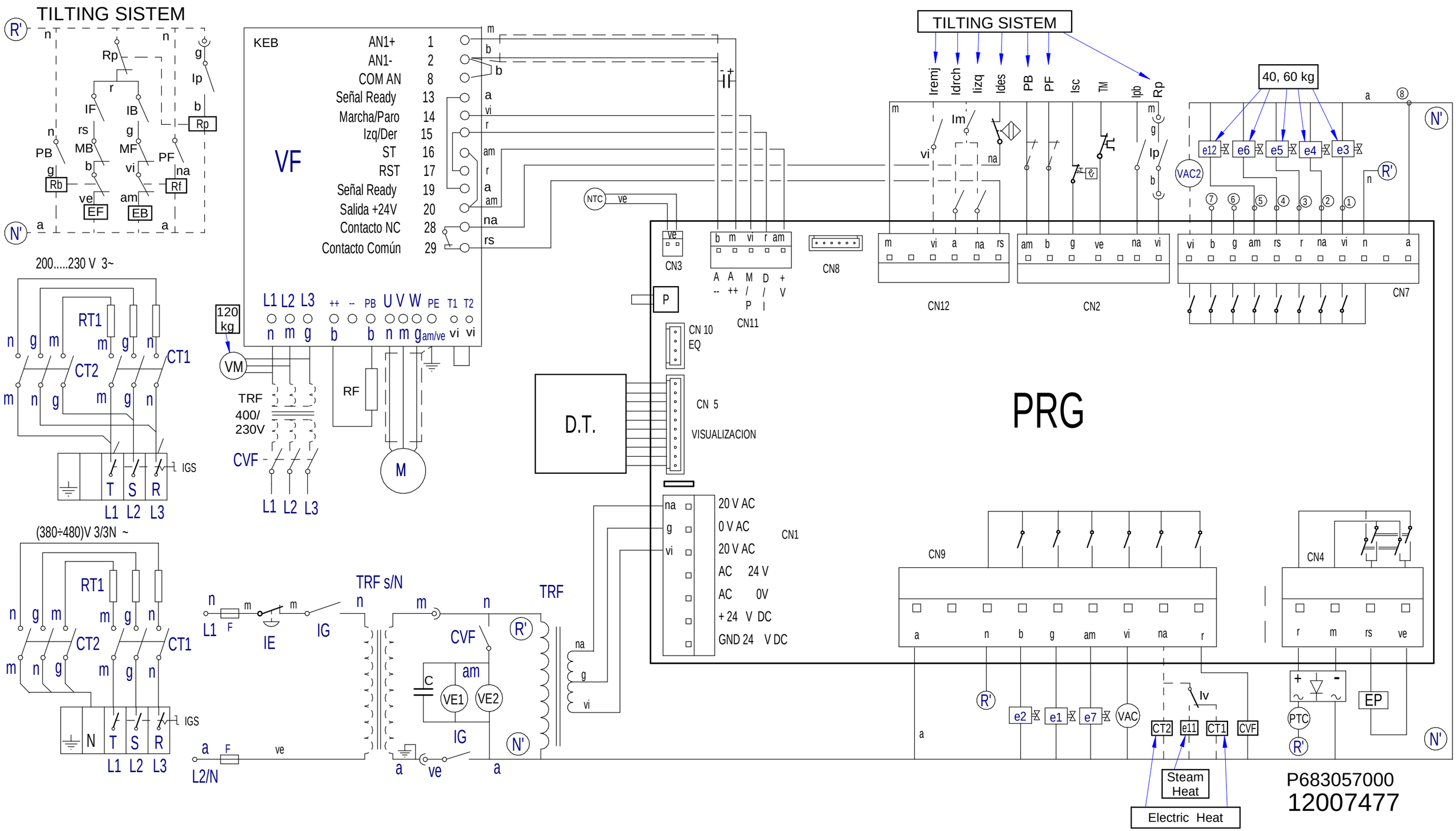

Simb / LENG		ESPAÑOL	ENGLISH	FRANÇAIS	DEUTSCH	ITALIANO
CT1, CT2	=	Contactor Calentamiento	Heating Contactor	Contacteur Chauffe	Heizschütz	Contatore Riscaldamento
CVF	=	Contactor Variador	Converter Contactor	Contacteur Convertisseur	Schütz Frequenzumwandler	Contactore Convertitore
5	=	Dosificador Neutralizante.	Neutralizer feeder	Doseur Neutralisant	Dosiervorrichtung Neutralspülmittel	Dosatore Neutralizzante
6	=	Dosificador jabon liquido.	Liquid soap feeder	Doseur lessive liquide	Dosiervorrichtung Flüssigseife	Dosatore sapone liquido
7	=	Dosificador aditivos.	Additive feeder	Doseur additifs	Dosiervorrichtung Zusatzmittel	Dosatore additivi
D.T.	=	Display/Teclado	Display/Keyboard	Écran/Clavier	Display/Tastatur	Display/Tastiera
e1	=	Electro válvula agua Fria.	Cold water electrically operated valve	Électrovanne eau Froide	Elektroventil Kaltwasser	Elettrovalvola acqua Fredda
e2	=	Electro válvula agua Caliente	Hot water electrically operated valve	Électrovanne eau Chaude	Elektroventil Warmwasser	Elettrovalvola acqua Calda
e3	=	Electro válvula Prelavado.	Pre-wash electrically operated valve	Électrovanne Prélavage	Elektroventil Vorwaschen	Elettrovalvola Prelavaggio
e4, e41	=	Electro válvula Lavado.	Wash electrically operated valve	Électrovanne Lavage	Elektroventil Hauptwaschgang	Elettrovalvola Lavaggio
e5	=	Electro válvula Lejía.	Bleach electrically operated valve.	Électrovanne Eau de Javel	Elektroventil Bleiche	Elettrovalvola Candeggina
e6	=	Electro válvula Suavizante.	Fabric softener electrically operated valve	Électrovanne Assouplissant	Elektroventil Weichspüler	Elettrovalvola Ammorbidente
e7	=	Electro válvula agua Descalcificada	Delimed water electrically operated valve	Électrovanne eau Adoucie	Elektroventil entkalktes Wasser	Elettrovalvola acqua Decalcificata
e11	=	Electro válvula Vapor.	Steam electrically operated valve	Électrovanne Vapeur	Elektroventil Dampf	Equilibrado Vapore
EB	=	Electro válvula de aire Basculacion Trasera	Air Valve of the Back Tilting	Soupape à air de l'inclinaison arrière	Luftventil des rückseitigen Kippens	Valvola per aria di inclinazione posteriore
EF	=	Electro válvula de aire Basculacion Frontal	Air Valve of the Front Tilting	Soupape à air de l'inclinaison avant	Luftventil des vorderen Kippens	Valvola per aria di inclinazione anteriore
EP	=	Electroimán de Puerta.	Door electric magnet	Électro-aimant de Porte	Elektromagnet Gerätetür	Elettromagnete Porta
FI	=	Filtro de Interferencias.	Interference filter	Filtre Anti-parasites	Störungsfilter	Filtro Interferenze
F	=	Fusible.	Fuse	Fusible	Sicherung	Fusibile
IE	=	Pulsador Parada de emergencia.	Emergency stop push button	Bouton-poussoir Arrêt d'urgence	Not-Aus-Taster	Pulsante Arresto di emergenza
IG	=	Interruptor general.	General switch	Interrupteur général	Hauptschalter	Interruttore generale
IGS	=	Interruptor General de seguridad.	General safety switch	interrupteur Général de sécurité	Sicherheitshauptschalter	Interruttore Generale di sicurezza
IB	=	Interruptor Basculacion Trasero del Mando.	Back Tilting Switch of Control	Commutateur de inclinaison arrière de commande	Rückseitiger kippenschalter der Steuerung	Interruttore di inclinazione posteriore di controllo
Idrch	=	Interruptor Rotacion a Derechas del Mando	Switch of Spins to the Right of Control	Commutateur des rotations à la droite de la comm	Schalter von Drehbeschleunigungen auf der rechten Seite der Steuerung	Interruttore delle rotazioni alla destra di controllo
Ides	=	Interruptor de desequilibrio.	Unbalance switch	Interrupteur de balourd	Ungleichgewichtsschalter	Interruttore di squilibrio
IF	=	Interruptor Basculacion Frontal Mando.	Front Tilting Switch of Control	Front Tilting Switch of Contrôle	Vorderer kippenschalter der Steuerung	Interruttore di inclinazione anteriore di controllo
Iizq	=	Interruptor Rotacion a Izquierdas Mando	Switch of Left Spin of Control	Commutateur de rotation gauche de commande	Schalter der linken Drehbeschleunigung der Steuerung	Interruttore della rotazione di sinistra di controllo
Im	=	Interruptor Movimiento / parada / Mando	Stopped Motion Switch	Détecteur D'arrêt		
IMo	=	Interruptor Monedero.	Coin slote switch	Interrupteur Monnayeur	Münzschalter	Interruttore Portamonete
Ip	=	Interruptor puerta Cerrada.	Closed door switch	Interrupteur porte Fermée	Schalter Tür geschlossen	Interruttore porta Chiusa
Ipb	=	Interruptor puerta bloqueada.	Door lock switch	Interrupteur porte verrouillée	Schalter Tür verriegelt	Interruttore porta bloccata
Iremj	=	Interruptor de Remojo del Mando	Soaking Switch of Control	Commutateur de trempage de commande	Tränkender Schalter der Steuerung	Interruttore d'inzuppamento di controllo
Isc	=	Interruptor seguridad Temperatura	Hi-limit Thermostat	Thermostat Limiteur	Grenzthermostat	Termostato Limitatore
Iv	=	Interruptor Vapor	Steam Switch	Commutateur de vapeur	Dampf-Schalter	Interruttore del vapore
M	=	Motor.	Motor	Moteur	Motor	Motore
MB	=	Interruptor seguridad Basculacion Trasero.	Back Tilting Hi-limit Switch			
MF	=	Interruptor seguridad Basculacion Frontal.	Front Tilting Hi-limit Switch			
Mo	=	Monedero.	Coin slot	Monnayeur	Münzvorrichtung	Portamonete
NTC	=	Sensor temperatura.	Temperature sensor	Capteur température	Temperatursensor	Sensore temperatura
PB	=	Presostato Basculacion Trasero	Back Tilting Air Presure Low-Limit			
PF	=	Presostato Basculacion Frontal	Front Tilting Air Presure Low-Limit			
P, P2		Presostato Nivel de agua	Water Level Switch			
PRG	=	Circuito Programador.	Programmer Circuit	Circuit Programmateur	Kreislauf Programmiervorrichtung	Circuito Programmatore
PTC	=	PTC	PTC	PTC	PTC	PTC
Rb	=	Rele Basculacion Trasero	Back Tilting Relay			
Rf	=	Rele Basculacion Frontal	Front Tilting Relay			
Rm	=	Rele movimiento / Parada	Stopped Motion Relay	Relais Détecteur D'arrêt		
Rp	=	Rele Puerta	Closed door Relay	Relais porte Fermée		Rele porta Chiusa
Rpb	=	Rele Puerta Bloqueada	Door lock Relay	Relais porte verrouillée		Rele porta bloccata
RT	=	Resistencia Calentamiento.	Heating Resistors	Résistance Chauffe	Widerstand Aufheizung	Resistenza Riscaldamento
TL	=	Limitador Temperatura	Hi-limit Thermostat	Thermostat Limiteur	Grenzthermostat	Termostato Limitatore
Tm	=	Térmico de Motor.	Motor hot-wire	Thermique du Moteur	Motorwärmeschalter	Termico del Motore
Trf	=	Transformador	Transformer	Transformateur	Transformator	Trasformatore
Trf s/N	=	Transformador Versión sin Neutro.	Transformer Version without Neutral	Transformateur Version sans Neutre	Transformator Modell ohne Neutralstellung	Trasformatore Versione senza Neutro
VAC, VAC2	=	Válvula Vaciado	Emptying valve	Vanne Vidange	Ablassventil	Valvola Scarico
VE, VE1, VE2	=	Ventilador.	Fan	Ventilateur	Ventilator	Ventola
VF	=	Convertidor de Frecuencia.	Frequency converter	Convertisseur de Fréquence	Frequenzumwandler	Convertitore di Frequenza
VM	=	Ventilador Motor.	Fan motor	Ventilateur Moteur	Ventilator Motor	Ventola Motore
1...8	=	Puntos conexión dosificadores.	Feeder connection points	Points raccordement doseurs	Anschlussstellen Dosiervorrichtungen	Punti connessione dosatori
9 - 10	=	Entrada de la central de pago 24V =	Central Entrance of payment			
11 - 12	=	Salida hacia la central de pago	Exit towards Central of Payment			
COLOR	=	COLORES	COLOUR	COULEURS	FARBEN	COLORE
a	=	Azul	Blue	Bleu	Blau	Blu
am	=	Amarillo	Yellow	Jaune	Gelb	Giallo
am/ve	=	Amarillo/verde	Yellow / green	Jaune / vert	Gelb/grün	Giallo/verde
b	=	Blanco	White	Blanc	Weiß	Bianco
g	=	Gris	Grey	Gris	Grau	Grigio
m	=	Marrón	Brown	Marron	Braun	Marrone
n	=	Negro	Black	Noir	Schwarz	Nero
na	=	Naranja	Orange	Orange	Orange	Arancio
r	=	Rojo	Red	Rouge	Rot	Rosso
rs	=	Rosa	Pink	Rose	Rosa	Roseo
ve	=	Verde	Green	Vert	Grün	Verde
vi	=	Violeta	Purple	Violet	Violett	Viola
						P623014000