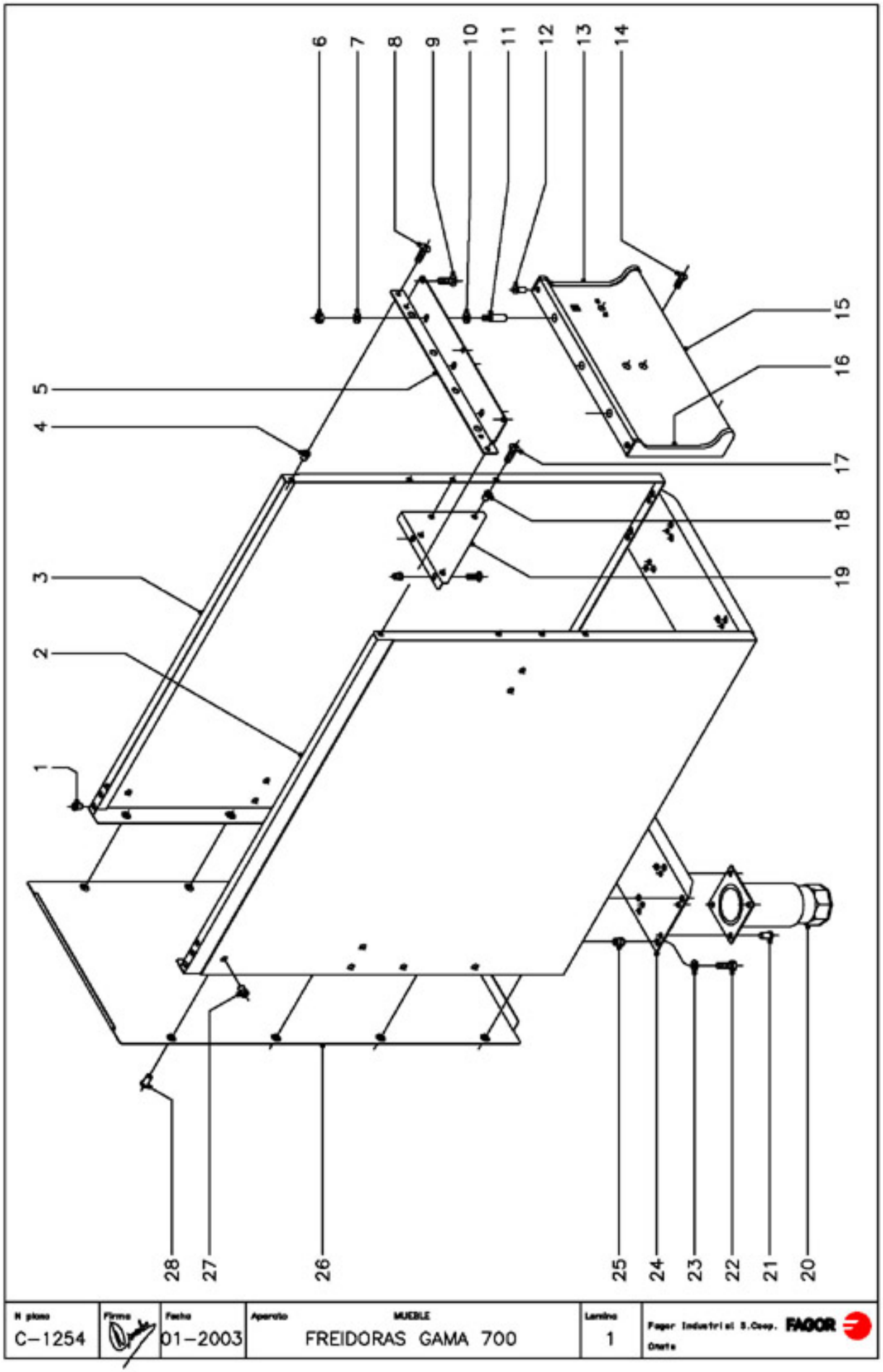

1	Q221342
2	X312831
3	X312832
4	Q221342
5	X312600
5	X332631
6	Q162040
7	Q302022
8	Q152004
9	Q152004
10	Q302022
11	Q151336
12	Q419005
13	U452804
14	Q152004
15	X322800
15	X332800
16	U452805
17	Q152004
18	Q221342
19	X322615
20	X260151
21	Q411304
22	Q012043
23	Q302022
24	X312640
24	U742640
25	Q221343
26	X312802
26	U742804
27	Q221343
28	Q419005

N plano	Firma	Fecha	Aparato	Lamina
C-1254		01-2003	MUEBLE FREIDORAS GAMA 700	1

Fagor Industrial S.Coop. FAGOR
Onate

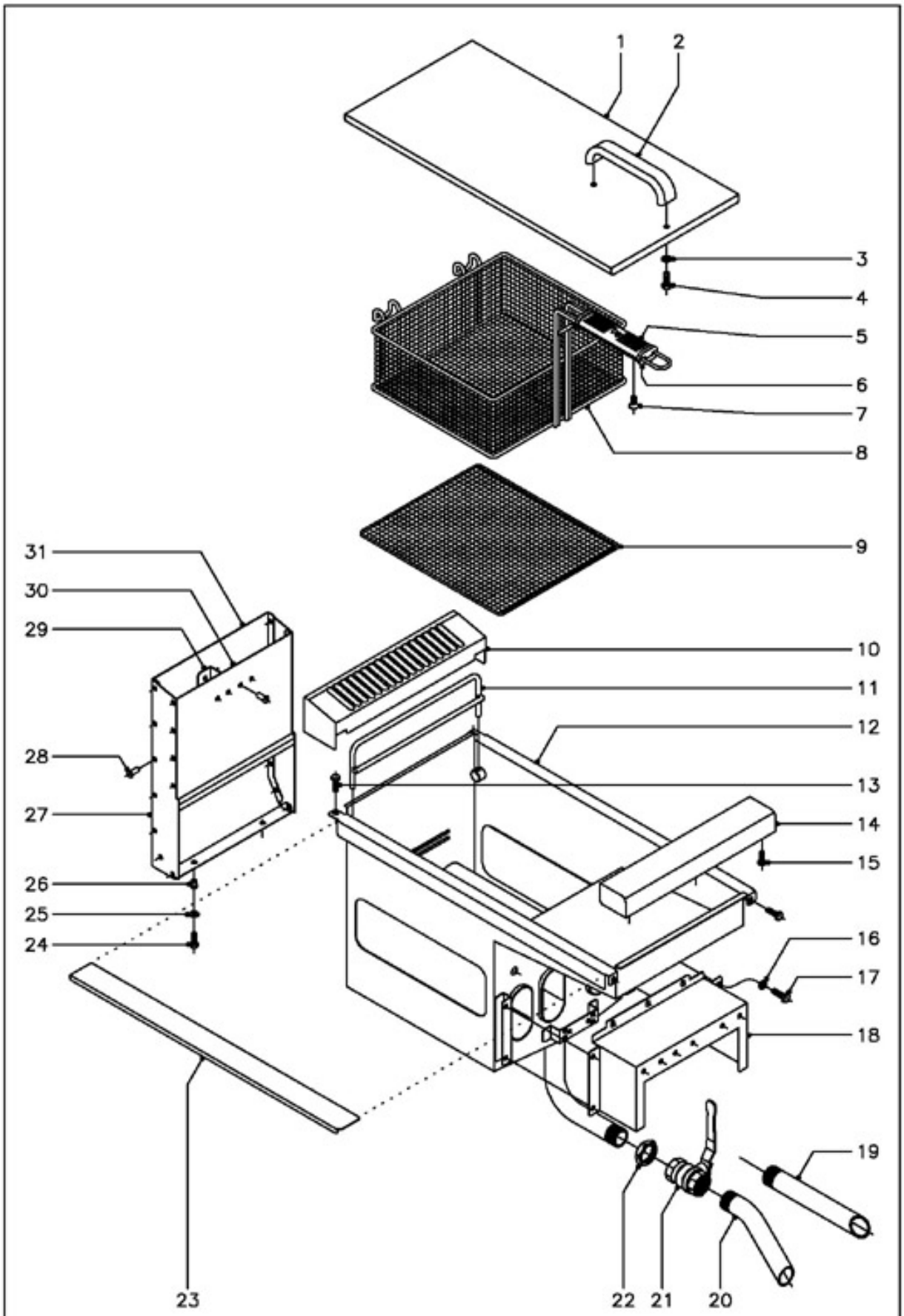

1	X316108
1	X326106
2	U580521
3	Q302022
4	Q012041
5	9616402
6	9616401
7	Q041431
8	X316503
8	X316530
9	X316502
9	X316501
10	X315425
10	X325401
11	X316501
12	X316100
12	X326100
13	Q012031
14	X315400
14	U745407
15	Q152004
16	Q302022
17	Q012031
18	X312610
19	X326107
20	X316113
21	X036107
22	Q223014
23	X336100
24	Q012032
25	Q302022
26	Q221342
27	X312636
28	Q419005
29	X312606
30	X312638
31	X312637

N plano	Firma	Fecha	Aparato	Lamina
C-1255		01-2003	CUBA FREIDORAS GAMA 700	2

Fagor Industrial S.Coop. FAGOR
Oñate

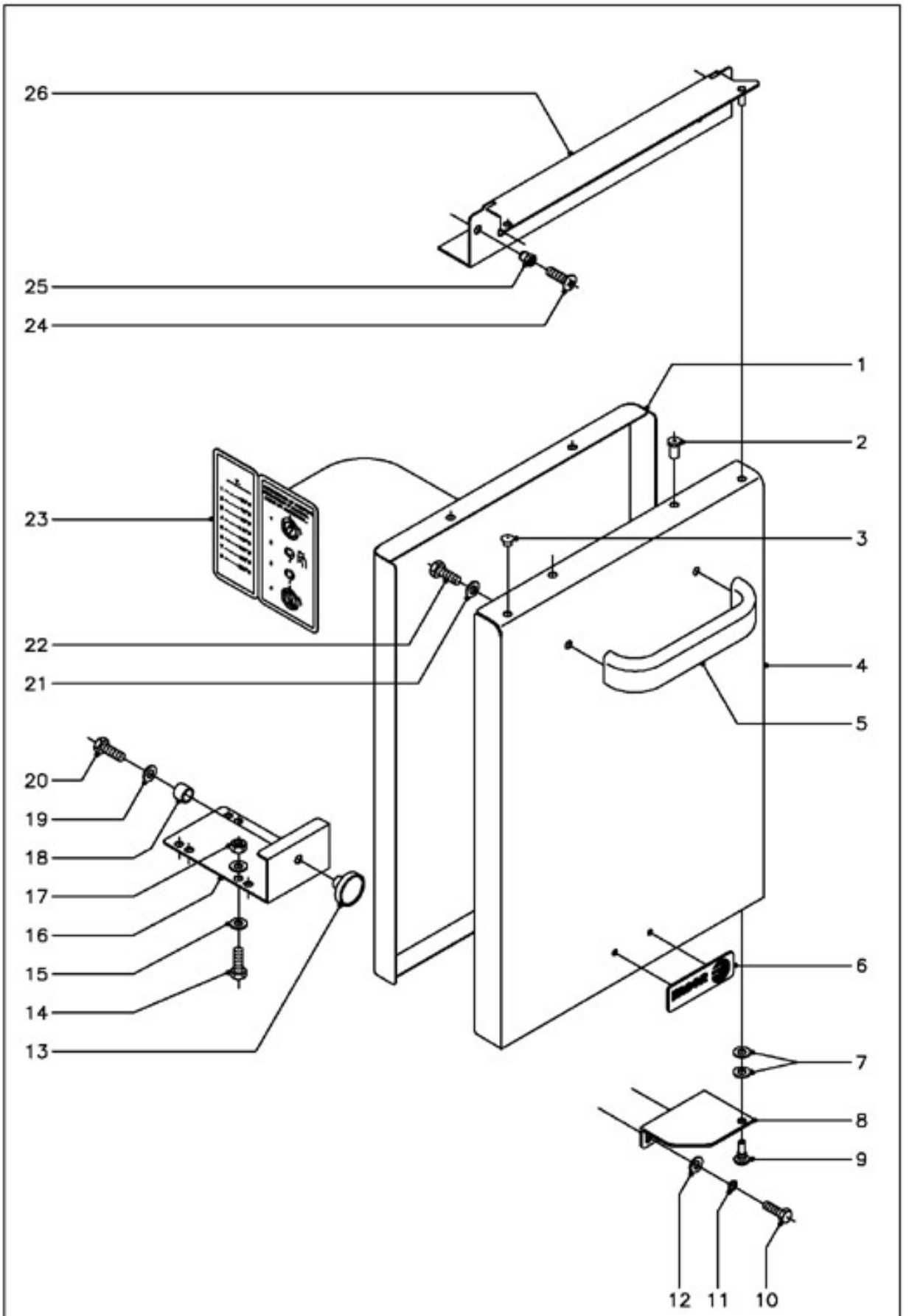

1	X960500
2	Q419005
3	X160537
4	X310507
5	U580521
6	U262806
	Q221023
7	Q232040
8	E022608
s/n	E022607
9	X960504
10	Q012042
11	Q262040
12	Q302022
13	X960501
14	Q012043
15	Q302022
16	X312631
17	Q162040
18	X960502
19	Q232020
20	Q012021
21	Q302022
22	Q012041
23	X166511
24	Q152004
25	Q221342
26	X312611
s/n	X332600

N plano	Firma	Fecha	Aparato		Lamina	
C-1256		01-2003	PUERTA FREIDORAS GAMA 700		3	Fagor Industrial S.Coop. FAGOR Onate

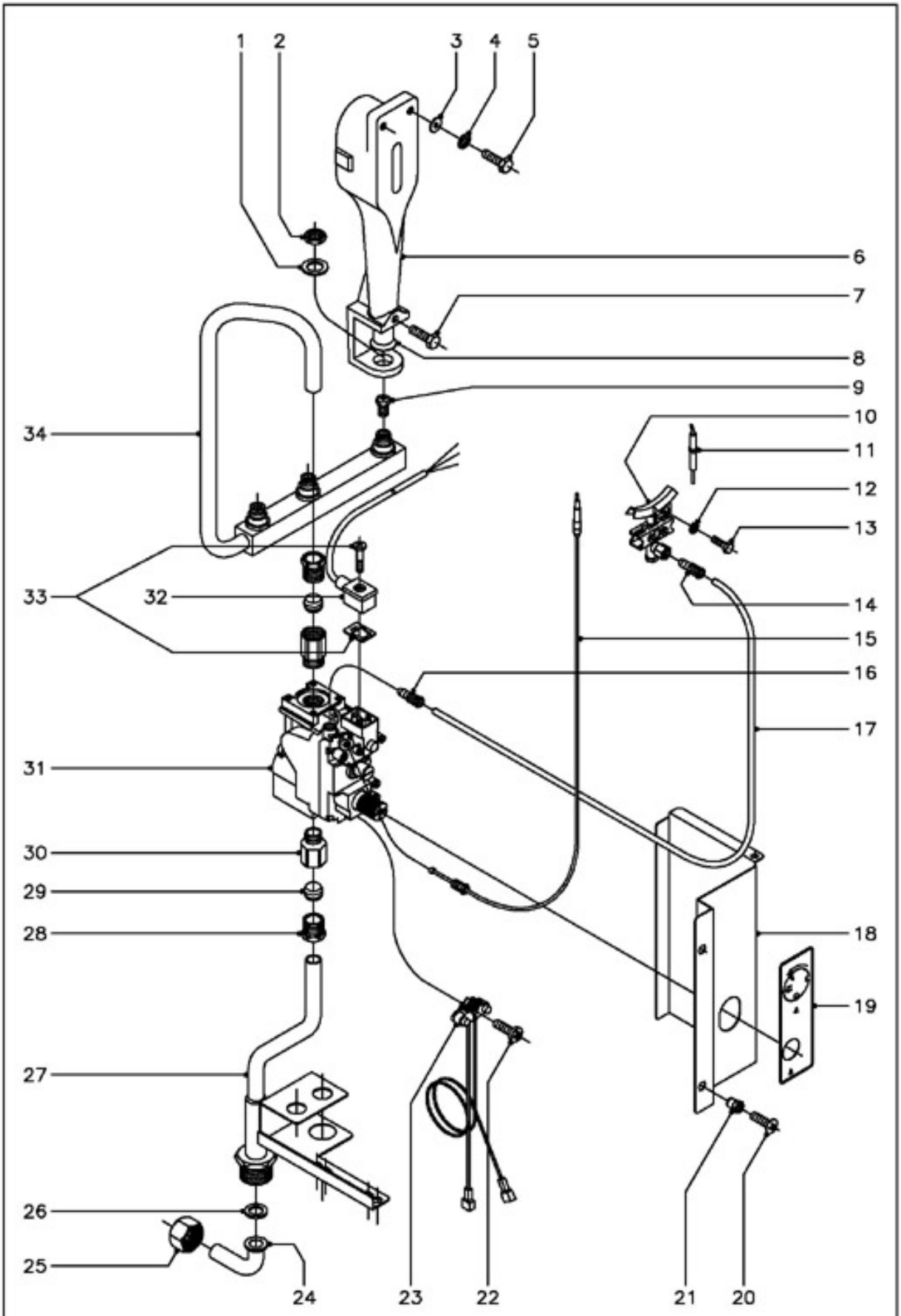

1	Q301322
2	Q223021
3	Q302022
4	Q242040
5	Q012042
6	X015700
7	Q012031
8	U325707
9	X312400
9	N502401
9	9483100
10	U062101
	U442138
	U442137
11	X012101
12	Q242030
13	Q012031
14	U134323
15	U562130
16	U134323
17	X315006
18	X312614
19	X162617
20	Q152004
21	Q221342
22	U134321
23	R275027
24	U565007
25	U725006
26	Q306052
27	X315000
28	X012104
29	X012105
30	X162101
31	X163000
	X163020
32	X163008
33	X163009
34	X315003

N plano	Firma	Fecha	Aparato	Lamina	
C-1257		01-2003	PARTE FUNCIONAL GAS FREIDORAS FG-710, FG-720	4	Fagor Industrial S.Coop. FAGOR Oñate

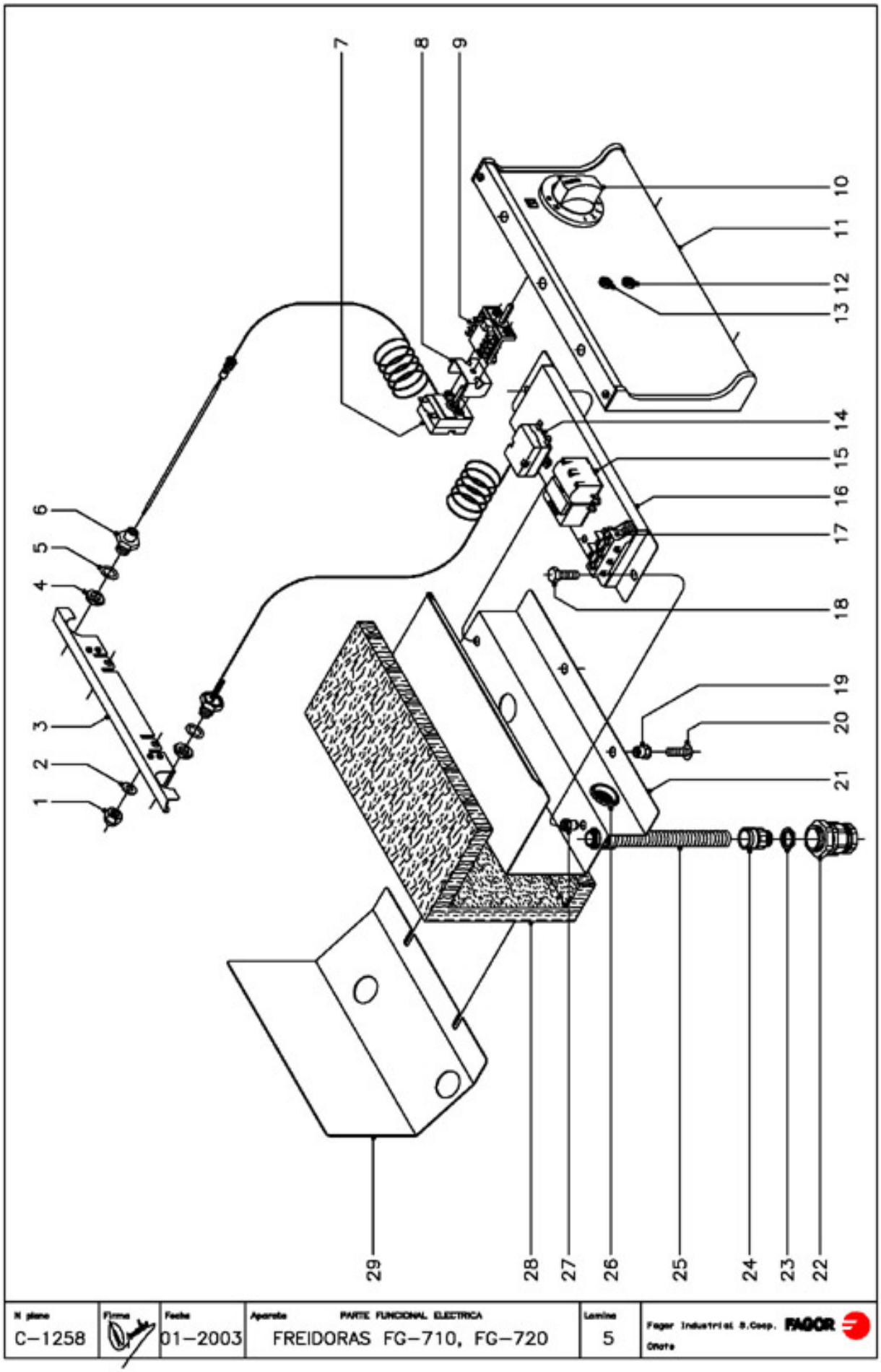

1	Q212040
2	Q302022
3	X326108
4	X163012
5	X012127
6	X166113
7	X163010
8	X313001
9	X163007
10	X313003
11	X322800
11	X332800
12	R693056
13	R693055
14	X012130
	Q223022
15	R073007
16	X312615
17	U183046
18	Q012031
19	Q221342
20	Q152004
21	X312613
22	R023013
23	X033028
24	X033027
25	3712600
26	X723014
27	Q221342
28	X312618
29	X312617

N plano	Firma	Fecha	Aparato	Lamina	
C-1258		01-2003	PARTE FUNCIONAL ELECTRICA FREIDORAS FG-710, FG-720	5	Fagor Industrial S.Coop. FAGOR Onate

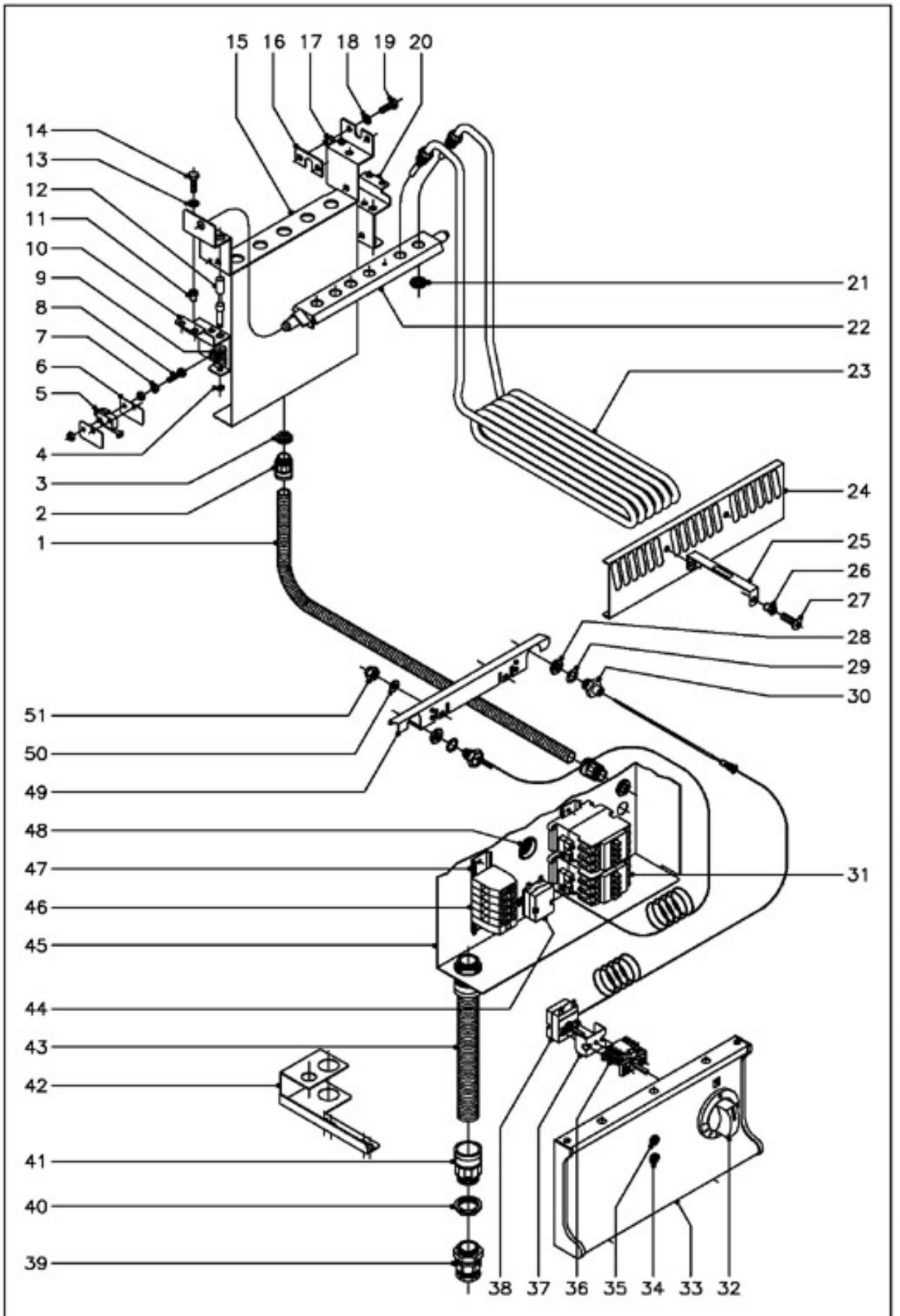

N plano	Firma	Fecha	Aparato		Lamina	Fagor Industrial S.Coop.	FAGOR
C-1259		01-2003	PARTE FUNCIONAL ELECTRICA FREIDORAS FE-710, FE-720		6	Oñate	

1	3712600
2	X033027
3	X033028
4	Q271033
5	R010534
6	R010535
7	Q161310
8	Q031315
9	Z700603
10	X322609
11	Q221342
12	R010533
13	Q242030
14	Q012031
15	X322606
16	X322611
17	Q221342
18	Q242030
19	Q012031
20	X322610
21	-
21	-
22	X322602
23	X323001
s/n	X323002
24	X323004
25	X033035
26	Q221342
27	Q152004

28	X163012
29	X012127
30	X166113
31	Z203050
32	X183025
33	X322800
33	X332800
34	R693056
35	R693055
36	X163007
37	X313001
38	X163010
39	R023013
40	R023025
41	X713021
42	X165030
43	3712300
44	X012130
	Q223022
45	X322601
46	P453025
	Z263302
	P453026
	Z263303
47	R663055
48	X723014
49	X326108
50	Q302022
51	Q212040

		BUTANO - PROPANO
9	X312400	Tobera quemador Ø1,10
10	U442138	Inyector piloto Ø0,25
		GAS NATURAL
9	N502401	Tobera quemador Ø1,70
10	U442137	Inyector piloto Ø0,40
		GAS VILLA
9	9483100	Tobera quemador Ø3,00
10	U442138	Inyector piloto Ø0,25

		BUTANO - PROPANO
9	9271300	Tobera quemador Ø1,20
10	U442138	Inyector piloto Ø0,25
		GAS NATURAL
9	9429400	Tobera quemador Ø1,80
10	U442137	Inyector piloto Ø0,40
		VARIOS
	X316510	Folleto de instrucciones
	X163050	Esquema electrico adhesivo
	X153020	Cableado limitador