PARTS LIST

for

KitchenAid®

5 QT. STAND MIXER – EUROPE

ARTISAN TILT HEAD

MODELS:

5KSM150PSEWH4 (White)
5KSM150PSEBU4 (Cobalt Blue)
5KSM150PSEGP4 (Grape)
5KSM150PSEGR4 (Imperial Grey)
5KSM150PSEOB4 (Onyx Black)
5KSM150PSEAC4 (Almond Creme)
5KSM150PSECR4 (Chrome)
5KSM150PSENK4 (Nickel)
5KSM150PSEIC4 (Ice)
5KSM150PSEER4 (Empire Red)
5KSM150PSEMY4 (Majestic Yellow)
5KSM150PSEPK4 (Pink)
5KSM150PSEPT4 (Pistachio)
5KSM150PSECV4 (Caviar)
5KSM150PSETG4 (Tangerine)
5KSM150PSEMC4 (Metallic Chrome)
5KSM150PSEBW4 (Blue Willow)
5KSM150PSEGC4 (Gloss Cinnamon)
5KSM150PSEGA4 (Green Apple)
5KSM150PSEPM4 (Pearl Metallic)
5KSM150PSEBY4 (Boysenberry)
5KSM150PSEBR4 (Bronze Pearl)
5KSM150PSECH4 (Chocolate)
5KSM150PSEPE4 (Pear)

FOR CUSTOMER SATISFACTION ALWAYS USE
FACTORY SPECIFICATION PARTS

KITCHENAID ST. JOSEPH MICHIGAN 49085

02−09 Litho in U.S.A. (skr) (eeb)
© 2009 KITCHENAID
Part No. 8212383 Rev. E

kliknij w czerwone pole, aby zobaczyć/zamówić część

COLOR VARIATION PARTS

For Models: 5KSM150PSE__4

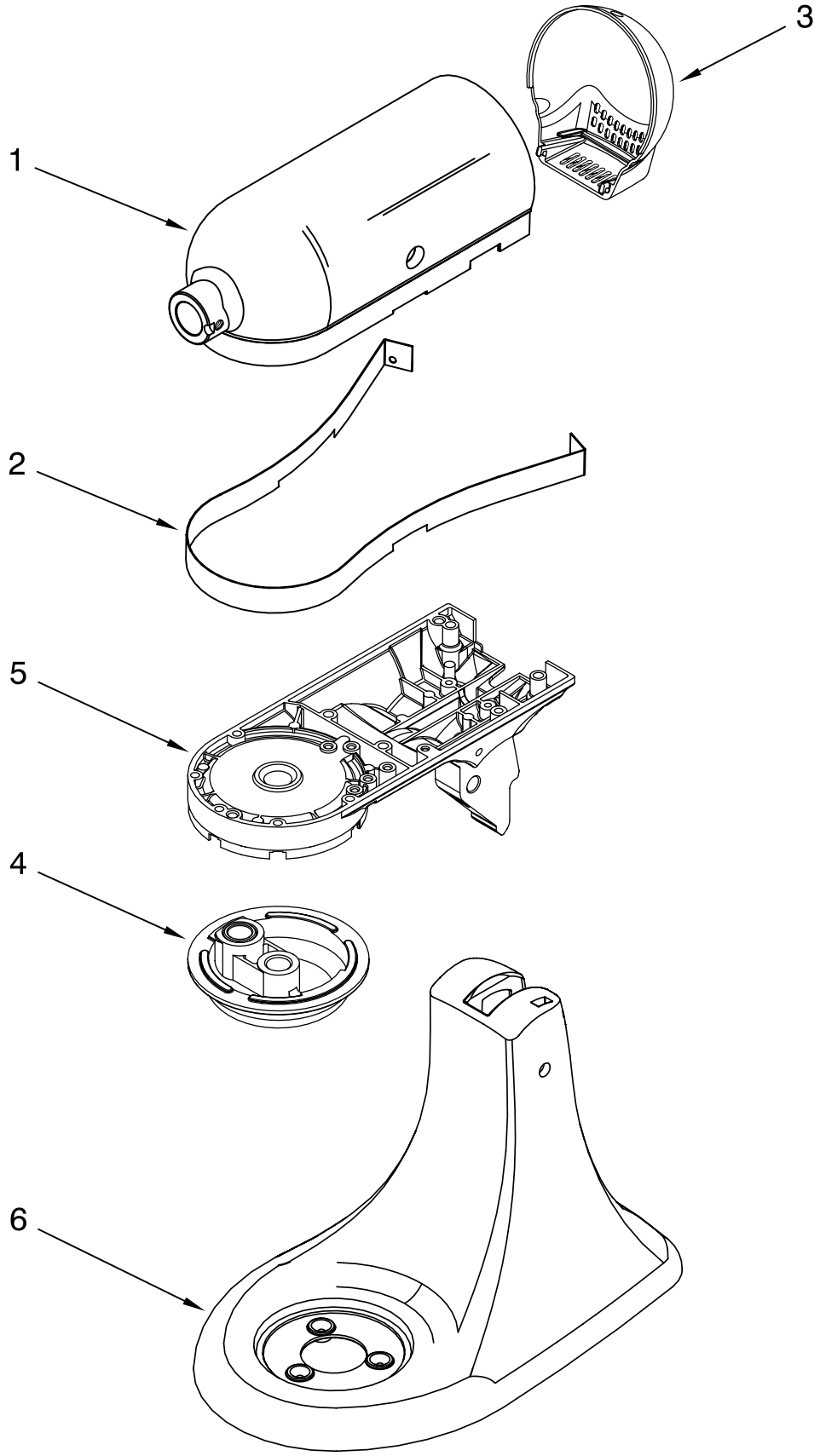

FOR ORDERING INFORMATION REFER TO PARTS PRICE LIST

COLOR VARIATIONS PARTS

For Models: 5KSM150PSE__4

Illus. No.	Part No.	DESCRIPTION
1		Motor Housing
	240291−1	White
	240291−7	Cobalt Blue
	9707126	Grape
	240291−22	Imperial Grey
	240291−13	Onyx Black
	240291−16	Almond Creme
	240291−19	Chrome
	9706461	Nickel
	9707662	Ice
	240291−21	Empire Red
	240291−20	Majestic Yellow
	9706473	Pink
	9706836	Pistachio
	9705243	Caviar
	9706849	Tangerine
	9704025	Metallic Chrome
	9709600	Blue Willow
	9709442	Gloss Cinnamon
	9709688	Green Apple
	W10128417	Pearl Metallic
	W10140801	Boysenberry
	W10189057	Bronze Pearl
	9708141	Chocolate
	W10193514	Pear
2		Trim Band
	W10190254	Black/Silver
3		End Cover
	240253−1	White
	240253−8	Cobalt Blue
	9707131	Grape
	240253−23	Imperial Grey
	240253−14	Onyx Black
	240253−16	Almond Creme
	240253−20	Chrome
	9706268	Nickel
	9707667	Ice
	240253−22	Empire Red
	240253−21	Majestic Yellow
	9706469	Pink
	9706841	Pistachio
	9705241	Caviar
	9706854	Tangerine
	9704029	Metallic Chrome
	9709595	Blue Willow
	9709437	Gloss Cinnamon
	9709683	Green Apple
	W10128412	Pearl Metallic
	W10140796	Boysenberry
	W10189052	Bronze Pearl
	9708146	Chocolate
	W10193509	Pear

Illus. No.	Part No.	DESCRIPTION
4		Planetary
	240286−1	White
	240286−10	Cobalt Blue
	9707129	Grape
	240286−24	Imperial Grey
	240286−16	Onyx Black
	240286−18	Almond Creme
	240286−21	Chrome
	9706271	Nickel
	9707665	Ice
	240286−23	Empire Red
	240286−22	Majestic Yellow
	9706475	Pink
	9706839	Pistachio
	9705244	Caviar
	9706852	Tangerine
	9706670	Metallic Chrome
	9709597	Blue Willow
	9709439	Gloss Cinnamon
	9709685	Green Apple
	W10128414	Pearl Metallic
	W10140798	Boysenberry
	W10189054	Bronze Pearl
	9708144	Chocolate
	W10193511	Pear
5		Lower Gearcase
	240350−4	White
	9701420	Cobalt Blue
	9707123	Grape
	240350−86	Imperial Grey
	240350−56	Onyx Black
	240350−62	Almond Creme
	9701398	Chrome
	9706459	Nickel
	9708868	Ice
	240350−91	Empire Red
	240350−93	Majestic Yellow
	9707364	Pink
	9706832	Pistachio
	9706911	Caviar
	9707936	Tangerine
	9707219	Metallic Chrome
	9709603	Blue Willow
	9709445	Gloss Cinnamon
	9709691	Green Apple
	W10128420	Pearl Metallic
	W10140804	Boysenberry
	W10189060	Bronze Pearl
	9708138	Chocolate
	W10242875	Pear

Illus. No.	Part No.	DESCRIPTION
6		Pedestal w/Feet & Headlock
	3184273	White
	3184278	Cobalt Blue
	9708637	Grape
	9703998	Imperial Grey
	3184275	Onyx Black
	9705577	Almond Creme
	3184277	Chrome
	9706456	Nickel
	9708865	Ice
	3184280	Empire Red
	3184281	Majestic Yellow
	9707361	Pink
	9709637	Pistachio
	9709632	Caviar
	9707933	Tangerine
	9707188	Metallic Chrome
	W10119207	Blue Willow
	W10119202	Gloss Cinnamon
	W10128411	Green Apple
	W10128423	Pearl Metallic
	W10189051	Boysenberry
	W10189063	Bronze Pearl
	W10189045	Chocolate
	W10242882	Pear

Colors Subject To Change.
Any Color Not Listed is
No Longer Available.
If Additional Colors Are Added,
This Page Will Be Updated.

CASE, GEARING AND PLANETARY UNIT

For Models: 5KSM150PSE__4

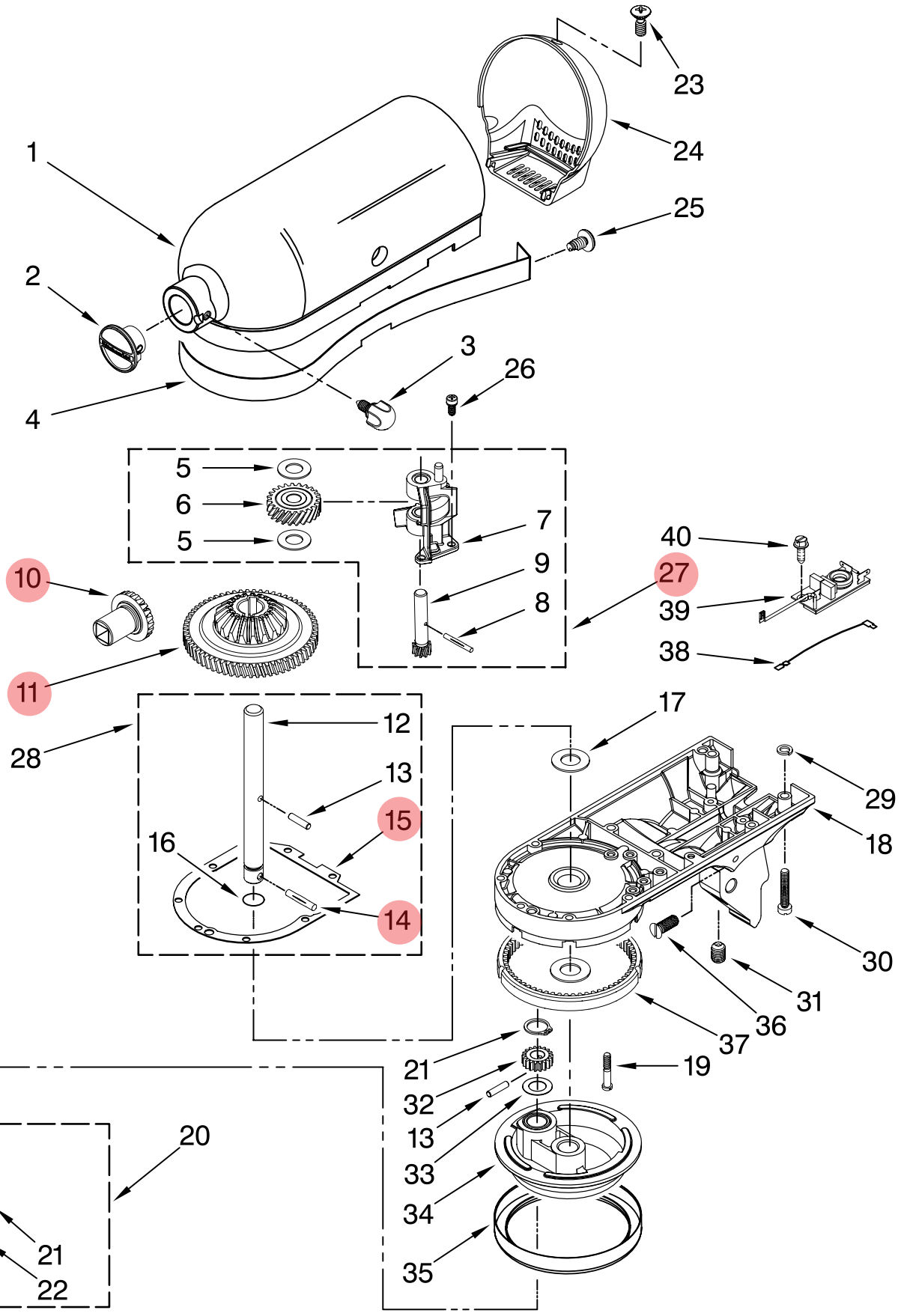

FOR ORDERING INFORMATION REFER TO PARTS PRICE LIST

CASE, GEARING AND PLANETARY UNIT

For Models: 5KSM150PSE__4

Illus. No.	Part No.	DESCRIPTION
1	**	Gearcase Motor Housing
2	242765−2	Cap, Attachment Hub
3	9709194	Thumb Screw Black
4	**	Band, Trim
5	3180161	Washer
6	W10112253	Worm Gear
7	240308	Worm Gear Bracket and Bearing
8	9705444	Pin
9	240210−2	Gear, Shaft & Pinion
10	9705130	Gear, Attachment Hub Bevel
11	9709627	Gear, Bevel Pinion & Center
12	240026	Shaft, Vertical Center
13	240018−1	Pin, Agitator Shaft
14	9705443	Pin, Groove
15	4162324	Gasket, Transmission
16	67500−55	O−Ring
17	3180163	Washer
18	**	Lower Gear Case
19	103994	Screw
20	3184052	Shaft, Agitator
21	9703438	Ring, Retaining
22	9704677	Pin, Groove
23	4162914	Screw
24	**	Cover, End
25	311932	Screw
26	3400022	Screw
27	240309−2	Worm Gear Bracket and Gear
28	4160474	Center Shaft & O−Ring
29	8533914	Washer, Lock
30	3400025	Screw, Machine
31	3400203	Screw, Set
32	9703903	Gear, Pinion
33	9706090	Washer
34	**	Planetary
35	240285	Ring, Planetary
36	89411	Screw, Adjusting
37	9703904	Gear, Internal
38	9702311	Lead, Filter Control Board
39	9705132	RFI Filter
40	3184086	Screw

**Refer to Pages 2 & 3
Color Variation Parts

MOTOR AND CONTROL PARTS

For Models: 5KSM150PSE__4

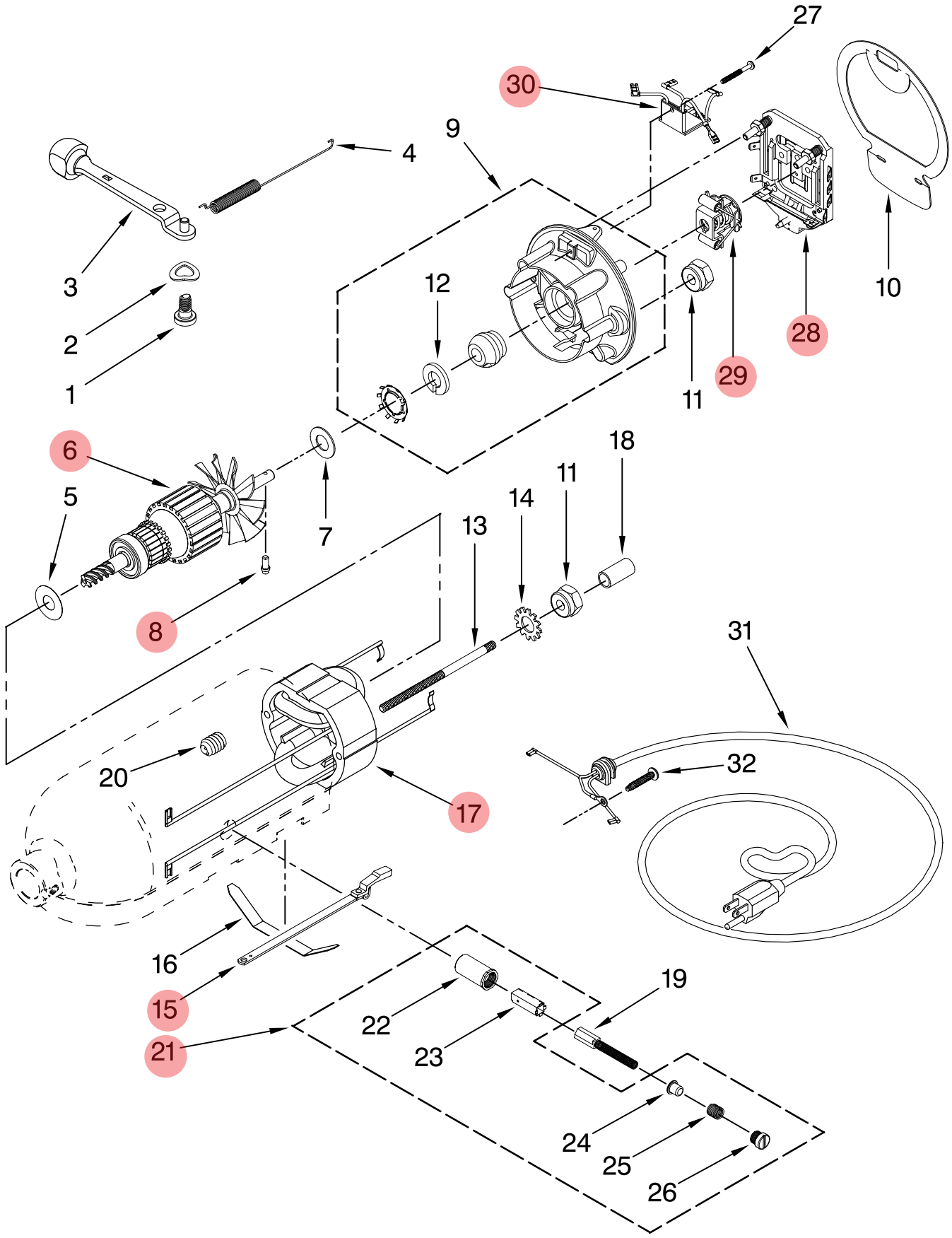

FOR ORDERING INFORMATION REFER TO PARTS PRICE LIST

MOTOR AND CONTROL PARTS

For Models: 5KSM150PSE__4

Illus. No.	Part No.	DESCRIPTION
1	110679	Screw, Pivot
2	116241	Washer, Spring
3		Control, Speed Assembly
	9709276	Black
4	3183680	Spring, Control Plate
5	9704324	Washer, Ball Bearing (Front)
6	9708316	Armature & Bearing
7	3180162	Washer
8	16998	Stud, Governor Dr
9	3180526	Bracket, Bearing Assembly
10	3184356	Seal, End
11	W10131078	Nut, 10−24
12	3180238	Washer, Felt
13	240769	Screw, Stator
14	W10068270	Washer
15	3184176	Speed Link & Cam
16	240205	Spring, Flat
17	9701670	Field Assembly
18	4162634	Sleeve, Motor
19	9706416	Brush, Carbon
20	9707926	Screw
21	4162546	Brush Holder
22	3179908	Housing, Brush Holder
23	240680	Insert, Brush Hldr
24	116286	Cap, Spring Seat
25	116287	Spring, Cap
26		Cap, Brush Holder
	3184212	Black
27	W10068260	Screw
28	W10119326	Control Plate Assy
29	17830	Governor Assembly
30	9706596	Phase Control Brd
31		Power Cord
	9702318	White
	9702319	Black
32	3184086	Screw

BASE AND PEDESTAL UNIT

For Models: 5KSM150PSE__4

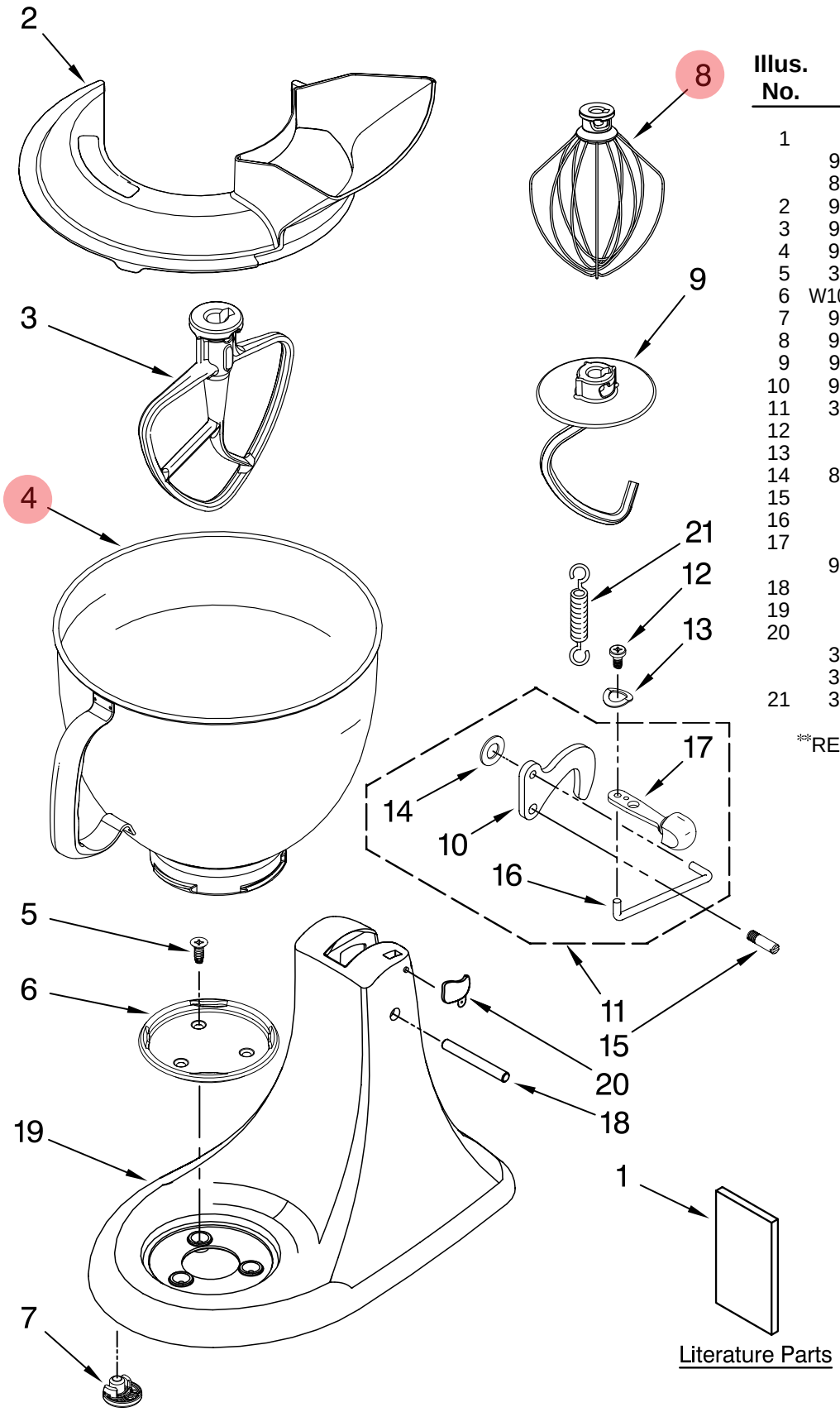

Illus. No.	Part No.	DESCRIPTION
1		Literature Parts
	9709851	Use & Care Guide
	8212383	Repair Parts List
2	9709923	Shield, Pouring
3	9708472	Beater, Flat
4	9706619	Bowl, 5 Qt.
5	3400020	Screw
6	W10191926	Screw Cap Kit
7	9709707	Foot, Base
8	9706446	Whip, Wire
9	9708471	Hook, Dough
10	9709055	Latch
11	3184200	Latch, Link Assy
12	110679	Screw, Pivot
13	116241	Washer, Spring
14	8533912	Washer
15	103993	Screw, Latch
16	24450	Link, Latch
17		Lever, Latch
	9709267	Black
18	16910	Pin, Hinge
19	**	Pedestal
20		Head Lock
	3184262	White
	3184264	Black
21	3183690	Spring, Lock Lever

**REFER TO PAGES 2 & 3.

FOR ORDERING INFORMATION REFER TO PARTS PRICE LIST

ACCESSORY PARTS

For Models: 5KSM150PSE__4

Illus. No.	Part No.	DESCRIPTION
	4164839	Speed Disc (Service Tool)
	4160588	Grease, Planetary
	4164778	Mixer Attachment Pak (Includes Food Grinder (FG−A), Food Strainer (FVSP), And Vegetable Slicer, (RVS−A) (FPP−A)
	4164749	Food Grinder (FG−A)
	8211924	Grain Mill (KGMA)
	4164768	Pasta Maker And Food Grinder (Includes SNP Pasta Maker Plates) (SN/FG−A)
	4164775	Fruit/Vegetable Strainer Parts (Use With FG−A Model Only) (FVSP)
	4164750	Rotor Slicer/ Shredder(With 4 Standard Cones) Fine Shredder, Coarse Shredder, Thick Slicer,and Thin Slicer (RVS−A)
	9704568	Pouring Shield (KPS2CL)
	4164824	Pasta Maker Plates (SNP−A)
	4164774	Fruit/Vegetable Strainer and Food Grinder (FVS−FG−A)
	3180617	Cover, Decorative (Cotton Polyester)
	4162838	Food Tray (FT)
	4164748	Juicer (JE)
	4164747	Can Opener (CO)
	4164803	Sausage Stuffer Kit (SSA)
	8212632	Ice Cream Maker (5KICA)
	3177924	Bowl Cover, Plastic Non− Sealing
	4163337	Bowl, Stainless With Handle
	3180262	Bowl, 3 Qt.
	4162160	Bowl, Satin Stainless