F A G O R

SPARE PARTS CATALOGUE
ERSATZTEILKATALOG
CATALOGUE PIECES DETACHEES
CATALOGO PARTI RICAMBIO
CATALOGO DE PIEZAS DE RECAMBIO
CATALOGO PECAS DE REPOSICAO

LP 130

13-05-2013

LP 130

Tav.1: Carrozzeria
Tav.2: Impianto elettrico
Tav.3: Componenti in vasca
Tav.4: Circuito di lavaggio
Tav.5: Circuito di risciacquo
Tav.6: Lance di lavaggio
Tav.7: Pompa di lavaggio

Tav.1: Machine body
Tav.2: Electrical components
Tav.3: Components in the tank
Tav.4: Washing circuit
Tav.5: Rinsing circuit
Tav.6: Washing arms
Tav.7: Washing pump

Tab.1: Carrocería
Tab.2: Instalación eléctrica
Tab.3: Componentes en cuba
Tab.4: Circuito de lavado
Tab.5: Circuito d'enjuague
Tab.6: Brazos de lavado
Tab.7: Bomba de lavado

Tab.1: Carrosserie
Tab.2: Installation électrique
Tab.3: Composants de cuve
Tab.4: Circuit de lavage
Tab.5: Circuit de rinçage
Tab.6: Bras de lavage
Tab.7: Pompe de lavage

Taf.1: Verkleidung
Taf.2: Elektrische Anlage
Taf.3: Bauteile im Waschtank
Taf.4: Spuelschaltung
Taf.5: Nachspuelschaltung
Taf.6: Wascharme
Taf.7: Spuelpumpe

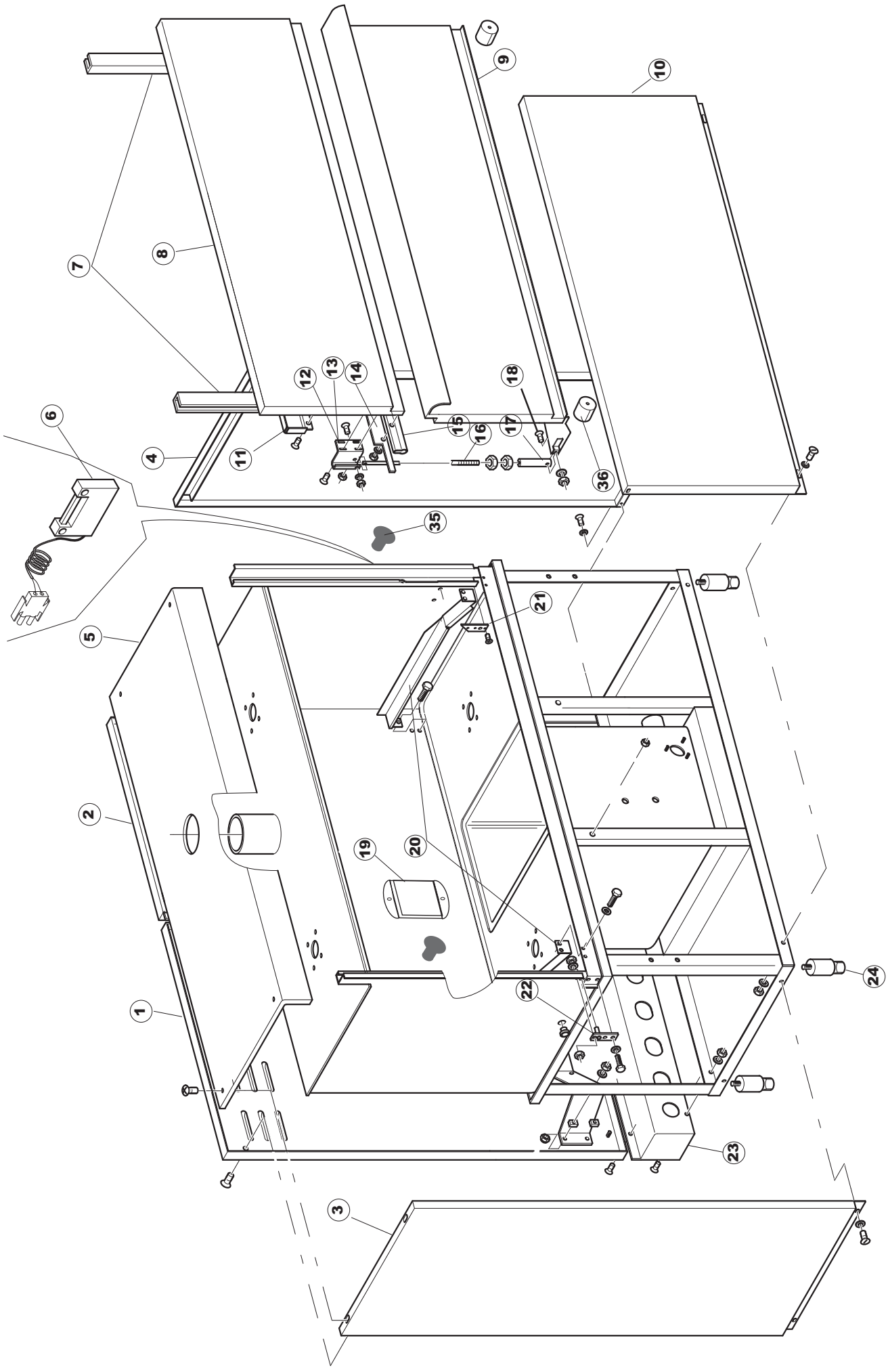
1
2
3
4
5
6
7
8
9
10
11
12
13
14
15
16
17
18
19
20
21
22
23
24
35
36

Listino componenti per pagina 1

1	EU43622	PANNELLO RETRO REAR PANEL RUECKPANEEL PANNEAU ARRIERE PANEL PARTE POST IZQDA.	
2	EU43621	PANNELLO RETRO DX BACK PANEL, RIGHT PANNEAU ARRIER, DROIT	
3	EU42810	PANNELLO LATERALE SINISTRO LEFT SIDE PANEL PANEEL PANNEAU LATERAL GAUCHE PANEL LATERAL IZQDO.	
4	EU42814	PANNELLO LATERALE DESTRO SIDE PANEL PANEEL PANNEAU	
5	EU43118	PANN.SUP.U132 PANEL, UPPER U132 OB. PLATTE U132 PANN.SUP.U132 PANEL SOP. U132	
6	EU80871	MICRO MAGNETICO MAGNETIC DOOR SWITCH TUERKONTAKTSCHALTER CONTACTE MAGNETIQUE CONTACTO MAGNETICO	
7	EU44265	GUIDA PORTA DOOR SLIDING GUIDE TUER-GLEITENDER BAHN - OBEN - GUIDE GLISSANTE PORTE GUIA PUERTA	
8	EU43380	PORTA SUPERIORE PUERTA SUPERIOR	
9	EU43470	PORTA INFERIORE PUERTA INFERIOR	
10	EU43124	PANNELLO ANTERIORE LP301 COMPLETO PANEL DELANT.LP301 COMPLETO.	
11	EU43055	BATTUTA SPORTELLO SUPER.U132 DOOR-LEDGE, SUPER.U132 TÜRANSCHLAG, OBEN U132 FEUILLURE VOLET SUP.U132 TOPE PUERTA SUPER. U132	
12	EU4108701	SQUADRA DESTRA AGGANCIO TIRANTE SPORTELLO SUPERIC RIGHT BRACKET FOR UPPER DOOR TIE ROD FASTENING RECHT-HATER FUER ANKUPPELN DER OBEREN TUER-STANG EQUERRE DROITE ACCROCHAGE TIRANT PORTE SUPERIEUR ESCUAD DCHA. FIJA TIR PUERTA SUP. LP PG ACAB.	
13	EU4108801	SQUADRETTA SINISTRA AGGANCIO TIRANTE SPORTELLO SUF LEFT BRACKET FOR UPPER DOOR TIE ROD CONNECTION FOF LINK-HALTER FUER ANKUPPELN OBEREN TUERSTANGE FUEF EQUERRE DROITE ACCROCHAGE TIRANTE PORTE SUPERIEUI ESCUAD IZQDA. FIJ TIR PUERTA SUP. LP PG ACAB.	
14	EU43382	SUPPORTO GUARNIZIONE SPORTELLO SUPERIORE PER LAVA DOOR PACKING SUPPORT - UPPER FOR POT AND PAN WASHE TUERDICHTUNGSHALTERUNG - OBEN FUER KOCHT OEPFESP SUPPORT JOINT PORT SUPERIEUR POUR LAVE-C ASSEROLES SOP. JUNTA PUERTA SOP. U132	
15	EU43383	GURANIZIONE PORTA	

16	EU44593	TIRANTE PORTA DOOR LEVER HEBEL TUER MONT TIRANT PORTE TIRANTE PUERTA	
17	EU41095	BUSSOLA TIRANTE PORTA 610/610H BUSHING, DOOR TIE-ROD 610/610H BUCHSE, TÜRZUGSTAB 610/610H DOUILLE TIRANT PORTE 610/610H CASQUILLO TIRANTE PUERTA 610/610H	
18	EU486078	VITE TC-CE M6X40 INOX SCREW TC-CE M6X40 INOX SCHRAUBE TC-CE M6X40 INOX VIS TC-CE M6X40 INOX TORNILLO TC-CE M6X40 INOX	
19	EU43527	PROTEZIONE GUARD SCHUTZVERKLEIDUNG PROTECTION SOPORTE DE PROTECCION	
20	EU42539	GUIDA CESTO RACK GUIDE KORBFUEHRUNG COULISSE PANIER GUIA CESTA	
21	EU4113501	SPESSORE LAT.SPORTELLO SIDE THICKNESS FOR DOOR SEITL. EINLEGERING FÜR TÜR EPAISSEUR LAT. VOLET GROSOR LAT. PUERTA	
22	EU4114501	PIASTRINA PERNO SPORTELLO U61.. PLATE, DOOR PIN U61.. PLATTE, TÜRANGEL U61.. PLAQUE PIVOT VOLET U61.. PLANCHITA PERNO PUERTA U61. .	
23	EU43523	PANNELLO RETRO INFERIORE REAR PANEL RUECKPANEEL PANNEAU ARRIERE PANELO PARTE POST. INFERIOR	
24	EU927006	PIEDE REGOLABILE X TRAINO FOOT, ADJUST. FOR TACK CONVEYOR VERSTELLFUSS FÜR KORBTR. PIED REGLABLE POUR AVANC. PATA REGULABLE X ACCION.	
35	EU929199	PIEDINO BATTUTA TIPO 30191.1.2(NERO) FOOT, BUFFER TYPE 30191.1.2 (NOIR) STÜTZFUSS, ANSCHLAG TYP 30191.1.2 (SCHWARZ) PIED FEUILL. TYPE 30191.1.2(NOIR) PATA TOPE TIPO 30191. 1. 2(NEGRO)	
36	EU41100	TAMPONE BATTUTA SPORTELLO LP DOOR BUFFER LP PUFFER, TÜRANSCHLAG LP TAMPON FEUILLURE VOLET LP TAMPON TOPE PUERTA LP	

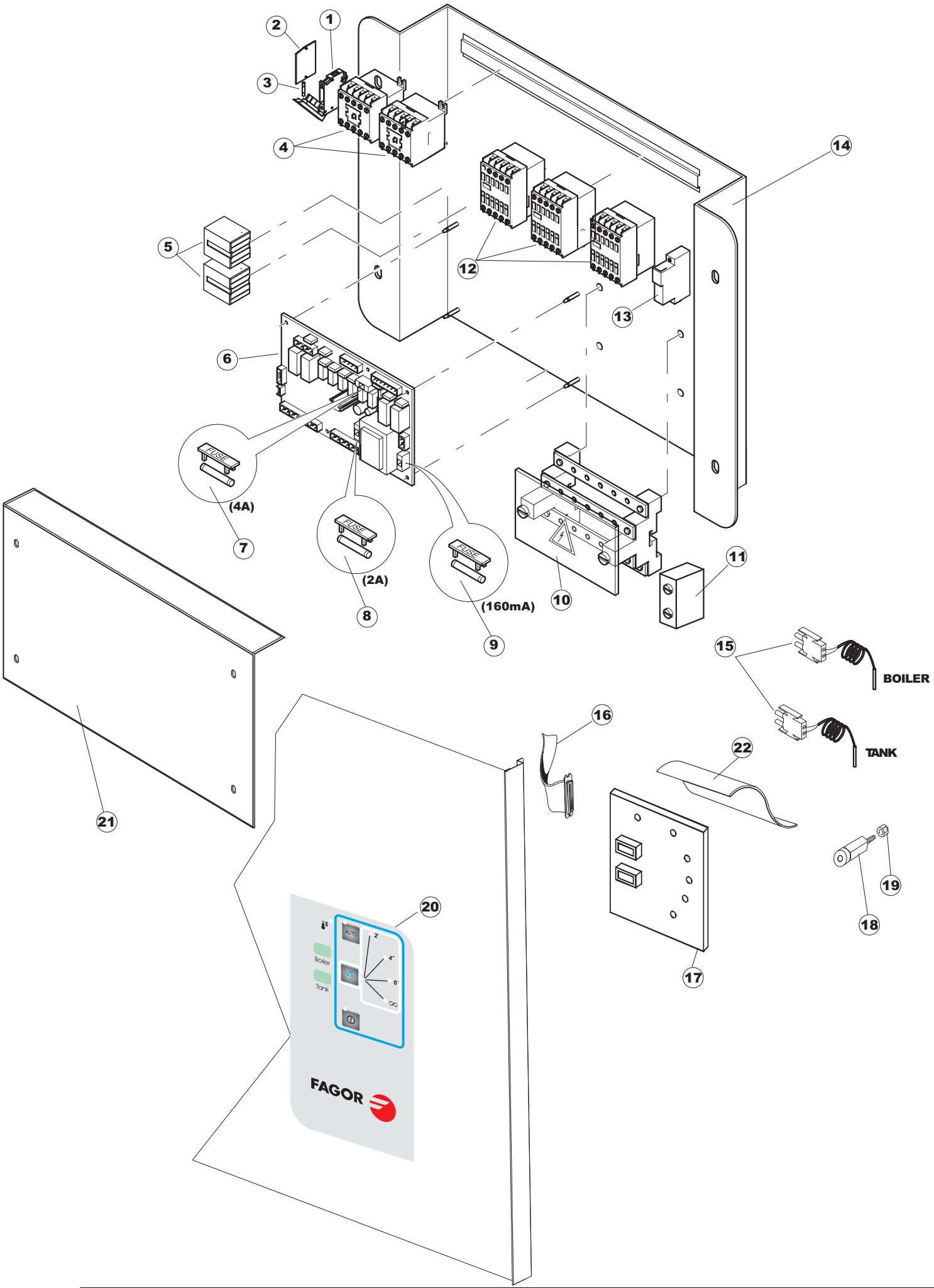
1
2
3
4
5
6
7
8
9
10
11
12
13
14
15
16
17
18
19
20
21
22
FUSE
(4A)
(2A)
(160mA)
BOILER
TANK
AUTO
Boiler
Tank
FAGOR

Listino componenti per pagina 2

1	EUH.228047	* PORTA-FUSIBILE * FUSE-HOLDER *SICHERUNGSTRAGER * PORTE-FUSIBLE * PORTAFUSIBLE	
2	EUH.228048	* CHIUSURA PORTA-FUSIBILE * CLAMPING FOR FUSE-HOLDER * SICHERUNGSTRAGER-VERSCHLUSS * COUVERTURE PORTE-FUSIBLE * CIERRE PORTAFUSIBLE	
3	EU228004	FUSIBILE 5X20F 4A FAST FUSE, 5X20 4A FAST SICHERUNG, 5X20 4A FAST FUSIBLE 5X20 4A FAST FUSIBLE 5X20 4A FAST	
4	EU73350	CONTATTORE 230/50-60HZ CONTACTOR 230-50/60HZ KONTAKT-GEBER 230-50/60HZ CONTACTEUR 230-50/60HZ CONTACTOR	
5	EU929115	RELE 16A 230V 62.82 RELAY 16A 230V 62.82 RELAIS 16A 230V 62.82 RELAIS 16A 230V 62.82 RELE 16A 230V 62. 82	
6	EU215032-1	SCHEDA MAIN BOARD KARTE CARTE ELECTRONIQUE TARJETA GET50	
7	EU228004	FUSIBILE 5X20F 4A FAST FUSE, 5X20 4A FAST SICHERUNG, 5X20 4A FAST FUSIBLE 5X20 4A FAST FUSIBLE 5X20 4A FAST	
8	EU80874	FUSIBILE 2A 250V FUSE 2A 250V SCHMELZSICHERUNG 2A 250V FUSIBLE 2A 250V FUSIBLE 2A 250V (OMEGA)	
9	EU228012	FUSIBILE 5X20 T160MA FUSE 5X20 T160MA SICHERUNG FUSIBLE FUSIBLE 5X20 T160MA	
10	EU75983	MORSETTIERA 4POLI 600V TERMINAL BOARD 4P 600V KLEMMLEISTE 4P 600V BORNIER 4P 600V BORNERO 4POLOS(125A) 600V POTENCIA	
11	EU65980	MORSETTO 35MMQ 750V COLORE BLU (ART.WEI1020580000)	
12	EU73351	CONTATTORE 230/50-60HZ CONTACTOR 230-50/60HZ KONTAKT-GEBER 230-50/60HZ CONTACTEUR 230-50/60HZ CONTACTOR TRIPOLAR 40A	
13	EUDEI4	CONTATTO AUSILIARIO (3RH1921-1DA11) AUXILIARY CONTACT (3RH1921-1DA11) CONTACTO AUXILIAR (3RH1921-1DA11)	
14	EU43219	PANNELLO PANEL PANEEL PANNEAU PANEL PORTA-COMPONENTES	
15	EU231016	SONDA TEMPERATURA TEMP. PROBE TEMPERATURSONDE SONDE SONDA TEMPERATURA (AMPOLLA ACERO)	

16	EU80933	CAVO FLAT COMANDI SUPERIORI CAPOT CABLE FLAT CAPOT FLACHKABEL TRISSE LIAISON CABLE FLAT MANDOS SUPERIORES CAPOT	
17	EU80889	TASTIERA COMANDI CONTROL KEYBOARD BEDINGUNGEN-TESTENBRETT TABLEAU A POUSSOIRS COMMANDES TECLADO DE MANDOS	
18	EU419036	SPACER SPACER, M3 ABSTANDSSTÜCK, M3 ENTRETOISE M3 DISTANCIADOR M3	
19	EU417119	DADO M3 PLASTICA BIANCO NUT, M3 PLASTIC WHITE SCHRAUBENMUTTER, M3 KUNST. WEISS ECROU M3 PLASTIQUE BLANC TUERCA M3 PLASTICO BLANCO	
20	EU41381	POLIESTERE POLYESTERE POLYESTERE POLYESTERE POLIESTER LAVA-OLLAS FAGOR	
21	EU43221	COPERCHIO CRUSCOTTO COVER DECKEL COUVERCLE TAPA PANEL	
22	EU69810	TENDINA COPERTURA TASTIERA PANNELLO ANTERIORE CURTAIN VORHANG RIDEAU CORTINA COPERTURA TECLADO PAN. DELANT.	

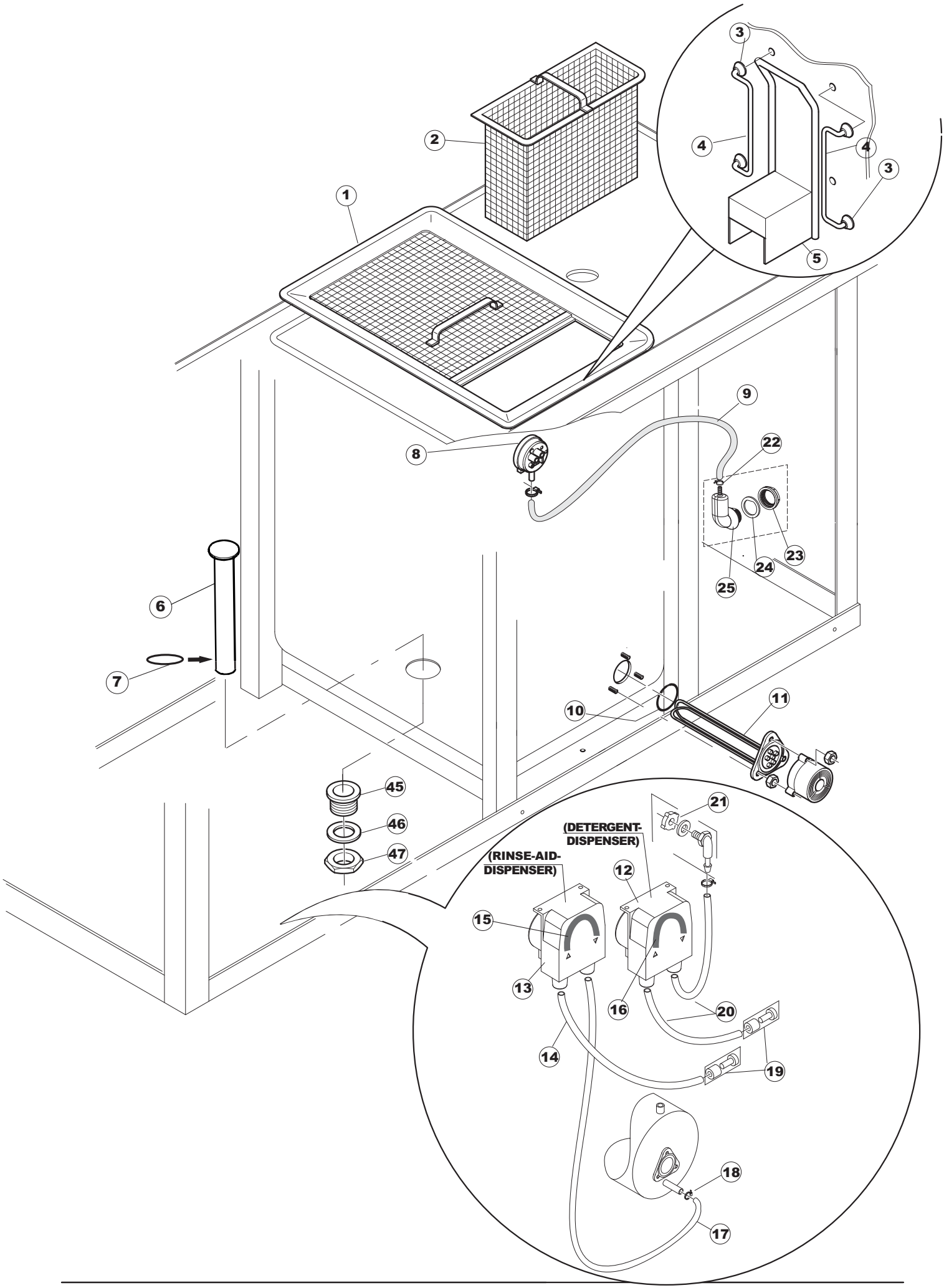
1
2
3
4
5
6
7
8
9
10
11
12
13
14
15
16
17
18
19
20
21
22
23
24
25
45
46
47
(RINSE-AID-
DISPENSER)
(DETERGENT-
DISPENSER)

Listino componenti per pagina 3

1	EU43039	FILTRO VASCA COMPL.U132 FILTER, TANK - COMPL.U132 FILTER, TANK - KOMPL.U132 FILTRE CUVE COMPL.U132 FILTRO CUBETA COMPL. U132	
2	EU43044	FILTRO VASCA A CASSETTO COMPL.U132 FILTER, TANK - BOX-TYPE COMPL.U132 FILTER, TANK - KASTENTYP KOMPL.U132 FILTRE CUVE A TIROIR COMPL.U132 FILTRO CUBETA DE CAJON COMPL. U132	
3	EU472061	RONDELLA X GUIDA CESTO CL.3 WASHER, FOR BASKET GUIDE CL.3 UNTERLEGSCHEIBE, FÜR KORBFÜHRUNG KL.3 RONDELLE POUR GUIDE PANIER CL.3 ARANDELA X GUIA CESTA CL. 3	
4	EU42092	GUIDA FILTRO ASPIRAZIONE U70 GUIDE, EXHAUST. FILTER U70 FÜHRUNG, ABSAUG.FILTER U70 GUIDE FILTRE ASPIRATION U70 GUIA FILTRO ASPIRACION U70	
5	EU75661	FILTRO ASPIRAZIONE POMPA FILTER FILTER FILTRE FILTRO	
6	EU42582	TROPPOPIENO OVERFLOW	
7	EUCGR4131NT	O-RING 4131 VITON NERO SH.70 O-ring 4131 BLACK SCREW SH.70 O-RING 4131 SCHWARZE SCHRAUBE SH.70 O-RING 4131 VIS J11312 SH.70 O-RING 4131 VITON NEGRO SH. 70	
8	EU926049	PRESSOSTATO 761999 180-70 PRESSURE SWITCH 761999 180-70 DRUCKSCHALTER 761999 180-70 PRESSOSTAT 761999 180-70 PRESOSTATO 761999 180-70	
9	EU143253	TUBO SILICONE 3X8 SILICON PIPE 3X8 SILIKONSCHLAUCH 3X8 TUYAU SILICONE 3X8 TUBO SILICONA 3X8	
10	EU456002	OR 48x6,2 O-ring 48x6,2 O-Ring 48x6,2 OR 48x6,2 OR 48x6,2	
11	EU80398	RESIST. 9,5KW 230/400V (1GEL7R624001) RESIST. 9,5KW 230/400V (1GEL7R624001)	
12	EU209039	DOSAT.PERIST.DETERG.NON REG.(NPG-3)BLU DOSING DETERGENT PUMP SPÜLMITTELBEHÄLTER POMPE DOSEUR PERIST. DETER. NON REG. DOSSIFIC.PERIST.DETERGENTE NO REG.	
13	EU209036	DOSAT.PERIST.BRILLANTANTE+NR P/F NPG DOSING PUMP RINSE-AID KLARSPÜLER POMPE DOSEUR PERISTALTIQUE RINCAGE DOSIFIC.PERIST. ABRILLANTADOR NO REG.	
14	EUH.775601	TUBO 4x6 CRISTAL BLUE PVC PIPE 4x6 CRISTAL BLUE PVC ROHR 4x6 CRISTAL BLAU PVC TUYAU 4x6 CRISTAL BLEU PVC TUBO 4x6 CRISTAL AZUL PVC	
15	EU143266	TUBETTO SIL.5X10 MP2NERO+V.I(SEKO) TUBE 5X10 FLASCHEN 5X10 TUBE 5X10 TUBITO SILICONA 5X10 EMPALMES+VIROLAS	

16	EU143267	TUBETTO 6X10 TUBE 6X10 FLASCHEN 6X10 TUBE 6X10 TUBITO SANTOPRENE 6X10 EMPALMES+VIROLAS	
17	EU143005	TUBO PRESS.TP 5x11 (CASER/15/NL C4N) PIPE, PRESSURE SWITCH TP 5x11 (CASER/15/NL C4N) SCHLAUCH TP 5X11 (CASER/15/NL C4N) TUYAU PRESS.TP 5x11 (CASER/15/NL C4N) TUBO PRES. TP 5x11 (CASER/15/NL C4N)	
18	EU423010	FASCETTA D8X12X7,5 TIPO TORRO ACC.W2 CLAMP, D8X12X7,5 TYPE TORRO ACC.W2 SCHELLE, D8X12X7,5 TYP TORRO ACC.W2 BANDE DE SERR. D8X12X7,5 TYPE TORRO ACC.W2 ABRAZADERA D8X12X7,5 TIPO TORRO ENC. W2	
19	EU121075	FILTRO ASPIR.INOX(775239-001) FILTER, SUCT.INOX (775239-001) FUSSFILTER FILTRE ASPIR.INOX(775239-001) FILTRO ASPIR. INOX(775239-001)	
20	EUSPP4	TUBO PLAST 4X6 PIPE, PLAST. 4X6 ROHR, KUNST. 4X6 TUYAU PLAST. 4X6 TUBO PLAST 4X6	
21	EU468151	RACCORDO ENTRATA SAPONE CPL NM * SALDATO UNION, EXTRA DET. CPL NM * WELDED TANKEINLAUF CPL NM* RACCORD ENTREE SAVON CPL NM * SOUDE EMPALME ENTRADA JABON CPL NM * SOLDADO	
22	EUCFF10073	FASCETTA A FILO 10073 COLLIER DE SERRAGE EN FIL D'ACIER 10073 SCHLAUCHSCHELLE 10073 WIRE HOSECLAMP 10073 ABRAZADERA CON HILO 10073	
23	EU417120	DADO PLASTICA GRIGIO PLASTIC NUT KUNSTSTOFFMUTTER 1-1/4 ECROU EN PLASTIQUE TUERCA PLASTICO GRIS	
24	EU437098	GUARNIZIONE NUOVA CAMP.PRESS. PACKING FOR AIR TRAP OF PRESSURE SWITCH DICHTUNG FUER LUFTFALLE JOINT PRISE D'AIRE PRESSOSTAT JUNTA NUEVA CAMP.PRES.	
25	EU107012	CAMPANA PRESSOSTATO (L) RV40-50-CAPOTE AIR TRAP LUFTFALLE PRISE D'AIR CAMPANA PRESOSTATO (L) RV40-50-CAPOTA	
45	EU75871	PILETTA SCARICO DRAIN CONNECTION ABLAUFGARNITUR RACCORD DE VIDANGE ACCESORIO DE DRENAJE	
46	EU75873	GUARNIZIONE PACKING DICHTUNG JOINT JUNTA IMPULSION INF. CAPOT RV.	
47	EU75872	DADO PILETTA SCARICO RING NUT KUNSTSTOFFMUTTER ÉCROU EN PLASTIQUE TUERCA DE PLÁSTICO	

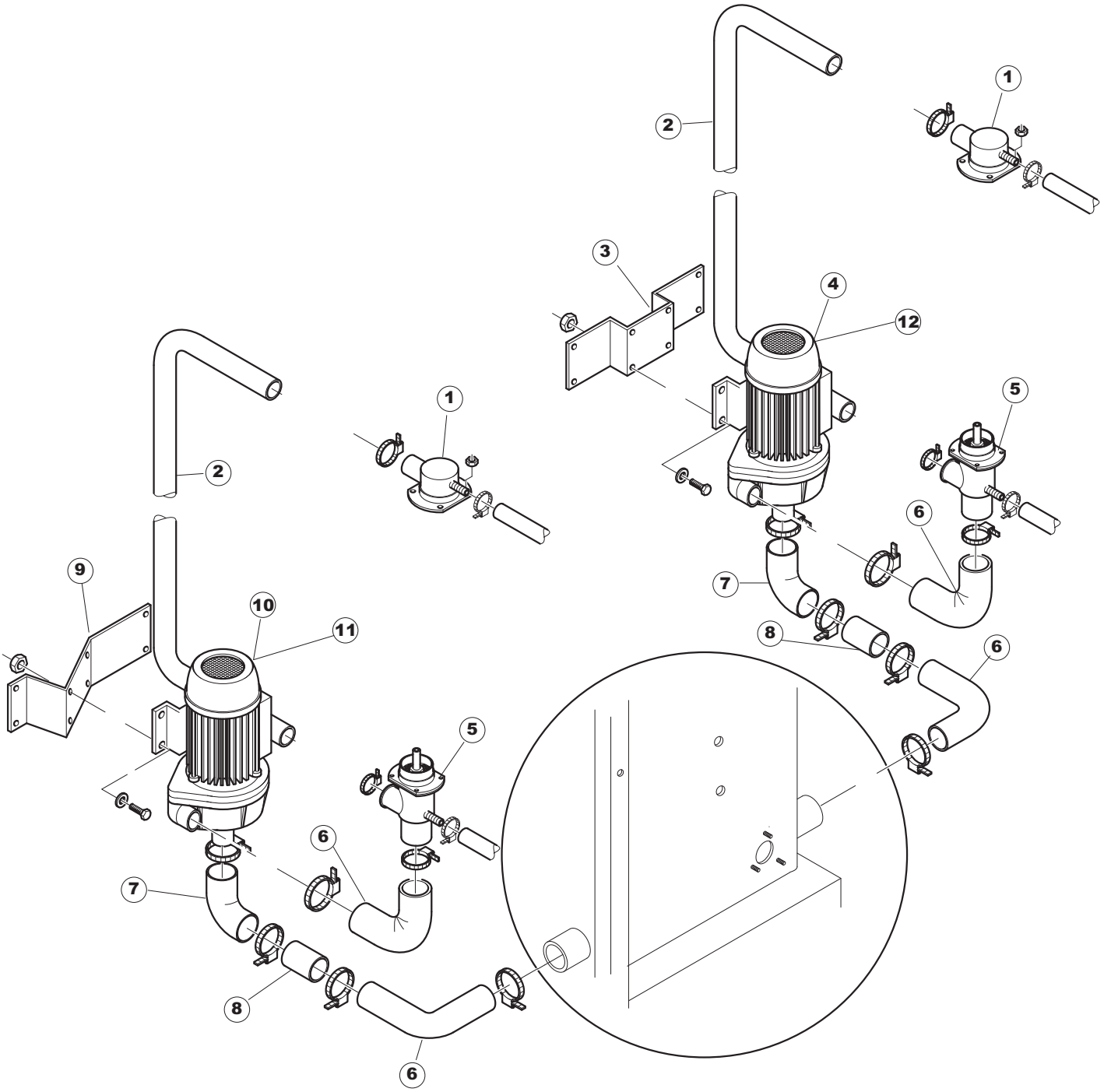
1
2
3
4
5
6
7
8
9
10
11
12

Listino componenti per pagina 4

1	EU4205901	RACCORDO LANCIA LAV.SUP.EW610H UNION, WASH.ARM UPP.EW610H VERBINDUNGSST., SPÜLARM OB.EW610H RACCORD RAMPE DE LAV.SUP.EW610H EMPALME LANZA LAV. SUP. EW610H	
2	EU43555	TUBO PIPE ROHR TUYAU TUBO LAVADO	
4	EU929174	POMPA 4HP 230/400-50 RUOT.(2250/C) PUMP 4HP 230/400-50 ROTAT.(2250/C) PUMPE 4HP 230/400-50 DREH.(2250/C) POMPE 4HP 230/400-50 PIV.(2250/C) BOMBA 4HP 230/400-50 RUOT. (2250/C)	
5	EU4206301	RACCORDO LANCIA LAV.INF.EW610.. UNION, WASH.ARM LOW.EW610.. VERBINDUNGSST., SPÜLARM UNTEN EW610.. RACCORD RAMPE DE LAV.INF.EW610.. EMPALME LANZA LAV. INF. EW610. .	
6	EU929164	GOMITO IN GOMMA P2703 SAIAG ELBOW, RUBBER P2703 SAIAG KNIESTÜCK, GUMMI P2703 SAIAG COUDE EN CAOUTCHOUC P2703 SAIAG CODO DE GOMA P2703 SAIAG	
7	EU926056	GOMITO GOMMA ASPIRAZIONE POMPA 120/140 ELBOW, RUBBER, EXHAUST. PUMP 120/140 KNIESTÜCK, GUMMI, ABSAUG.PUMPE 120/140 COUDE CAOUTCHOUC ASPIRATION POMPE 120/140 CODO GOMA ASPIRACION BOMBA 120/140	
8	EU42028	TRONCHETTO ASPIRAZIONE PUMP SUCTION ANSAUGSTUTZEN RACCORD D'ASPIRATION TRONCO ASPIRACION (EMBUTIDO)	
9	EU43316	SUPPORTO SINISTRO POMPA LAVAGGIO LP301 PIEGATO FINI BRACKET	
10	EU929175	POMPA 4HP 230/400-50 RUOT.(2250/C) PUMP 4HP 230/400-50 ROTAT.(2250/C) PUMPE 4HP 230/400-50 DREH.(2250/C) POMPE 4HP 230/400-50 PIV.(2250/C) BOMBA 4HP 230/400-50 RUOT. (2250/C)	
11	EUDPE453SHZ	ELETTROPOMPA 4HA 230/400-60 HX RUOTATA ELECTROPUMP 4HP 230/400-60 HZ ELEKTROPUMPE 4HP 230/400-60HZ ELECTROPOMPE 4HP 230/400-60HZ ELECTROB. P 4HP 230/400-60HZ GIR. (2250/C)	
12	EUDPE453DHZ	EL.P 1HP 230/400V-3PH-60HZ RUOT. 2250/C MOTORPUMP 1HP 230/400V-3PH-60HZ 2250/C ELEKTROPUMPE 1HP 230/400V-3PH-60HZ 2250/C EL.P 1HP 230/400V-3PH-60HZ 2250/C ELECTROB. 1HP 230/400V-3PH-60HZ GIR. 2250/C	

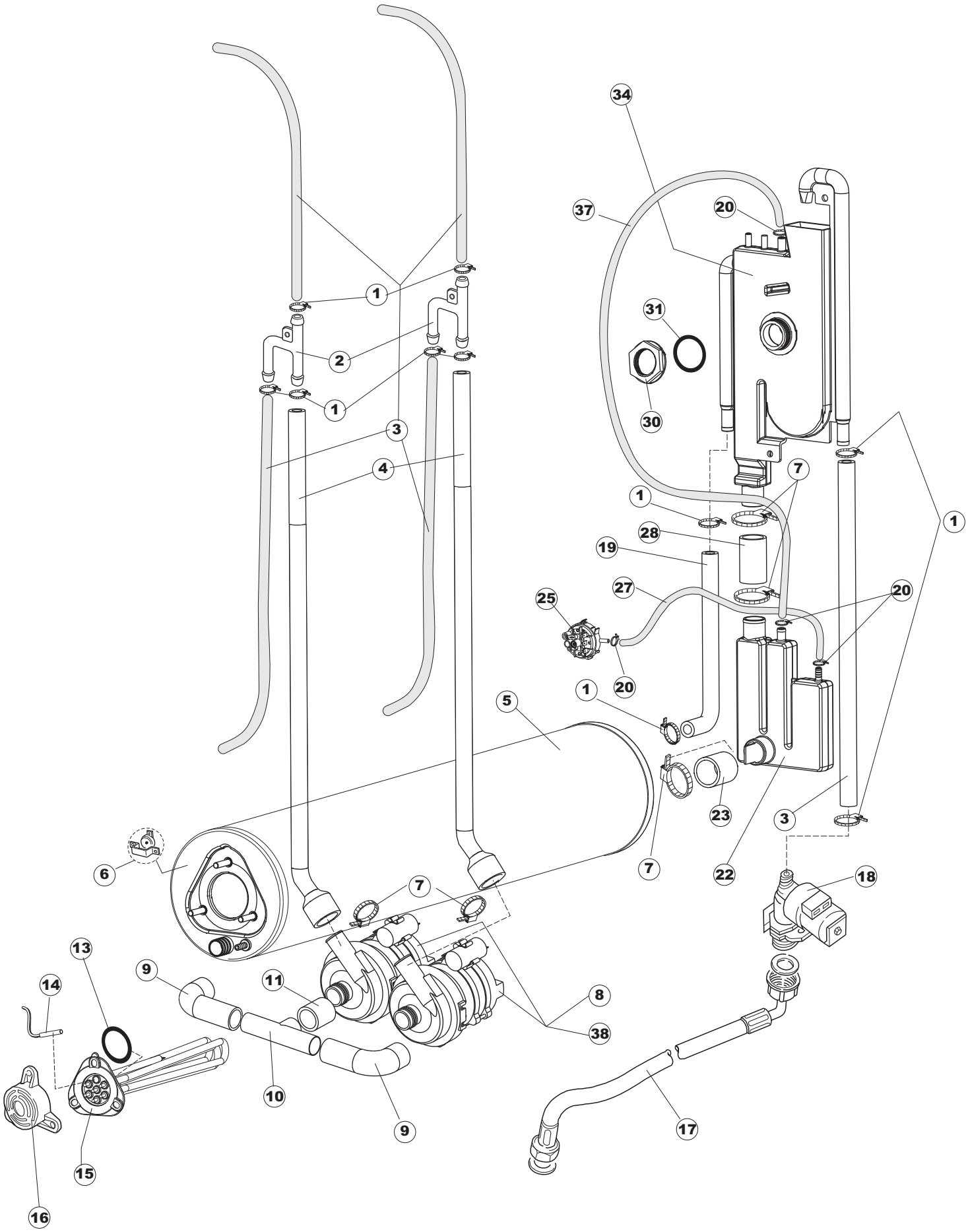
34
37
20
31
30
1
2
1
3
4
7
1
28
19
27
25
20
20
1
5
1
23
3
7
22
18
6
7
13
9
11
8
14
38
10
9
17
15
16

Listino componenti per pagina 5

1	EU927322	FASCETTA NASTRO 14-24 CLAMP, TAPE 14-24 SCHLAUCHSCHELLE 12-22 BANDE DE SERRAGE CONVOYEUR 14-24 ABRAZADERA CINTA 12-22	
2	EU143173	GIUNZIONE RISC.PLAST - SOS DA 143268 JOINT, RINSE PLAST.35/40/50 VERBIND., NACHSPÜLEN KUNST.35/40/50 JOINT RINC.PLAST.35/40/50 UNION ENJUAGUE PLAST. 35/40/50	
3	EU143010	TUBO PRESS.TP 12X19.5 PIPE, PRESSURE SWITCH TP 12X19.5 ROHR, DRUCKSCHALTER TP 12X19.5 TUYAU PRESS.TP 12X19.5 TUBO PRES. TP 12X19. 5	
4	EU41525	TUBO MANDATA RISCIACQUO (CRP) PIPE, DELIVERY PIPE FOR RINSE (CRP) ZUFLUSSROHR FÜR NACHSPÜLEN (CRP) TUYAU REFOULEMENT RINCAGE (CRP) TUBO IMPULSION ENJUAGUE (CRP)	
5	EU43550	BOILER 17 LITRI BOILER BOILER RECHAUFFEUR CALENTADOR 17LT	
6	EU926189	TERMOSTATO BOILER SIC.95ø THERMOSTAT, BOILER, SAF.95ø SICHERHEITSTHERMOSTAT BOILER 95° THERMOSTAT CHAUDIERE SEC. 95ø TERMOSTATO CALENTADOR SEG. 95ø	
7	EUCFS18	FASCETTA A VITE TORRO 20-32/9 CLAMP, HOSE-TYPE TORRO 20-32/9 SCHLAUCHSCHELLE 20-32/9 BANDE DE SERRAGE A VIS TORRO 20-32/9 ABRAZADERA CON TORNILLO TORRO 20-32/9	
8	EU80627	ELETTROPOMPA 200W 230V-1PH-50HZ CON CONDENSATOR PUMP PUMPE POMPE ELECTROBOMBA ENJUAGUE 200W	
9	EU43565	TUBO PIPE ROHR TUYAU TUBO ENJUAGUE	
10	EU43560	MANICOTTO INOX COUPLING MUFFE MANCHON MANGUITO INOX	
11	EU43564	MANICOTTO COUPLING MUFFE MANCHON MANGUITO LAVADO	
13	EU456002	OR 48x6,2 O-ring 48x6,2 O-Ring 48x6,2 OR 48x6,2 OR 48x6,2	
14	EU231016	SONDA TEMPERATURA TEMP. PROBE TEMPERATURSONDE SONDE SONDA TEMPERATURA (AMPOLLA ACERO)	
15	EU80398	RESIST. 9,5KW 230/400V (1GEL7R624001) RESIST. 9,5KW 230/400V (1GEL7R624001)	
16	EU69870	PROTEZIONE RESISTENZA BOILER BOILER HEATING ELEMENT PROTECTION HEIZUNGSCHUETZ DES WARMWASSERBEREITERS PROTECTION RESISTANCE BOILER PROTECCION RESISTENCIA CALENTADOR	

17	EU929169	TUBO DI CARICO DEL TERMOPLASTICO PIPE, THERMOPLASTIC DELIVERY ZULAUFSCHLAUCH, WASSER THERMOPLAST TUYAU DE CHARG. DU THERMOPLASTIQUE TUBO DE CARGA DEL TERMOPLASTICO	
18	EU240018	VALVOLA DI CARICO 1 VIA CRP LOADING S.VALVE 1-WAY CRP ZUFLUSSVENTIL 1-WEG CRP SOUPAPE DE CHARG. 1 VOIE CRP VALVULA DE CARGA 1 VIA CRP	
19	EU127098	MANICOTTO SFIATO BOILER CRP->BT COUPLING LA50 MUFFE LA50 MANCHON LA50 MANGUITO ALIVIAD. CALENTADOR CRP->BT LA50	
20	EU423026	FASCETTA DOPPIO FILO 10.7 CLAMP SCHELLE COLLIER	
22	EU144032	SISTEMA CARICAMENTO CRP CON CAMP.PRESS. PLASTIC AIRGAP AIR GAP GEOFFNETER BEHAELTER RESERVOIR AIRGAP SISTEMA CARGA CRP	
23	EU127095	MANICOTTO BOILER->SISTEMA CRP MANIFOLD MUFFE MANGUITO CALENTADOR->SISTEMA CRP	
25	EU224002	PRESSURE SWITCH - 110/60 PRESSURE SWITCH - 110/60 PRESSURE SWITCH - 110/60 PRESSURE SWITCH - 110/60 PRESSURE SWITCH - 110/60	
27	EU143131	TUBO GOMMA PIPE SCHLAUCH FUER DRUCKSCHALTER TUYAU VER CODIGO 143005	
28	EU929171	TUBO GOMMA 20X30 HOSE, RUBBER 20X30 SCHLAUCH, GUMMI 20X30 TUYAU CAOUTCHOUC 20X30 TUBO GOMA 20X30	
30	EU417125	DADO IN PLAST.CON COLLARE(171571) NUT MUTTER ECROU TUERCA DE PLAST.CON COLLAR(171571)	
31	EU437104	GUARNIZIONE D45D33S2 EPDM 70SH RUBBER GASKET DICHTUNG JOINT JUNTA D45D33S2 EPDM 70SH	
34	EU144021	AIRGAP SPECIALE LA50 PLASTIC AIRGAP AIR GAP GEOFFNETER BEHAELTER AIRGAP SPECIAL LA50 AIRGAP ESPECIAL LA50	
37	EUH.165168	TUBO PVC 6X9 CRISTAL TRASP. RAUCLAIR PVC PIPE PVC SCHLAUCH TUYAU PVC * TUBO PVC 6X9 CRISTAL TRANSPARENTE	
38	EU80629	ELETTROPOMPA 200W 220/240V-1PH-60HZ CON CONDENSA PUMP 60HZ PUMPE 60HZ POMPE 60HZ ELECTROBOMBA ENJUAGUE 200W 60HZ	

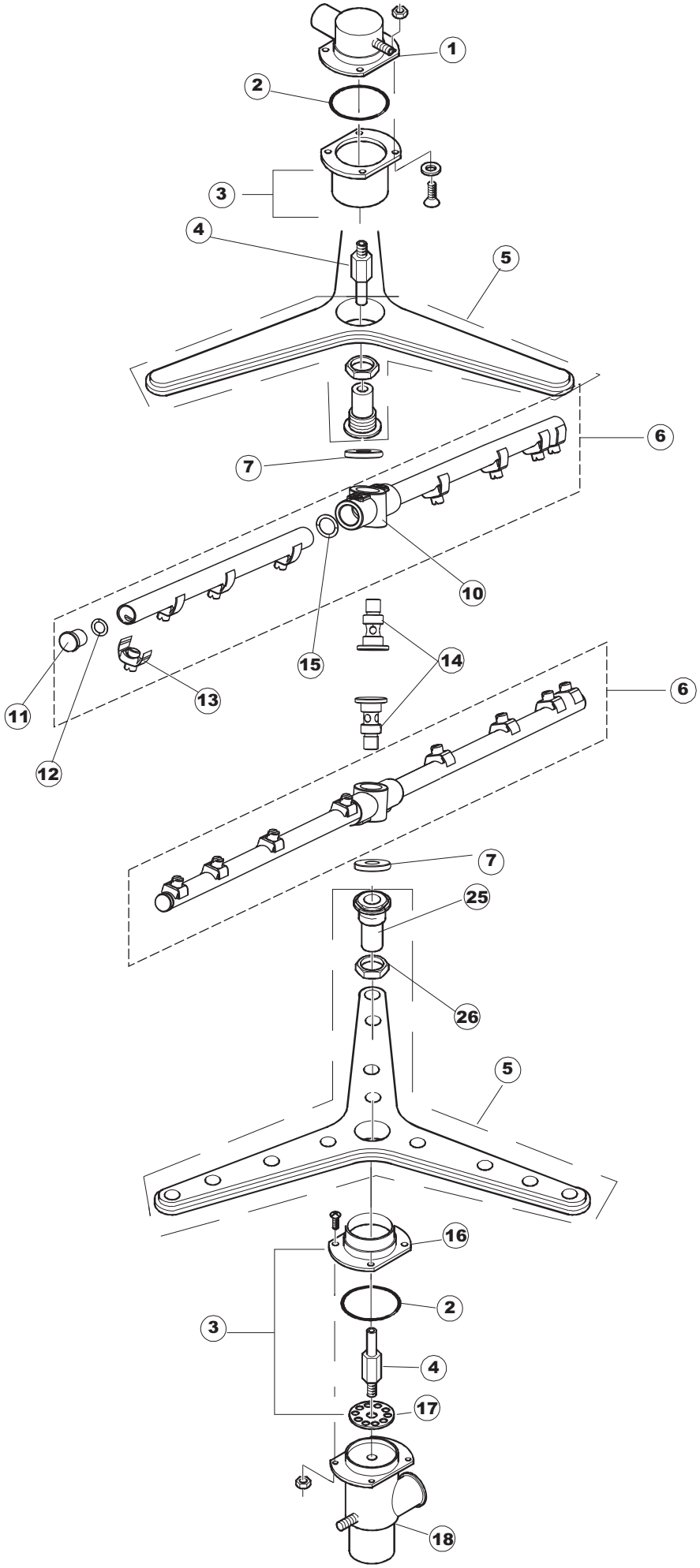
1
2
3
4
5
6
7
10
11
12
13
14
15
6
7
25
26
5
16
2
3
4
17
18

Listino componenti per pagina 6

1	EU4205901	RACCORDO LANCIA LAV.SUP.EW610H UNION, WASH.ARM UPP.EW610H VERBINDUNGSST., SPÜLARM OB.EW610H RACCORD RAMPE DE LAV.SUP.EW610H EMPALME LANZA LAV. SUP. EW610H	
2	EU926252	OR 4275 O-ring 4275 O-Ring 4275 OR 4275 OR 4275	
3	EU41064CP	CONTROFL.SUP.LANCIA LAV.U61/61H COUNTER-FLANGE, SUPP. FOR ARM-WASH U61/61H GEGENFLANSCH, OB. FÜR SPÜLLANZE U61/61H CONTRE-BRIDE SUP.RAMPE DE LAV.U61/61H CONTRABRIDA SUP. LANZA LAV. U61/61H	
4	EU42053	PERNO LANCIA LAV.INFER.U61 PIN, LOW.WASH. WASH-ARM U61 ZAPFEN, UNT.SPÜLLANZE U61 PIVOT RAMPE DE LAV.INFER.U61 PERNO LANZA LAV. INFER. U61	
5	EU929196	LANCIA DI LAV.TRIANGOLARE COMPL.U70.. WASH-ARM, WASH. - TRIANGULAR COMPL.U70.. SPÜLLANZE - DREIECK. KOMPL.U70.. RAMPE DE LAV.TRIANGULAIRE COMPL.U70.. LANZA DE LAV. TRIANGULAR COMPL. U70. .	
6	EU42677	BRACCIO RISCIACQUO	
7	EU80679	GHIERA ULTRA RINSE INOX NUT RING BAGUE VIROLA ULTRA RINSE INOX	
10	EU69632	CORPO PETTINE ARM BODY KOERPER DES NACHSPUELARMES CORPS BRAS CUERPO PEINE ENJUAGUE.	
11	EU926132	TAPPO PL.X BRACCIO DI RISC.(DWT312) CAP, PLASTIC FOR WASH. ARM (DWT312) PFROPFEN, KUNST. FÜR NACHSPÜLARM (DWT312) BOUCHON PL.POUR BRAS DE RINC.(DWT312) TAPON PL. X BRAZO DE ENJUAGUE (DWT312)	
12	EUCGR106	O-RING 106 GOMMA NITR. (6,75 X 1,78 NBR) O-ring 106 NITRILE RUBBER (6,75 X 1,78 NBR) O-RING 106 NITRILGUMMI (6,75 X 1,78 NBR) O-RING 106 CAOUTCHOUC NITRYLE (6,75 X 1,78 NBR) VER CÓDIGO 456030	
13	EU140036	SPRUZZO RISCIACQUO D.2,5 X TUBO D12 RINSE JET DUESE GLICEUR ROCIADOR ENJUAGUE D. 2,5	
14	EU80644	PERNO PIVOT BRAS RINCAGE	
15	EU456019	OR 2037 O-ring 2037 O-Ring 2037 OR 2037 OR 2037	
16	EU41064	CONTROFL SUPP LANCIA LAV LP SUPPORT UNTERLAGE SUPPORT CONTRABRIDA SUP. LANZA LAV. LP	
17	EU41185	PARZIALIZZATORE PL. DRAUGHT SHUTTER PL. DROSSELGERAT PL. ETRANGLEUR PL. PARCIALIZADOR PL.	

18	EU4206301	RACCORDO LANCIA LAV.INF.EW610.. UNION, WASH.ARM LOW.EW610.. VERBINDUNGSST., SPÜLARM UNTEN EW610.. RACCORD RAMPE DE LAV.INF.EW610.. EMPALME LANZA LAV. INF. EW610. .	
25	EU926129	SUPPORTO/MOZZO LANCIA LAVAGGIO SUPPORT/HUB FOR WASH-ARM HALTER/NABE FÜR SPÜLLANZE SUPPORT/MOYEU RAMPE DE LAVAGE SOPORTE/CUBO LANZA LAVADO	
26	EU80314	DADO LANCIA LAVAGGIO GRIGIO NUT, WASH-ARM GREY SCHRAUBENMUTTER, SPÜLLANZE GRAU ECROU RAMPE DE LAVAGE GRIS VER CODIGO 926128	

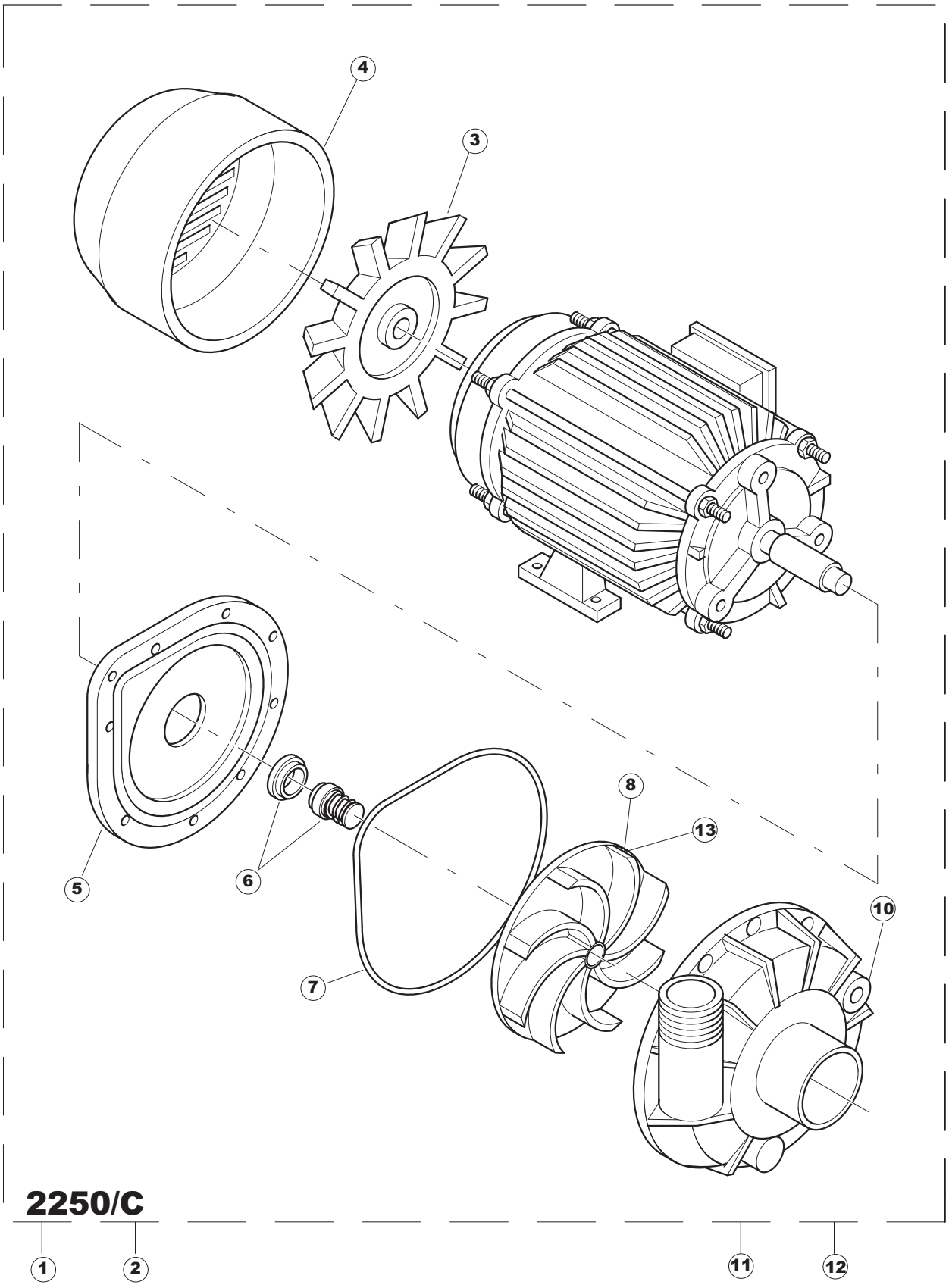
4
3
8
13
10
5
6
7
2250/C
1
2
11
12

Listino componenti per pagina 7

1	EU929174	POMPA 4HP 230/400-50 RUOT.(2250/C) PUMP 4HP 230/400-50 ROTAT.(2250/C) PUMPE 4HP 230/400-50 DREH.(2250/C) POMPE 4HP 230/400-50 PIV.(2250/C) BOMBA 4HP 230/400-50 RUOT. (2250/C)	
2	EU929175	POMPA 4HP 230/400-50 RUOT.(2250/C) PUMP 4HP 230/400-50 ROTAT.(2250/C) PUMPE 4HP 230/400-50 DREH.(2250/C) POMPE 4HP 230/400-50 PIV.(2250/C) BOMBA 4HP 230/400-50 RUOT. (2250/C)	
3	EU929189	VENTOLA ELETTROPOMPA 2250 FAN, MOTORPUMP 2250 GEBL., ELEKTROPUMPE 2250 VENT. ELECTROPOMPE 2250 VENTIL. ELECTROBOMBA 2250	
4	EU929188	COPRIVENTOLA ELETTROPOMPA 2250 FAN COVER, FOR MOTORPUMP 2250 GEBL.HAUBE, FÜR ELEKTROPUMPE 2250 COUVRE-VENT. ELECTROPOMPE 2250 CUBREVENTILADOR ELECTROBOMBA 2250	
5	EU929190	FLANGIA EL.POMPA 250 FLANGE, MOTORPUMP 250 FLANSCH, ELEKTROPUMPE 250 BRIDE ELECTROPOMPE 250 BRIDA ELECTROBOMBA 250	
6	EU929179	TENUTA MECCANICA PER POMPA 2250 SEAL, MECH. FOR PUMP 2250 DICHTUNG, MECH. FÜR PUMPE 2250 JOINT MECANIQUE POUR POMPE 2250 SELLO MECANICO PARA BOMBA 2250	
7	EU929180	OR POMPA 2250 O-ring PUMP 2250 O-Ring PUMPE 2250 OR POMPE 2250 OR BOMBA 2250	
8	EU929181	GIRANTE PER POMPA 2250/75-2250 PUMP IMPELLER 2250/75-2250 LAUFRAD, PUMPE 2250/75-2250 ROUE POUR POMPE 2250/75-2250 ROTOR PARA BOMBA 2250/75-2250	
10	EU929191	CORPO POMPA 2290/2250 PUMP SHELL, 2290/2250 PUMPENGEHAUSE, 2290/2250 CORPS POMPE 2290/2250 CUERPO BOMBA 2290/2250	
11	EUDPE453SHZ	ELETTROPOMPA 4HA 230/400-60 HX RUOTATA ELECTROPUMP 4HP 230/400-60 HZ ELEKTROPUMPE 4HP 230/400-60HZ ELECTROPOMPE 4HP 230/400-60HZ ELECTROB. P 4HP 230/400-60HZ GIR. (2250/C)	
12	EUDPE453DHZ	EL.P 1HP 230/400V-3PH-60HZ RUOT. 2250/C MOTORPUMP 1HP 230/400V-3PH-60HZ 2250/C ELEKTROPUMPE 1HP 230/400V-3PH-60HZ 2250/C EL.P 1HP 230/400V-3PH-60HZ 2250/C ELECTROB. 1HP 230/400V-3PH-60HZ GIR. 2250/C	
13	EURAG28HZ	GIRANTE PER ELETTROPOMPA 2250/75-2250 A 60HZ ELECTROPUMP IMPELLER 2250/75-2250 60HZ FLUEGELRAD FUER MOTORPUMPE 2250/75- 2250 60HZ TURBINE POUR MOTOPOMPE 2250/75-2250 60HZ ROTOR	