SIMAG

SDE 50

SDE 64

R 134 A VERSION

HE (High Efficiency)

SPARE PARTS LIST
CATALOGO RICAMBI
CATALOGUE PIÈCES DÉTACHÉES
ERSATZTEILENKATALOG

REV. 10/2015

PAGE PAGINA PAGE SEITE	TABLE OF CONTENTS	INDICE	TABLE DES MATIERES	INHALTVERZEICHNIS
1	TABLE OF CONTENTS	INDICE	TABLE DES MATIERES	INHALTVERZEICHNIS
2/3	UNIT PANELS	ASSIEME MOBILE	ENS. CAROSSERIE	MACHINE GEHAUSE
4/5	REFRIGERANT SYSTEM AIR COOLED	SISTEMA REFRIGERANTE RAFFR. AD ARIA	CIRCUIT FRIGORIFIQUE REFROID. A AIR	GEFRIERSYSTEM LUFTGEKUEHLT
6/7	REFRIGERANT SYSTEM WATER COOLED	SISTEMA REFRIGERANTE RAFFR. AD ACQUA	CIRCUIT FRIGORIFIQUE REFROID. A EAU	GEFRIERSYSTEM WASSERGEKUEHLT
8/9	WATER SYSTEM	CIRCUITO IDRAULICO	CIRCUIT HYDRAULIQUE	WASSER SYSTEM
10/11	CONTROL BOX	SCATOLA DI CONTROLLO	BOITE ELECTRIQUE	SCHALTSCHRANK

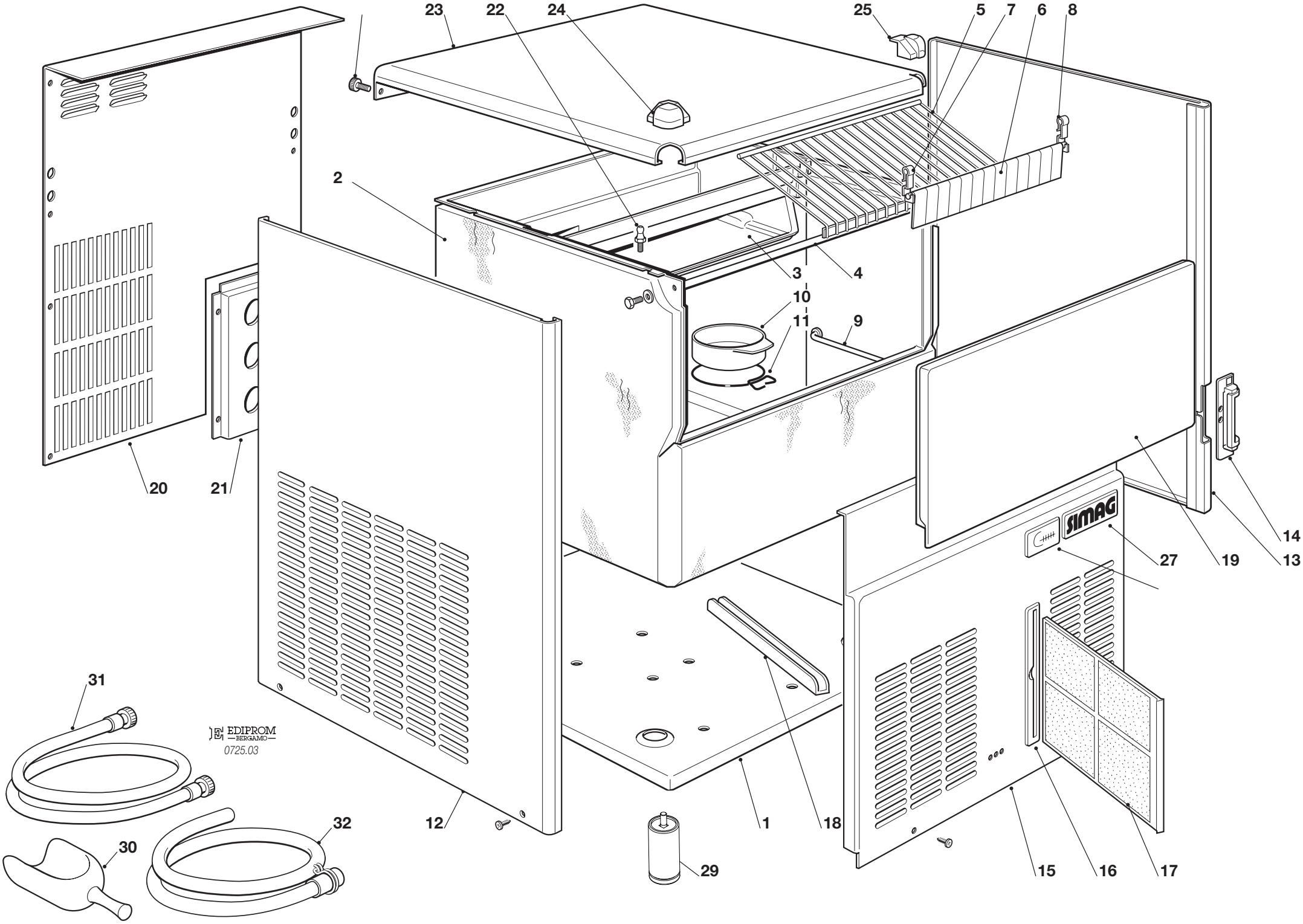
23
22
24
25
5
7
6
8
2
3
4
10
11
9
20
21
14
13
19
27
SIMAG
31
EDIPROM
BERGAMO
0725.03
32
30
12
1
18
29
15
16
17

SDE 50- SDE 64 -UNIT PANELS - ASSIEME MOBILE - ENS. CARROSSERIE - MACHINE GEHAUSE-

ITEM NO POS NO REP. NO REF. NO	PART NO - CODICE REFERENCE - STUECK NR.	DESCRIPTION	DESCRIZIONE	DESIGNATION	BESCHREIBUNG
1	702510 00	BASE	PIASTRINA DI BASE	PLAQUE DE BASE	GRUNDPLATTE
2	782094 05R 782094 06R	INSULATED BIN ASSY SDE 50 INSULATED BIN ASSY SDE 64	ASSIEME CELLA ISOLATA SDE 50 ASSIEME CELLA ISOLATA SDE 64	ENS. CABINE SDE 50 ENS. CABINE SDE 64	ISOLIEREISSPEICHER SDE 50 ISOLIEREISSPEICHER SDE 64
3	660635 04	EVAPORAT. HOUSING	INVOLUCRO EVAPORAT.	CHAMBRE INTERIEUR	CELLE INTERN
4	732016 08	BIN DOOR BRACKET	ASTA PORTELLO	TIGE PORTE	KLAPPENACHSE
5	650714 00	ICE DEFLECTOR	GRIGLIA SCORRIMENTO CUBETTI	GRILLE GLISSEMENT GLAÇON	ABGLEITGRILL
6	783172 00R	CURTAIN ASSY	ASSIEME TENDINA	ENS. LAMELLE	ABDECKKLAPPE GESAMTHEIT
7	660388 00	LEFT CURTAIN SUPPORT	SUPP. TENDINA SINISTRO	SUPP. LAMELLE GAUCHE	LINKE ABDECKLAPPE HALTERUNG
8	660388 01	RIGHT CURTAIN SUPPORT	SUPP. TENDINA DESTRO	SUPP. LAMELLE DROITE	RECHTE ABDECKLAPPE HALTER.
9	732017 02	BULB HOLDER	TUBO PORTABULBO	TUBE PORTEBULBE	FUEHLERHALTER
10	660741 00	PLASTIC PLUG	TAPPO INVOLUCRO EVAPORAT.	BOUCHON EN PLASTIQUE	PLASTIKSTOPFEN
11	460047 01	SPRING	MOLLA	RESSORT	FEDER
12	722307 00 722311 00	LEFT PANEL SDE 50 LEFT PANEL SDE 64	PAN.LO LAT. SX SDE 50 PAN.LO LAT. SX SDE 64	JOUE GAUCHE SDE 50 JOUE GAUCHE SDE 64	LINKE ABDECKL. HALTER. SDE 50 LINKE ABDECKL. HALTER. SDE 64
13	722306 00 722310 00	RIGHT PANEL SDE 50 RIGHT PANEL SDE 64	PAN.LO LAT. DX SDE 50 PAN.LO LAT. DX SDE 64	JOUE DROITE SDE 50 JOUE DROITE SDE 64	RECHTEGEHÄUS. EDELST. SDE 50 RECHTEGEHÄUS. EDELST. SDE 64
14	660883 01	FRONT SWITCH PLASTIC PROT	CARTER PROTEZIONE INTERRUT	CARTER PROTECTION INTERRUPT	SCHALTERABDECKUNG
15	722309 00 722309 01 722312 00 722312 01	FRONT PANEL AIR SDE 50 FRONT PANEL WATER SDE 50 FRONT PANEL AIR SDE 64 FRONT PANEL WATER SDE 64	PAN.LO ANT. ARIA SDE 50 PAN.LO ANT. ACQUA SDE 50 PAN.LO ANT. ARI A SDE 64 PAN.LO ANT. ACQUA SDE 64	PAN.AU AVANT . AIR SDE 50 PAN.AU AVANT . EAU SDE 50 PAN.AU AVANT . AIR SDE 64 PAN.AU AVANT . EAU SDE 64	VOR.WAND ED.T. LUFT SDE 50 VOR.WAND ED.T. WASS. SDE 50 VOR.WAND ED.T. LUFT SDE 64 VOR.WAND ED.T. WASS. SDE 64
16	660889 02 660889 01	AIR FILTER SEAT SDE 50 AIR FILTER SEAT SDE 64	SEDE FILTRO ARIA SDE 50 SEDE FILTRO ARIA SDE 64	SIEGE FILTRE A AIR SDE 50 SIEGE FILTRE A AIR SDE 64	LUFTFILTERHALTER SDE 50 LUFTFILTERHALTER SDE 64
17	660888 02 660888 01	AIR FILTER SDE 50 AIR FILTER SDE 64	FILTRO ARIA SDE 50 FILTRO ARIA SDE 64	FILTRE A AIR SDE 50 FILTRE A AIR SDE 64	LUFT FILTIER SDE 50 LUFT FILTIER SDE 64
18	660887 00	SLIDE, AIR FILTER	GUIDA FILTRO ARIA	GLISSIERE FILTRE A AIR	FUHRUNF FUR LUFTFILTIER
19	782092 06R	BIN DOOR	SPORTELLO	PORTE CABINE	SPEICHERTUER
20	702324 00 702325 00	REAR PANEL SDE 50 REAR PANEL SDE 64	PANNELLO POSTERIORE SDE 50 PANNELLO POSTERIORE SDE 64	PANNEAU POSTERIEUR SDE 50 PANNEAU POSTERIEUR SDE 64	HINTERE ABDECKUNG SDE 50 HINTERE ABDECKUNG SDE 64
21	702301 00	METAL BRACKET FOR FITTING	SUPPORTO ATTACCHI	SUPPORT DE RACCORDS	METALLTRÄGER
22	650790 00	STUD	PERNO	AXE	STIFT
23	722308 00	TOP PANEL	PANNELLO SUPER. INOX	ENS. COUVERCLE	DECKEL GESAMTHEIT
24	660884 07	LEFT TOP CAP	TAPPO IN PLASTICA SINISTRO	CAPUCHON EN PLAST. GAUCHE	PLASTIK PROFEN LINK
25	660884 06	RIGHT TOP CAP	TAPPO IN PLASTICA DESTRO	CAPUCHON EN PLAST. DROITE	PLASTIK PROFEN RECHT
27	651544 00	SIMAG LOGO	TARGHETTA SIMAG	EMBLEME SIMAG	SIMAG ABGEBILDET
29	651469 00	LEG	PIEDE REGOLABILE	PIED RÉGLABE	GERÄTEFUSS
30	650071 00	ICE SCOOP	SESSOLA	SASSE	EISSCHAUFEL
31	670007 04	KIT WATER SUPPLY PIPE	KIT TUBO ALIM. ACQUA	KIT TUYAU D'ALIM. EAU	WASSER ANSCHLUSSCHLAUCH
32	060513 01	KIT WATER DRAIN PIPE	KIT TUBO SCARICO ACQUA	KIT TUYAU VIDANGE EAU	WASSER SLAUFSCHLAUCH

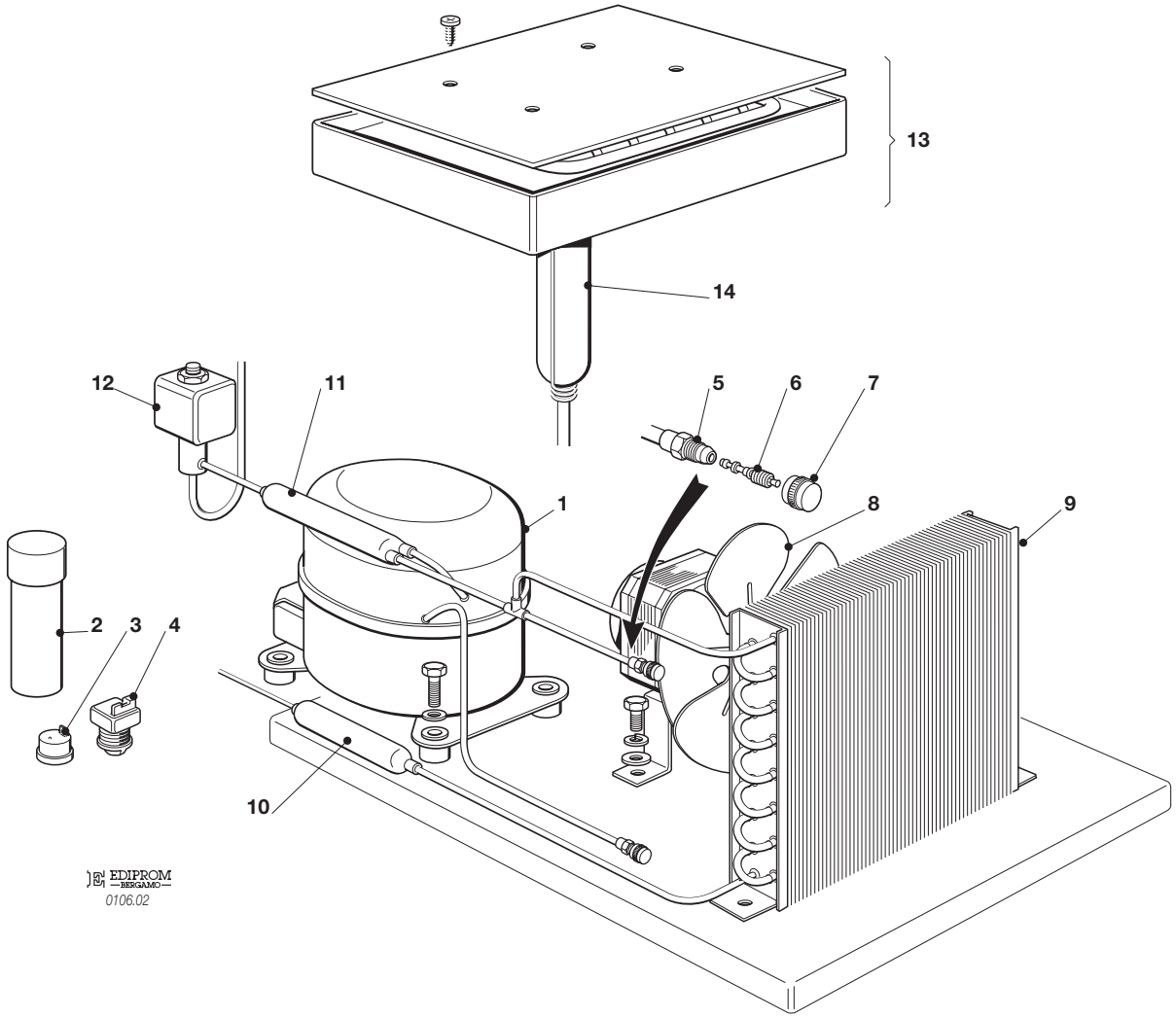
13
14
12
11
5
6
7
1
8
9
2
3
4
10
EDIPROM
BERGAMO
0106.02

SDE 50 - SDE 64 - REFRIGERANT SYSTEM AIR COOLED - SISTEMA REFRIGERANTE RAFFR. AD ARIA
CIRCUIT FRIGORIFIQUE REFROID. PAR AIR - LUFTGEKÜHLT GEFRIERSYSTEM

ITEM NO POS NO REP. NO REF. NO	PART NO - CODICE REFERENCE - STUECK NR. **SDE 50**	**SDE 64**	DESCRIPTION	DESCRIZIONE	DESIGNATION	BESCHREIBUNG
1	670100 00	670100 01	COMPRESSOR	COMPRESSORE	COMPRESSEUR	KOMPRESSOR
2	620167 29	620167 29	START CAPACITOR	CONDENSATORE D'AVVIAMENTO	CAPACITE DE DEMARRAGE	START CONDENSATOR
3	620478 03	620058 67	PROTECTOR	PROTETTORE	PROTECTEUR	SCHUTZGERAT
4	620057 31	620057 56	RELAY	RELÈ	RELAIS	RELAIS
5	650109 00		VALVE BODY	CORPO VALVOLA	CORPS DE VANNE	VENTILGEHAUSE
6	670012 00		VALVE PISTON	PISTONCINO VALVOLA	PISTON	VENTILKOLBEN
7	650106 00		VALVE CAP	CAPPUCCIO VALVOLA	CAPUCHON DE VANNE	VENTILKLAPPE
8	620419 02 620419 32	620419 33	FAN MOTOR FAN BLADE	MOTOVENTILATORE VENTOLA	MOTO-VENTILATEUR HELICE	LÜFTERMOTOR FLÜGEL
9	620420 00	620455 00	AIR COOLED CONDENSER	CONDENSATORE AD ARIA	CONDENSEUR	KONDENSATOR
10	630003 05		DRIER	FILTRO DEUMIDIFICATORE	FILTRE DESHYDRATEUR	TROCKNER
11	630137 00	630137 01	MECHANICAL FILTER	FILTRO MECCANICO	FILTRE MECANIQUE	MECHANISCHFILTERN
12	620306 48 620306 27		HOT GAS VALVE COIL HOT GAS VALVE BODY	BOBINA VALVOLA GAS CALDO CORPO VALVOLA GAS CALDO	BOBINE VANNE GAZ CHAUDS CORP VANNE GAZ CHAUDS	HEISSGAZ VENTIL SPULE VENTILGEHAUSE
13	784480 00R	784480 01R	EVAPORATOR ASSY	ASSIEME EVAPORATORE	ENS. EVAPORATEUR	VERDAMPFER
14	784444 03	784444 15	ACCUMULATOR ASSY	ASSIEME ACCUMULATORE	ENS. ACCUMULATEUR	SAMMLER UND SAUGLEITUNGEN
*	–	620499 01	PRESSURE CONTROL	PRESSOSTATO	PRESSOSTAT	PRESSOSTAT

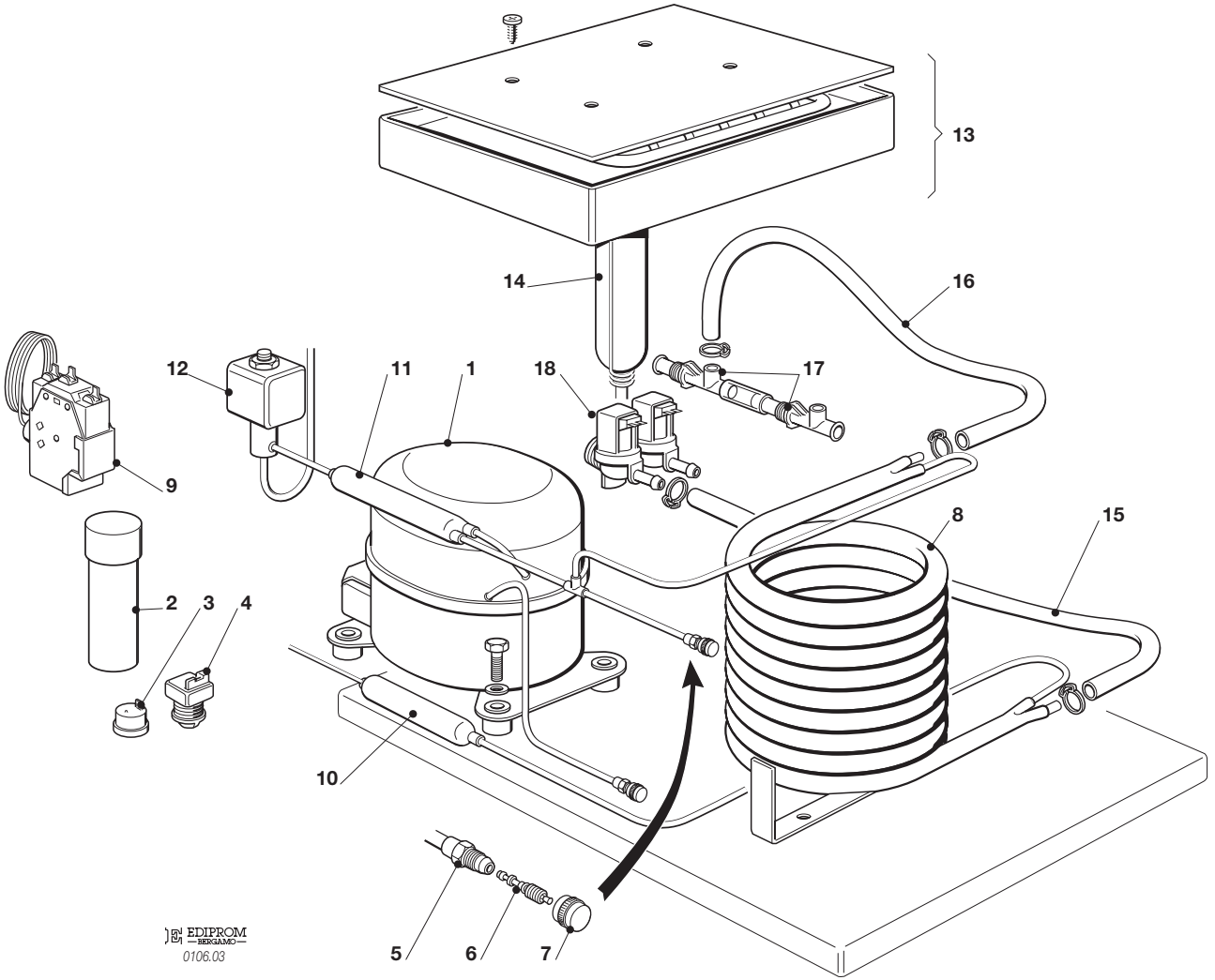
13
14
16
12
11
1
18
17
9
8
15
2
3
4
10
5
6
7
EDIPROM
BERGAMO
0106.03

SDE 50 - SDE 64 - REFRIGERANT SYSTEM WATER COOLED - SISTEMA REFRIGERANTE RAFFR. AD ACQUA
CIRCUIT FRIGORIFIQUE REFROID. PAR EAU - WASSERGEKOHL T GEFRIERSYSTEM

ITEM NO POS NO REP. NO REF. NO	PART NO - CODICE REFERENCE - STUECK NR. **SDE 50**	**SDE 64**	DESCRIPTION	DESCRIZIONE	DESIGNATION	BESCHREIBUNG
1	670100 00	67010001	COMPRESSOR	COMPRESSORE	COMPRESSEUR	KOMPRESSOR
2	620167 29	620167 29	START CAPACITOR	CONDENSATORE D'AWIAMENTO	CAPACITE DE DEMARRAGE	START CONDENSATOR
3	620478 03	620058 67	PROTECTOR	PROTETTORE	PROTECTEUR	SCHUTZGERAT
4	620057 31	620057 56	RELAY	RELÈ	RELAIS	RELAIS
5	650109 00		VALVE BODY	CORPO VALVOLA	CORPS DE VANNE	VENTILGEHAUSE
6	670012 00		VALVE PISTON	PISTONCINO VALVOLA	PISTON	VENTILKOLBEN
7	650106 00		VALVE CAP	CAPPUCCIO VALVOLA	CAPUCHON DE VANNE	VENTILKLAPPE
8	620389 00		WATER COOLED CONDENSER	CONDENSATORE ACQUA	CONDENSEUR A EAU	WASSER KONDENSATOR
9	620499 01		PRESSURE CONTROL	PRESSOSTATO	PRESSOSTAT	PRESSOSTAT
10	630003 05		DRIER	FILTRO DEUMIDIFICATORE	FILTRE DESHYDRATEUR	TROCKNER
11	630137 00	63013701	MECHANICAL FILTER	FILTRO MECCANICO	FIL TRE MECANIQUE	MECHANISCHFIL TERN
12	620306 48 620306 27		HOT GAS VALVE COI L HOT GAS VALVE BODY	BOBINA VALVOLA GAS CALDO CORPO VALVOLA GAS CALDO	BOBINE VANNE GAZ CHAUDS CORP VANNE GAZ CHAUDS	HEISSGAZ VENTI L SPULE VENTILGEHAUSE
13	784480 00R	784480 01R	EVAPORATOR ASSY	ASSIEME EVAPORATORE	ENS. EVAPORATEUR	VERDAMPFER
14	784444 03	784444 15	ACCUMULATOR ASSY	ASSIEME ACCUMULATORE	ENS. ACCUMULATEUR	SAMMLER UND SAUGLEITUNGEN
15	281900 01		PLASTIC TUBE - PER METER	TUBO PVC - PER METRO	TUYAU EN PLASTIQUE - POUR MT.	PLASTIK ROHR - PRO METER
16	281900 01		PLASTIC TUBE - PER METER	TUBO PVC - PER METRO	TUYAU EN PLASTIQUE - POUR MT.	PLASTIK ROHR - PRO METER
17	660993 00		WATER DRAIN FITTING	RACCORDO SCARICO ACQUA	RACCORD EVACUATION EAU	WASSERABFLUSSANSCHLUSSE
18	650105 70		WATER INLET VALVE	ELETTROV AL VOLA DOPPIA	VANNE ARRIVÈE EAU	ELEKTROVENTIL

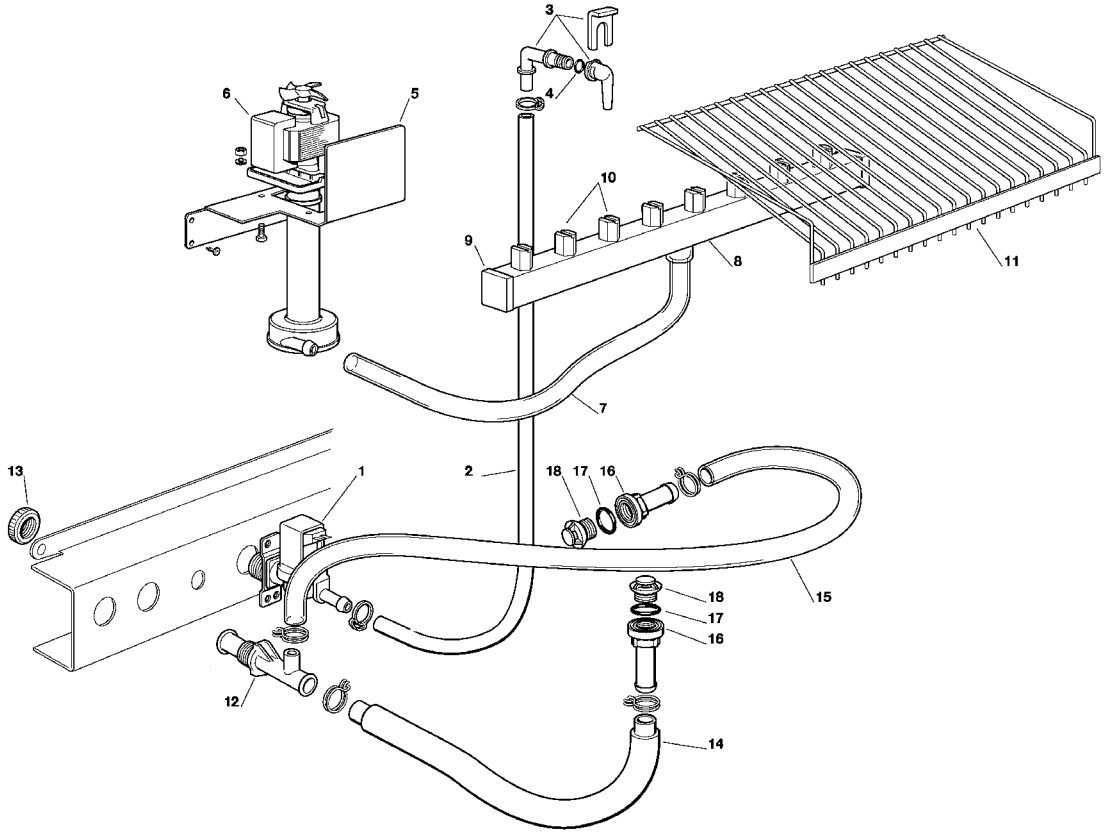
3
4
6
5
10
9
8
11
7
13
1
2
18
17
16
15
18
17
16
12
14

SDE 50-64 WATER SYSTEM - CIRCUITO IDRAULICO - CIRCUIT HYDRAULIQUE - WASSERSYSTEM

ITEM NO POS. NO REP. NO REF. NO	PART NO CODICE REFERENCE STUECK NR	DESCRIPTION	DESCRIZIONE	DESIGNATION	BESCHREIBUNG
1	**650105 66**	ELECTRIC VALVE - AIR COOLED	ELETTROVALVOLA	ELECTROVANNE	ELEKTROMAGNETVENTIL
2	**281900 01**	PLASTIC TUBE - PER METER	TUBO INGRESSO ACQUA	TUYAU EN PLASTIQUE - POUR MT.	PLASTIK ROHR - PRO METER
3	**793172 00R**	WATER INLET ELBOW ASSY	ASS. INGR. ACQUA A GOMITO	ENS. ENTRÉE EAU COUDEE	ABGENKELZULAUFROHR
4	**640041 31**	O RING	GUARNIZIONE	JOINT TORIQUE	SIMMER RING
5	**724333 00**	METAL BRACKET	SUPPORTO POMPA	SUPPORT METALLIQUE	METAL TRAEGER
6	**620433 00**	WATER PUMP SDE 50	POMPA ASSIEMATA SDE 50	POMPE A EAU SDE 50	WASSER PUMPE SDE 50
	620423 00	WATER PUMP SDE 64	POMPA ASSIEMATA SDE 64	POMPE A EAU SDE 64	WASSER PUMPE SDE 64
7	**610150 06**	PUMP INLET WATER PIPE	TUBO MANDATA POMPA	TUYAU EVACUATION	ABFLUSSROHR
8	**651559 00**	SPRAY BAR SDE 50	TUBO SPRUZZATORE SDNE 50	COLLECTEUR SDE 50	KOLLEKTOR SDE 50
	651559 01	SPRAY BAR SDE 64	TUBO SPRUZZATORE SDE 64	COLLECTEUR SDE 64	KOLLEKTOR SDE 64
9	**660557 00**	PLUG MANIFOLD	TAPPO PER SPRUZZATORE	BOUCHON POUR COLLECTEUR	STOPFEN
10	**660558 00**	SPRAYERS	SPRUZZATORI	GICLEURS	SPRÜHDÜSEN
11	**650714 00**	ICE DEFLECTOR	GRIGLIA SCORRIMENTO CUBETTI	GRILLE GLISSEMENT GLAÇON	ABGLEITGRILL
12	**640134 00**	WATER DRAIN FITTING	RACCCORDO A "T"	RACCORD EVACUATION EAU	WASSERABFLUSSANSCHLUSSE
13	**660211 01**	PLASTIC RING NUT	GHIERA	COLLIER DE SERRAGE EN PLAST.	PLASTIKRING MUTTER
14	**610148 20**	STORAGE BIN DRAIN	TUBO SCARICO CONTENITORE	TUYAU VIDANGE TROP PLAIN	BEHAL TER ABLAUF
15	**610204 00**	OVERFLOW DRAIN PIPE	TUBO SCARICO TROPPO PIENO	TUYAU VIDANGE CHAMBRE	BEHÄLTER ABLAUF
16	**660219 01**	BIN DRAIN PIPE	TUBO SCARICO CONTENITORE	TUYAU VIDANGE CONTENEUR	BEHÄLTERAUSLAUFSCHLAUCH
17	**640134 00**	O RING	GUARNIZIONE	JOINT TORIQUE	SIMMER RING
18	**660211 01**	DRAIN FILTER	FILTRO SCARICO	FILTRE EVACUATION EAU	ABFLUSSFILTER

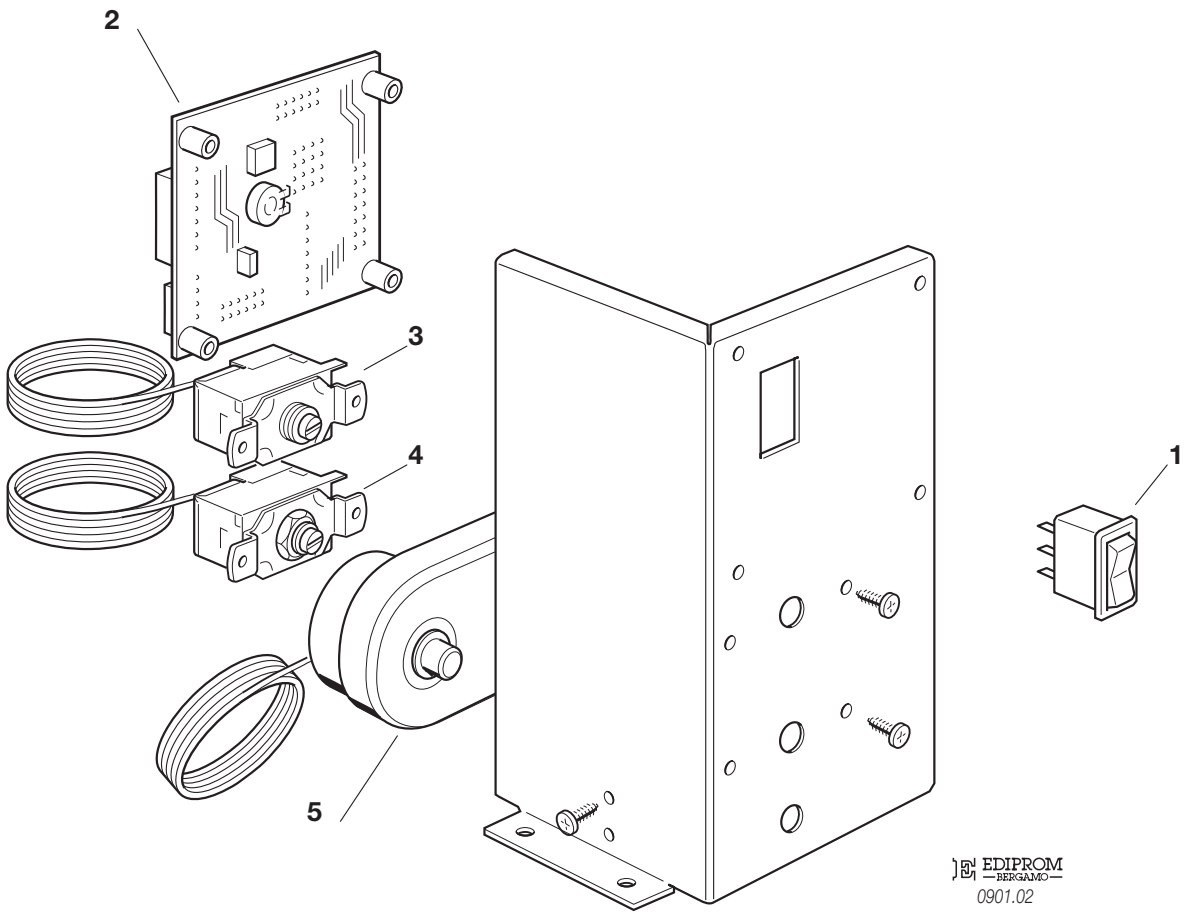

EDIPROM
BERGAMO
0901.02

SDE 50-64 - CONTROL BOX - SCATOLA DI CONTROLLO - BOITE ELECTRIQUE - SCHALTSCHRANK -

ITEM NO POS. NO REP. NO REF. NO	PART NO CODICE REFERENCE STUECK NR	DESCRIPTION	DESCRIZIONE	DESIGNATION	BESCHREIBUNG
1	620453 00	SWITCH	INTERRUTTORE LUMINOSO	INTERRUPTEUR LUMINEUX	SCHALTER
2	620507 00	ELECTRONIC TIMER	TIMER ELETTRONICO	MINUTERIE ELECTRONIQUE	ELEKTRONISCHER TIMER
3	630005 00	BIN THERMOSTAT	TERMOSTATO CONTENITORE	THERMOSTAT CONTENEUR	BEHÄLTER THERMOSTAT
4	620201 01	EVAPORATOR THERMOSTAT	TERMOSTATO EVAPORATORE	THERMOSTAT EVAPORATEUR	VERDAMPFERTHERMOSTAT
5	620443 02	THERMOSTAT - SAFETY	TERMOSTATO DI SICUREZZA	THERMOSTAT DE SECURITÉ	SICHERHEITS THERMOSTAT



Via Pascoli, 22 - 20010 Pogliano Milanese (Milano) Italy
Tel. +39 02 93900215 (Commerciale - Sales Dept.)
Tel. +39 02 93960357 (Assistenza - Service Dept.)
Fax +39 02 93900226 (Commerciale - Sales Dept.)
Fax +39 02 93960366 (Assistenza - Service Dept.)
E-mail: sales@simag.it • service@simag.it
www.simag.it