DESPIECE TECNICO / SPARE PARTS BOM

Lavadoras
Lava-linge
Washing machines
Waschmaschine
Lavatrici
Máquinas de lavar roupa

Modelos / Models:

LR-18 M
LA-18 M
LR-25 M
LA-25 M

Noviembre 2010 November
Revisado Septiembre 2015 September Revised

FAGOR

FAGOR INDUSTRIAL

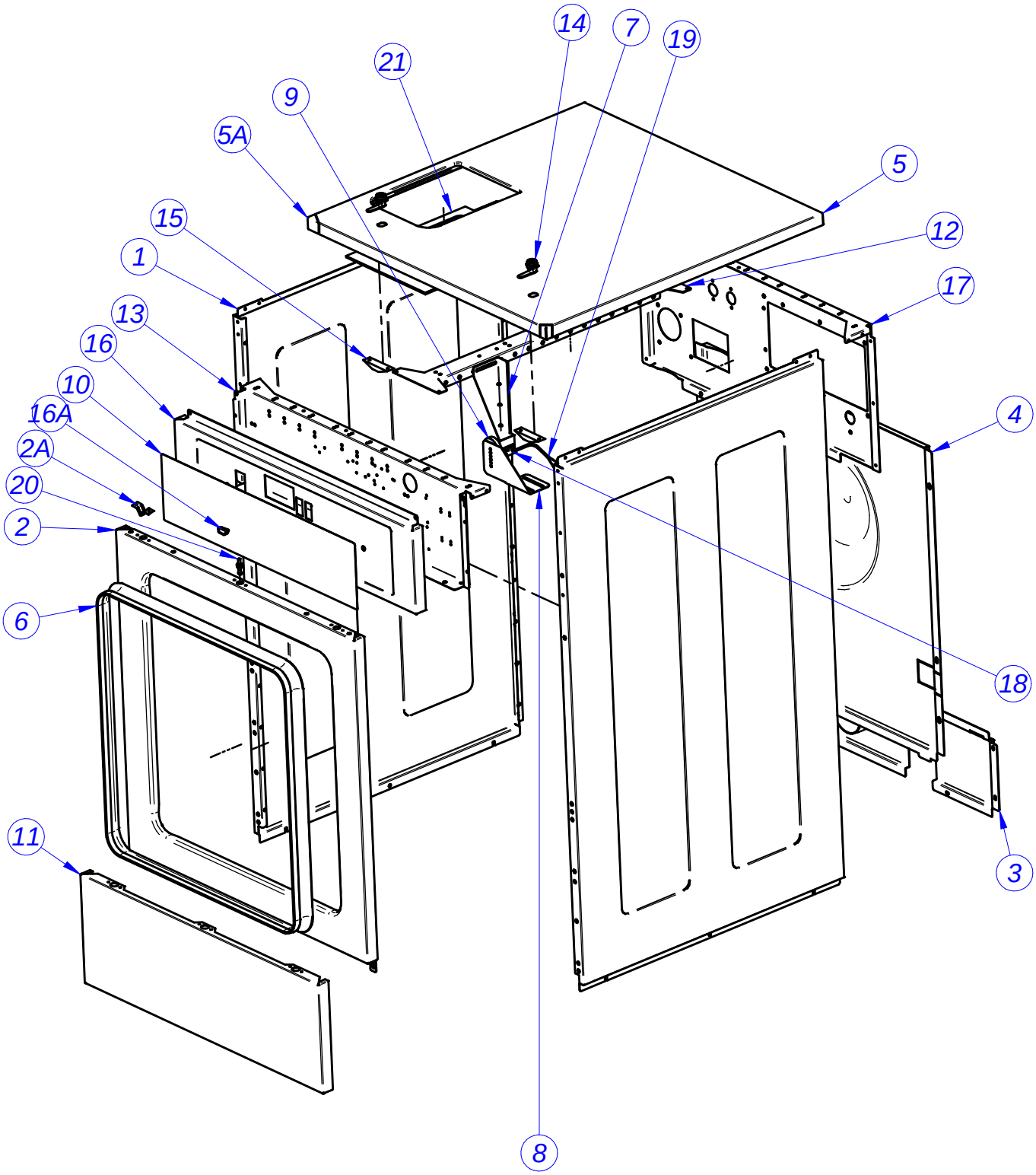

MUEBLE / CABINET LA/LR-18/25

MUEBLE / CABINET																ELIMINADO ELIMINATED	INTRODUCIDO INTRODUCED
ITEM	DENOMINACION	NAME	CODIGO	LR-18			LA-18			LR-25			LA-25				
				MP	M	MA	MP	M	MA	MP	M	MA	MP	M	MA		
1	PANEL LATERAL	SIDE PANEL	12110872	2	2	2											
			12110880				2	2	2								
			12110874							2	2	2					
			12110881										2	2	2		
2	PANEL FRONTAL	FRONT PANEL	12116090	1	1	1											25,07,14
			12116092				1	1	1	1	1	1					25,07,14
			12116097										1	1	1		25,07,14
2A	CIERRE MUELLE	LOCK SPRING	X010503000	6	6	6	6	6	6	6	6	6	6	6	6		
3	PANEL POSTERIOR DESAGUE	DRAINAGE REAR PANEL	P620306000	1	1	1										01,12,13	
			12044189	1	1	1											01,12,13
			P630307000				1	1	1							01,12,13	
			P644032000							1	1	1				01,12,13	
			12044192				1	1	1	1	1	1					01,12,13
			P640305000										1	1	1	01,12,13	
			12044190										1	1	1		01,12,13
4	PANEL POSTERIOR	REAR PANEL	P620382000	1	1	1											
			P630360000				1	1	1	1	1	1					
			P640337000										1	1	1		
5	ENCIMERA	WORKTOP	P634026000	1	1	1										12,03,12	
			12110888	1	1	1											12,03,12
			P630358000				1	1	1							12,03,12	
			12110891				1	1	1								12,03,12
			P644036000							1	1	1				12,03,12	
			12110890							1	1	1					12,03,12
			P640335000										1	1	1	12,03,12	
			12110889										1	1	1		12,03,12
5A	CANTONERA R1	R1 CORNER	12039188	2	2	2	2	2	2	2	2	2	2	2	2		
6	CORTINA (METROS)	CURTAIN (METRES)	P620324000	2,5	2,5	2,5	2,5	2,5	2,5	2,5	2,5	2,5	2,5	2,5	2,5		
7	PORTA SENSOR DESEQ.	IMBALANCE SENSOR HOLDER	P630315000				1	1	1				1	1	1		
8	SOPORTE IMAN DESEQ.	IMBALANCE MAGNET HOLDER	P627063000				1	1	1				1	1	1		
9	IMAN DESEQUILIBRIO	IMBALANCE MAGNET HOLDER	P620337000				1	1	1				1	1	1		
10	ADHESIVO	ADHESIVE	12007721	1			1			1			1				
			12007722		1			1			1			1			
			12007719			1			1			1			1		
10	ADHESIVO CP FAGOR MA	PC ADHESIVE FAGOR MA	12007741			1			1			1			1		18,03,14
11	ZOCALO	SKIRTING	12111769	1	1	1											25,07,14
			12116093				1	1	1	1	1	1					25,07,14
			12116098										1	1	1		25,07,14
	KIT ZOCALO 18	ZOCALO KIT 18	1300000197														
	KIT ZOCALO 25	ZOCALO KIT 25	1300000198														

MUEBLE / CABINET																	ELIMINADO ELIMINATED	INTRODUCIDO INTRODUCED
ITEM	DENOMINACION	NAME	CODIGO	LR-18			LA-18			LR-25			LA-25					
				MP	M	MA	MP	M	MA	MP	M	MA	MP	M	MA			
12	TRAVESAÑO CUBETERA	TRAY CROSS PIECE	P634025000	2	2	2							2	2	2			
			P630357000				2	2	2									
			P644037000							2	2	2						
13	CONTRAPORTAMANDOS	COUNTERCONTROL HOLDER	P620373000	1	1													
			P620381000			1												
			P630353000				1	1		1	1							
			P630359000						1			1						
			P640331000										1	1				
			P640336000												1			
14	CERRADURA	LOCK	P620351000	2	2		2	2		2	2		2	2				
			P620387000			2			2			2			2			
15	RAMPA CIERRE ENCIMERA	WORKTOP LOCK RAMP	P620379000	2	2	2	2	2	2	2	2	2	2	2	2			
16	PORTAMANDOS	CONTROL HOLDER	P620374000	1	1													
			P620380000			1												
			P630354000				1	1		1	1							
			P630355000						1			1						
			P640332000										1	1				
			P640333000												1			
16A	TAPON PUERTO SERIE PROG.	PORT PLUG	12023349	1			1			1			1					
17	SOPORTE ELECTROVALVULAS	SOLENOID VALVE SUPPORT	P620372000	1	1	1												
			P630356000				1	1	1	1	1	1						
			P640334000										1	1	1			
18	AMARRRE SENSOR DESEQUILIB.	IMBALANCE SENSOR FASTENIN.	Z203010000				1	1	1				1	1	1			
19	SENSOR DESEQUILIBRIO	SENSOR IMBALANCE	Z203009000				1	1	1				1	1	1			
20	PITON	PITON	X012612000	10	10	10	10	10	10	10	10	10	10	10	10			
21	JUNTA CUBETA	TRAY SEAL	P610360000	1	1	1	1	1	1	1	1	1	1	1	1			

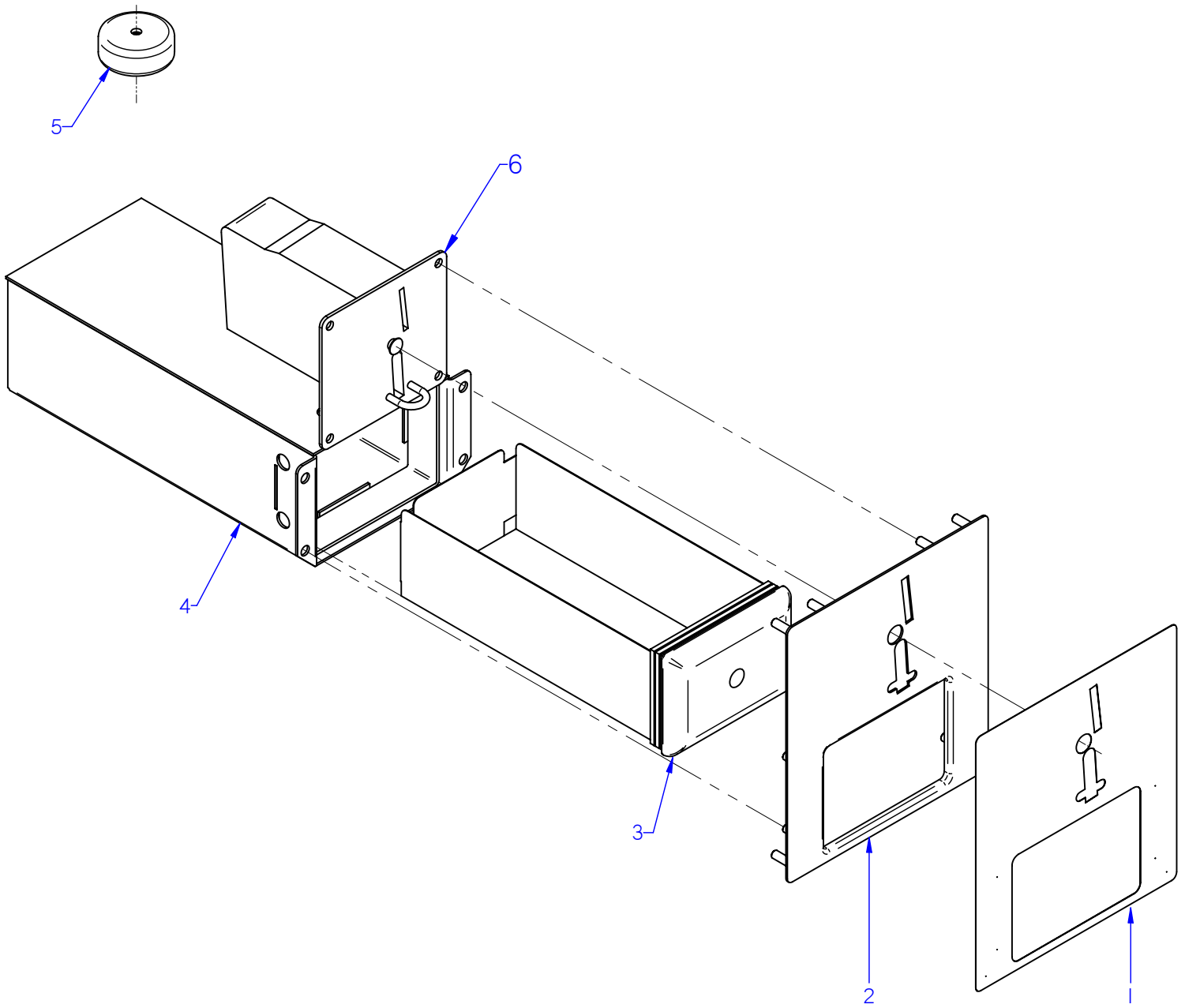

KIT MONEDERO

KIT MONEDERO / COIN SLOT KIT																	ELIMINADO ELIMINATED	INTRODUCIDO INTRODUCED
ITEM	DENOMINACION	NAME	CODIGO	LR-18			LA-18			LR-25			LA-25					
				MP	M	MA	MP	M	MA	MP	M	MA	MP	M	MA			
1	ADHESIVO MONEDERO FAGOR	COIN SLOT ADHESIVE FAGOR	12007739			1			1			1			1			
2	CHAPA MONEDERO COMPL.	COIN SLOT PLATE COMPL.	12003367			1			1			1			1			
S/Nº	TAPA MONEDERO COMPLETA FABR.	COIN SLOT PLATE TOP COMPL.	12095202			1			1			1			1			
3	CAJON MONEDAS	COIN DRAWER	P610407000			1			1			1			1			
4	PORTA CAJA MONEDAS COMPL.	COIN BOX HOLDER COMPL.	P614011000			1			1			1			1			
5	TRANSFORMADOR MONEDERO	COIN SLOT TRANSFORMER	P624014000			1			1			1			1			
6	MONEDERO WH (EUR-GBP)	COIN SLOT WH (EUR-GBP)	12023342			1			1			1			1			
6	MONEDERO WH (ARS-CLP-BRL)	COIN SLOT WH (ARS-CLP-BRL)	12044494			1			1			1			1			
6	MONEDERO WH (AUD-NZD-JPY)	COIN SLOT WH (AUD-NZD-JPY)	12044490			1			1			1			1			
6	MONEDERO WH (CNY-TWD-HKD)	COIN SLOT WH (CNY-TWD-HKD)	12044488			1			1			1			1			
6	MONEDERO WH (MAD-DZD-TND)	COIN SLOT WH (MAD-DZD-TND)	12044496			1			1			1			1			
6	MONEDERO WH (MYR-SGD-IDR)	COIN SLOT WH (MYR-SGD-IDR)	12044489			1			1			1			1			
6	MONEDERO WH (RUB-ROB-CZK)	COIN SLOT WH (RUB-ROB-CZK)	12044492			1			1			1			1			
6	MONEDERO WH (TRY-PLN)	COIN SLOT WH (TRY-PLN)	12044491			1			1			1			1			
6	MONEDERO WH (USD-MXN-CAD)	COIN SLOT WH (USD-MXN-CAD)	12044487			1			1			1			1			
6	MONEDERO WH (VEF-PEN-COP)	COIN SLOT WH (VEF-PEN-COP)	12044493			1			1			1			1			
	FAGOR KIT MONEDERO EUR-GBP	FAGOR KIT COIN EUR-GBP	19004589														**23,01,13**	
	FAGOR KIT MONEDERO EUR-GBP	FAGOR KIT COIN 2013 EUR-GBP	19012640	**A PARTIR DEL Nº DE SERIE 810006036**														**23,01,13**
	FAGOR KIT MONEDE. ARS-CLP-BRL	FAGOR KIT COIN ARS-CLP-BRL	19011106														**23,01,13**	
	FAGOR KIT MONEDE. ARS-CLP-BRL	FAGOR KIT COIN 2013 ARS-CLP-BRL	19012641	**A PARTIR DEL Nº DE SERIE 810006036**														**23,01,13**
	FAGOR KIT MONEDE. AUD-NZD-JPY	FAGOR KIT COIN AUD-NZD-JPY	19004592														**23,01,13**	
	FAGOR KIT MONEDE. AUD-NZD-JPY	FAGOR KIT COIN 2013 AUD-NZD-JPY	19012642	**A PARTIR DEL Nº DE SERIE 810006036**														**23,01,13**
	FAGOR KIT MONED. CNY-TWD-HKD	FAGOR KIT COIN CNY-TWD-HKD	19004591														**23,01,13**	
	FAGOR KIT MONED. CNY-TWD-HKD	FAG. KIT COIN 2013 CNY-TWD-HKD	19012643	**A PARTIR DEL Nº DE SERIE 810006036**														**23,01,13**
	FAGOR KIT MONED. MAD-DZD-TND	FAGOR KIT COIN MAD-DZD-TND	19011222														**23,01,13**	
	FAGOR KIT MONED. MAD-DZD-TND	FAGOR KIT COIN 2013 MAD-DZD-TND	19012644	**A PARTIR DEL Nº DE SERIE 810006036**														**23,01,13**
	FAGOR KIT MONED. MYR-SGD-IDR	FAGOR KIT COIN MYR-SGD-IDR	19011062														**23,01,13**	
	FAGOR KIT MONED. MYR-SGD-IDR	FAGOR KIT COIN 2013 MYR-SGD-IDR	19012645	**A PARTIR DEL Nº DE SERIE 810006036**														**23,01,13**
	FAGOR KIT MONED. RUB-ROB-CZK	FAGOR KIT COIN RUB-ROB-CZK	19011220														**23,01,13**	
	FAGOR KIT MONED. RUB-ROB-CZK	FAGOR KIT COIN 2013 RUB-ROB-CZK	19012646	**A PARTIR DEL Nº DE SERIE 810006036**														**23,01,13**
	FAGOR KIT MONEDERO TRY-PLN	FAGOR KIT COIN TRY-PLN	19011104														**23,01,13**	
	FAGOR KIT MONEDERO TRY-PLN	FAGOR KIT COIN 2013 TRY-PLN	19012647	**A PARTIR DEL Nº DE SERIE 810006036**														**23,01,13**
	FAGOR KIT MONED. USD-MXN-CAD	FAGOR KIT COIN USD-MXN-CAD	19004590														**23,01,13**	
	FAGOR KIT MONED. USD-MXN-CAD	FAGOR KIT COIN 2013 USD-MXN-CAD	19012648	**A PARTIR DEL Nº DE SERIE 810006036**														**23,01,13**
	FAGOR KIT MONED. VEF-PEN-COP	FAGOR KIT COIN VEF-PEN-COP	19011221														**23,01,13**	
	FAGOR KIT MONED. VEF-PEN-COP	FAG. KIT COIN 2013 VEF-PEN-COP	19012649	**A PARTIR DEL Nº DE SERIE 810006036**														**23,01,13**

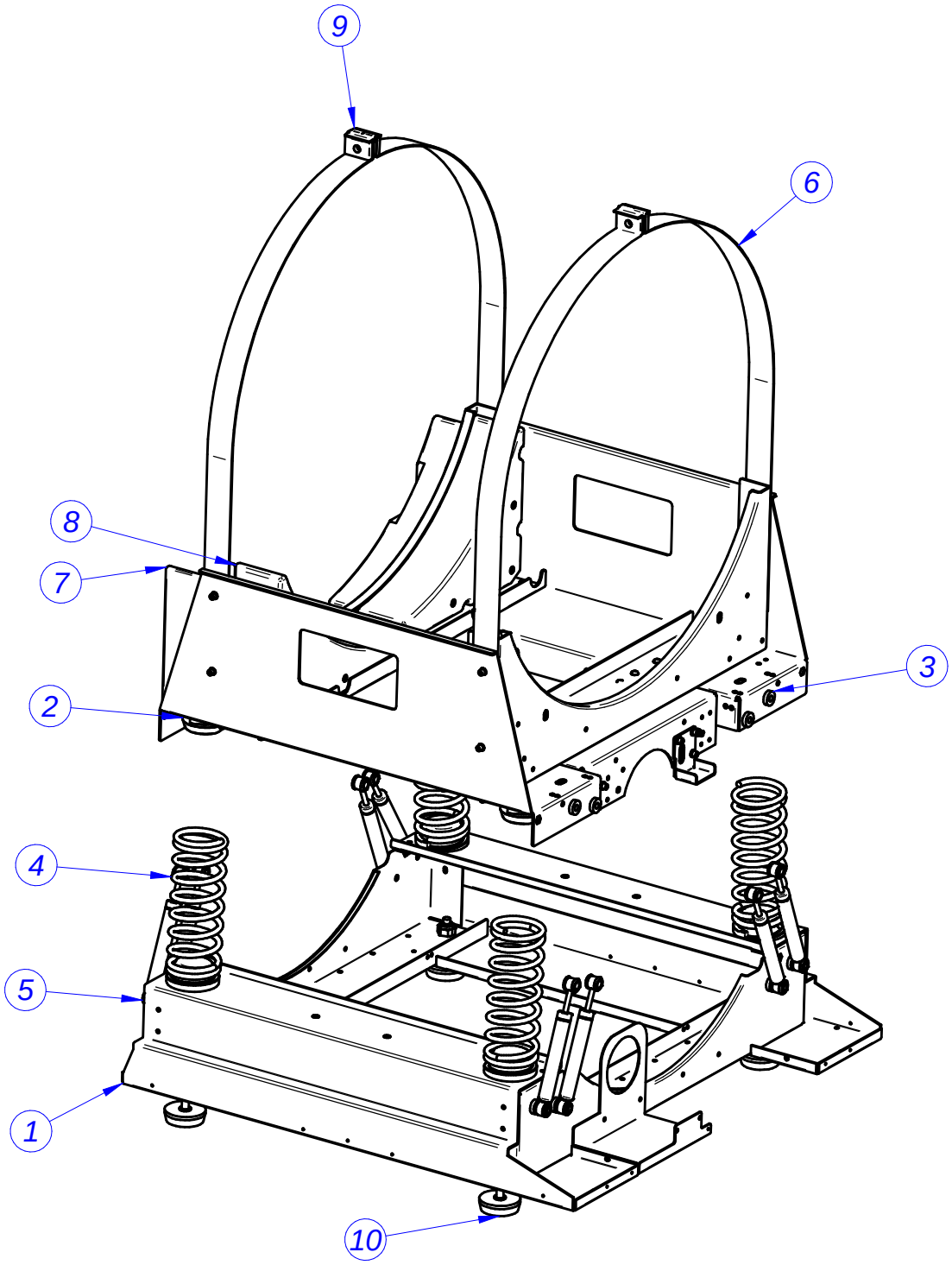

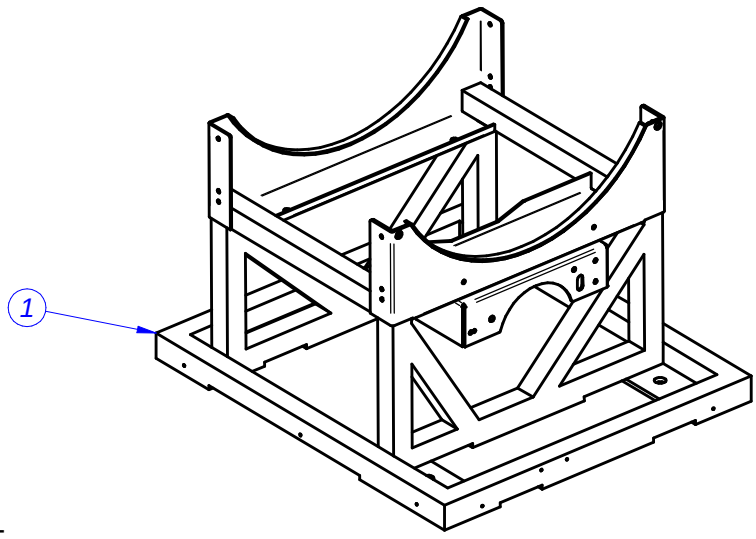

CUNA - ARMAZON / CRADLE - FRAME

CUNA - ARMAZON / CRADLE - FRAME																			
ITEM	DENOMINACION	NAME	CODIGO	LR-18			LA-18			LR-25			LA-25			ELIMINADO ELIMINATED	INTRODUCIDO INTRODUCED
				MP	M	MA	MP	M	MA	MP	M	MA	MP	M	MA		
1	ARMAZON	FRAME	P634001000	1	1	1										02,05,11	
			P634031000	1	1	1											02,05,11
			12104116				1	1	1								
			P644001000							1	1	1				02,05,11	
			P644042000							1	1	1					02,05,11
			P640101000										1	1	1		
2	BASE MUELLE	SPRING BASE	P620106000				8	8	8							15.07.13	
			12023345				8	8	8				8	8	8		15.07.13
3	CASQUILLO AMORTIGUADOR	DAMPER BUSHING	P620107000				16	16	16				16	16	16		
4	MUELLE	SPRING	P630106000				4	4	4								
			P640108000										4	4	4		
5	AMORTIGUADOR	DAMPER	P620115000				8	8	8								
			P630111000										8	8	8		
6	CUNA	CRADLE	P630207000				1	1	1								
			P640201000										1	1	1		
7	CONTRAPESO ANTERIOR	FRONT COUNTERWEIGHT	P630212000				2	2	2								
			P640205000										2	2	2		
8	CONTRAPESO POSTERIOR	REAR COUNTERWEIGHT	P630208000				2	2	2								
			P640208000										2	2	2		
9	AMARRE ABRAZADERA	CLAMP FASTENING	P640215000	4	4	4	4	4	4	4	4	4	4	4	4		
10	PATA	LEG	P626521000				4	4	4				4	4	4		

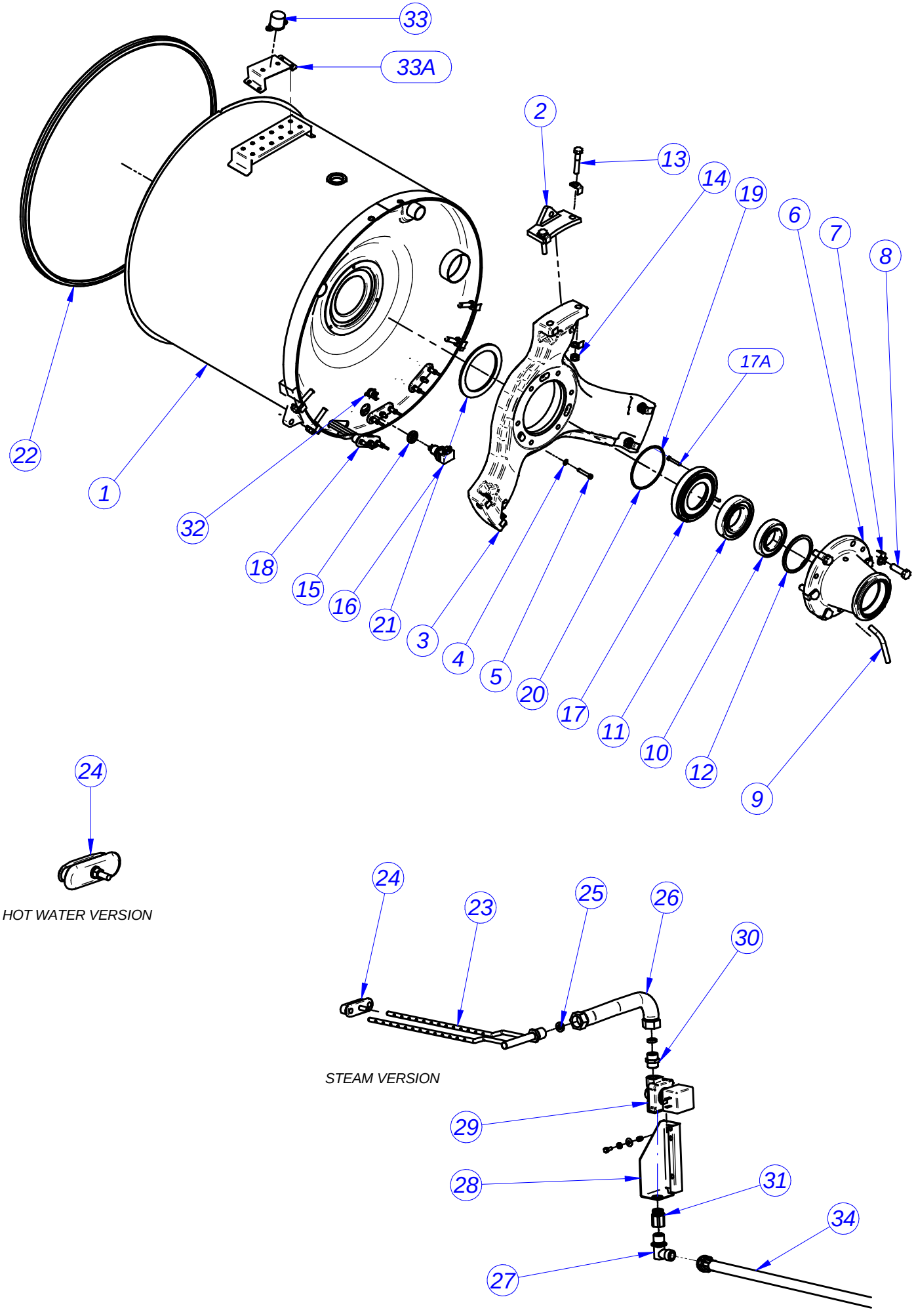
33
33A
2
13
14
19
6
7
8
17A
22
1
32
18
15
16
21
3
4
5
20
17
11
10
12
9
24
HOT WATER VERSION
24
23
25
26
30
STEAM VERSION
29
28
31
34
27

CUBA / TUB

CUBA / TUB																		
ITEM	DENOMINACION	NAME	CODIGO	LR-18			LA-18			LR-25			LA-25			ELIMINADO ELIMINATED	INTRODUCIDO INTRODUCED
				E	AC	V	E	AC	V	E	AC	V	E	AC	V		
1	CUBA	TUB	P634012000	1	1	1										01,12,10	
			P634029000	1	1	1										01,12,13	01,12,10
			12004061	1	1	1											01,12,13
			P636107000				1	1	1							01,12,13	
			12004046				1	1	1								01,12,13
			12004084							1	1	1				01,12,10	
			12004085							1	1	1					01,12,10
			P646105000										1	1	1	01,12,13	
			12004067										1	1	1		01,12,13
2	APOYO TORNILLOS	SCREW SUPPORT	P626014000	1	1	1											
			P636009000				1	1	1	1	1	1					
			P646012000										1	1	1		
3	REFUERZO FONDO CUBA	TUB BASE REINFORCEMENT	P626001000	1	1	1											
			P636001000				1	1	1	1	1	1					
			P646014000										1	1	1		
4	ARANDELA	WASHER	Q232040000	3	3	3	3	3	3	3	3	3	5	5	5		
5	TORN. INTERIOR REFUERZO	HEXAGONAL INTERIOR REINFOR	Q122045000	3	3	3	3	3	3	3	3	3	5	5	5		
6	SOPORTE RODAMIENTOS	BEARING SUPPORT	P626002000	1	1	1										15,10,13	
			12095451	1	1	1											15,10,13
			P636002000				1	1	1	1	1	1				15,10,13	
			12095452				1	1	1	1	1	1					15,10,13
			P646015000										1	1	1	15,10,13	
			12095453										1	1	1		15,10,13
9	TUBO EVACUACION	DRAINAGE PIPE	P626015000	1	1	1	1	1	1	1	1	1	1	1	1		
10	RODAMIENTO EXTERIOR	OUTER BEARING	P626008000	1	1	1											
			P626009000				1	1	1	1	1	1					
			P644904000										1	1	1		
11	RODAMIENTO INTERIOR	INNER BEARING	P626009000	1	1	1											
			P636008000				1	1	1	1	1	1					
			P644903000										2	2	2		
12	ANILLO SEGURIDAD	CIRCLIP	Q301030000	1	1	1											
			Q301036000				1	1	1	1	1	1					
			Q301045000										1	1	1		
13	TORN. REFUERZO CUBA	TUB REINFORCEMENT SCREW	Q151530000	6	6	6											
			Q151535000				6	6	6	6	6	6					
			Q151590000										10	10	10		
14	TUERCA REFUERZO CUBA	TUB REINFORCEMENT NUT	Q221338000	6	6	6	6	6	6	6	6	6					
			Q221347000										10	10	10		
15	SOP.TERMOSTATO 1001713	THERMOSTAT SUPPORT 1001713	N503017000	1	1	1	1	1	1	1	1	1	1	1	1		

CUBA / TUB																	
ITEM	DENOMINACION	NAME	CODIGO	LR-18			LA-18			LR-25			LA-25			ELIMINADO ELIMINATED	INTRODUCIDO INTRODUCED
				E	AC	V	E	AC	V	E	AC	V	E	AC	V		
16	SONDA TEMPERATURA	TEMPERATURE PROBE	P503025000	1	1	1	1	1	1	1	1	1	1	1	1		
17	CASQUILLO CONTRARETEN	COUNTESEAL BUSHING	P626003000	1	1	1											
			P636003000				1	1	1	1	1	1					
			P646003000										1	1	1		
17A	TORNILLO INOX M5X30MM DIN912	S. STEEL BOLT M5X30 DIN912	12010170	3	3	3	3	3	3	3	3	3	3	3	3		
18	RESISTENCIA CALENTAMIENTO	HEATING RESISTOR	12023242	3			3	1								01.07.14	
			12096051	3			3	1									01.07.14
			P533001000							3			3			*** 31,01,12**	
			12041359							3			3				*** 31,01,12**
			12024816											3		01.07.14	
			12096226											3			01.07.14
19	TORN. CASQ. CONTRARETEN	COUNTERSEAL BUSHING SCREW	Q122034000	3	3	3	3	3	3	3	3	3	3	3	3		
20	JUNTA TÓRICA	O-RING	Q307075000	1	1	1											
			Q307077000				1	1	1	1	1	1					
			Q307083000										1	1	1		
21	JUNTA CASQ. CONTRARETEN	COUNTERSEAL BUSHING SCREW	P616013000	1	1	1											
			P636011000				1	1	1	1	1	1					
			P646017000										1	1	1		
22	JUNTA CUBA	TUB SEAL	P626110000	1	1	1											
			P636108000				1	1	1	1	1	1					
			P646110000										1	1	1		
23	INYECTOR VAPOR 10,13,18	STEAM JET 10,13,18	P615001000			1			1			1					
			P645002000												1		
24	CIERRE INYECTOR	INJECTOR LOCK	P445011000			1			1			1			1		
24	CIERRE INYECTOR / RESIST.	INJECTOR AND HEATING CAP	12024539		3	2		2	2		3	2		2	2		
25	ARANDELA VAPOR 10, 13, 18	STEAM WASHER 10, 13, 18	P615002000			2			2								
			P535024000									2			2		
26	MANGUERA VAPOR	STEAM HOSE	P525005000			1			1								
			P545011000									1			1		
27	CODO	L-BEND	S115013000			1			1			1					
			Z718421000												1		
28	SOPORTE VALVULA	VALVE SUPPORT	P620327000			1			1			1					
			P645001000												1		
29	VALVULA VAPOR	STEAM VALVE	P615003000			1			1								
			P535023000									1			1		
30	RACOR M-M	M-M CONNECTION	S205023000			1			1								
			Z102301000									1			1		
31	RACOR H-M	H-M CONNECTION	X162101000			1			1			1					
*** EL CAMBIO SE REALIZARA A PARTIR DEL Nº DE SERIE 810002217**			*** THIS CHANGE WILL BE DONE FROM SERIAL NUMBER 810002217**														

CUBA / TUB																ELIMINADO ELIMINATED	INTRODUCIDO INTRODUCED
ITEM	DENOMINACION	NAME	CODIGO	LR-18			LA-18			LR-25			LA-25				
				E	AC	V	E	AC	V	E	AC	V	E	AC	V		
32	TERMOSTATO SEG. 115ºC UL	SAFETY THERMOSTAT 115ºC UL	12047401	1	1	1	1	1	1	1	1	1	1	1	1	18.05.15	01.12.13
S/Nº	PASAMUROS BULBO	BUSHING BULB	12023546	1	1	1	1	1	1	1	1	1	1	1	1	18.05.15	01.12.13
S/Nº	SOPORTE TERMOSTATO SEG.	SAFETY THERMOSTAT SUPP.	12007537	1	1	1	1	1	1	1	1	1	1	1	1	18.05.15	01.12.13
32	LIMITADOR DE SEGURIDAD	SAFETY THERMOSTAT	12096597	1	1	1	1	1	1	1	1	1	1	1	1	SINCE 8100465840	
34	MANGUERA VAPOR	STEAM HOSE	12024330			1			1			1			1		

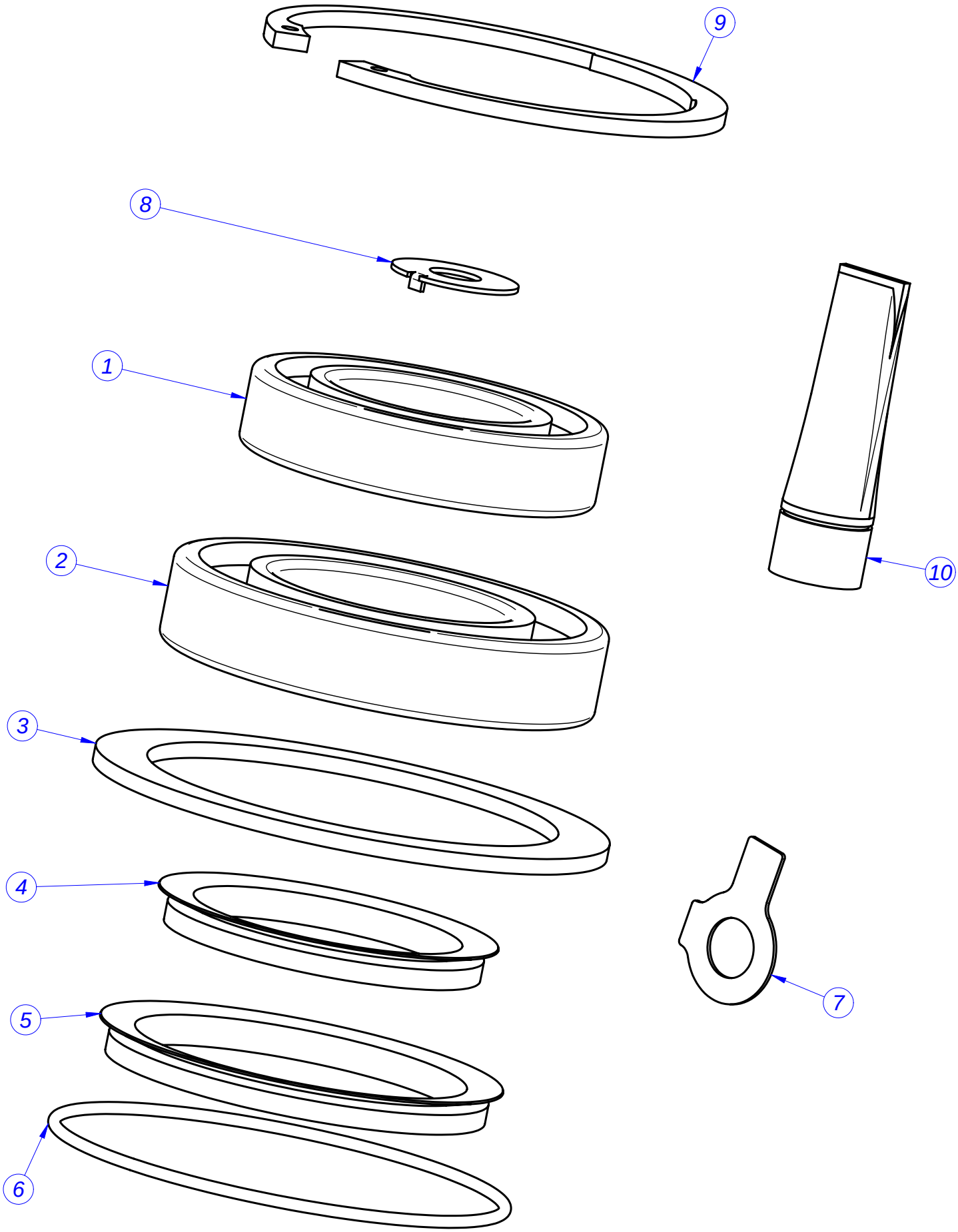
9
8
1
10
2
3
4
7
5
6

KIT RODAMIENTOS / BEARING KIT								ELIMINADO ELIMINATED	INTRODUCIDO INTRODUCED
ITEM	DENOMINACION	NAME	CODIGO	LR-18	LA-18	LR-25	LA-25		
	KIT RODAMIENTOS 13	**BEARING KIT 13**	**1300000084**	**1**					
	KIT RODAMIENTOS 18	**BEARING KIT 18**	**1300000085**		**1**	**1**			
	KIT RODAMIENTOS 25	**BEARING KIT 25**	**1300000164**				**1**		
1	RODAMIENTO EXTERIOR	OUTER BEARING	P626008000	1					
			P626009000		1	1			
			P644904000				1		
2	RODAMIENTO INTERIOR	INNER BEARING	P626009000	1					
			P636008000		1	1			
			P644903000				2		
3	JUNTA CASQ. CONTRARETEN	COUNTERSEAL BUSHING SCREW	P616013000	1					
			P636011000		1	1			
			P646017000				1		
4	RETEN V-RING 1	V-RING 1 RETAINER 1	P624914000	1					
			P634912000		1	1			
			P644916000				1		
5	RETEN V-RING 2	V-RING RETAINER 2	P624913000	1					
			P634911000		1	1			
			P644915000				1		
6	JUNTA TÓRICA	O-RING	Q307075000	1					
			Q307077000		1	1			
			Q307083000				1		
7	ARANDELA SEGURIDAD	SAFETY WASHER	Q271302000	6					
			Q271306000	12	18	18			
			Q271304000				30		
8	ARANDELA SEG. POLEA	SAFETY WASHER PULLEY	Q301329000	1	1	1	1		
9	ANILLO SEGURIDAD	CIRCLIP	Q301030000	1					
			Q301036000		1	1			
			Q301045000				1		
10	GRASA RETENES	GREASE SEALS	P536544000	1	1	1	1		

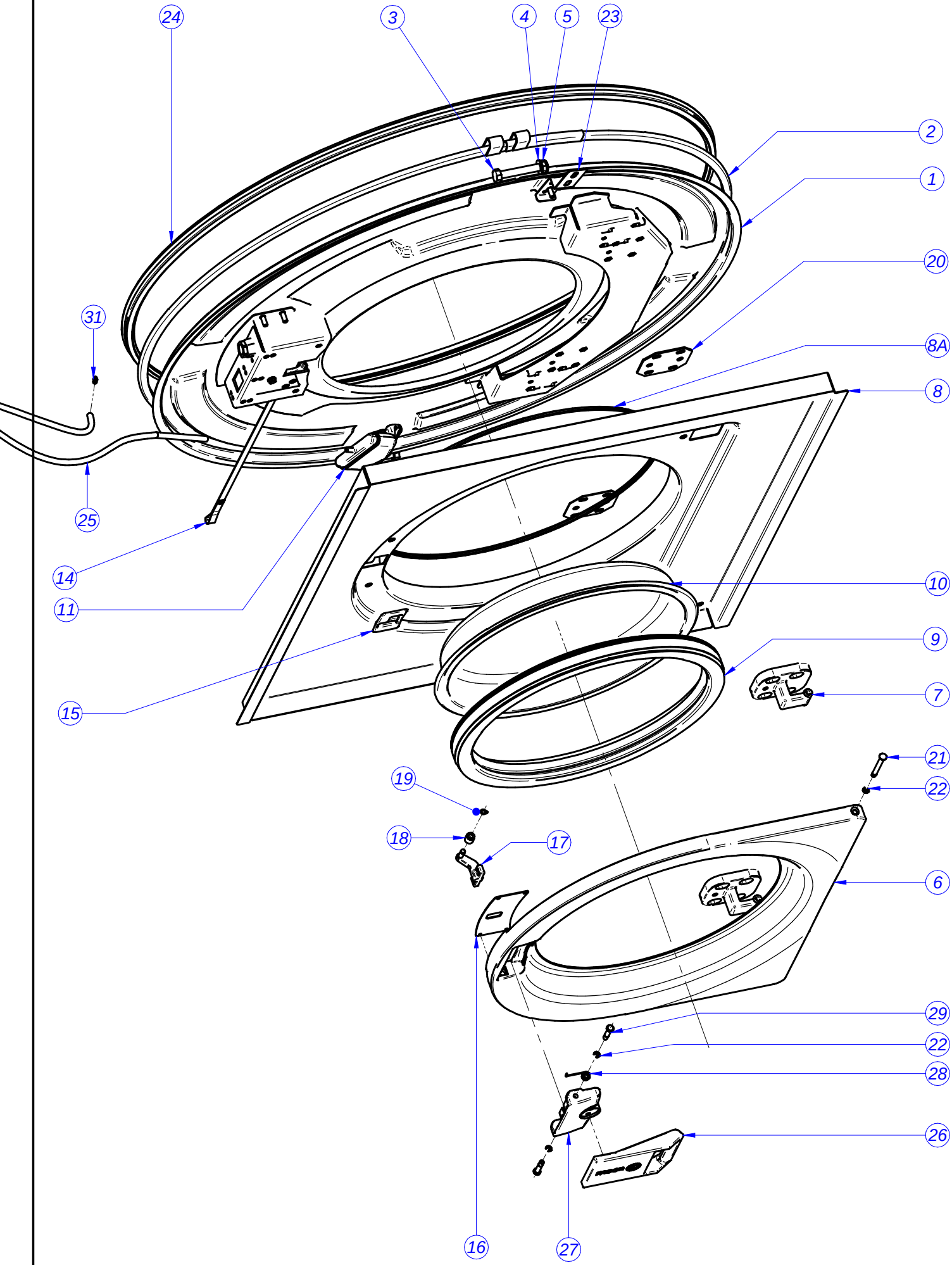
24
3
4
5
23
2
1
20
31
8A
8
25
14
11
10
9
15
7
21
19
22
18
17
6
29
22
28
26
16
27

FRENTE CUBA / TUB FRONT								ELIMINADO ELIMINATED	INTRODUCIDO INTRODUCED
ITEM	DENOMINACION	NAME	CODIGO	LR-18	LA-18	LR-25	LA-25		
1	FRENTE CUBA COMPLETO	COMPLETE TUB FRONT	12044429	1					
			12103825		1	1			
			12110579				1		
2	CIERRE CUBA	TUB LOCK	P626118000	1					
			P636112000		1	1			
			P646107000				2		
3	TORNILLO CIERRE CUBA	TUB LOCK SCREW	Q011369000	1	1	1	2		
4	ARAND. CIERRE	GROWER LOCK	Q232060000	2	2	2	4		
5	TUERCA CIERRE CUBA	TUB LOCK NUT	Q221306000	1	1	1	2		
6	PUERTA CON MANETA	DOOR WITH LEVER	P620532000	1	1	1	1		
7	BISAGRA PUERTA	DOOR HINGE	P620502000	2	2	2	2		
8	FONDO PUERTA	DOOR BASE	P620501000	1	1	1	1		
8A	PERFIL GOMA GRIS EN U 12*6	GREY RUBBER PROFILE U12*6	11000068	1	1	1	1		
9	JUNTA PUERTA	DOOR SEAL	P620528000	1	1	1	1		
10	MIRILLA PUERTA	DOOR WINDOW	P530503000	1	1	1	1		
11	CAMARA PRESOSTATO	PRESSURE SWITCH	P445002000	1	1	1	1	20,07,15	
11	CAMPANA TANQUE	TUB'S PRESSURE CHAMBER	12093146	1	1	1	1		20,07,15
12	CONDUCTO UNION	PIPE UNION	P502106000	1	1	1	1	20,07,15	
13	ABRAZADERA	CLAMP	Q881306000	2	2	2	2	20,07,15	
14	CIERRE COMPLETO	COMPLETE LOCK	12127838	1	1	1	1		
15	EMBELLECEDOR CIERRE	LOCK TRIM	P620515000	1	1	1	1	10,02,14	
15	EMBELLECEDOR CIERRE	LOCK TRIM	12096278	1	1	1	1		10,02,14
16	TAPA CIERRE	LID CLOSURE	P627816000	1	1	1	1		
17	GANCHO CIERRE	LOCK HOOK	P620505000	1	1	1	1		
18	CASQUILLO	BUSHING	P610506000	1	1	1	1		
19	ANILLO SEGURIDAD	CIRCLIP	Q302061000	1	1	1	1		
20	CALZO BISAGRA	HINGE WEDGE	P620521000	4	4	4	4		
21	PASADOR PUERTA	DOOR PIN	P620514000	2	2	2	2		
22	ARANDELA SEGURIDAD 4	SAFETY WASHER 4	Q272020000	2	2	2	2		
23	SOPORTE CONDUCTO	PIPE SUPPORT	P626128000	1	1	1	1		
24	JUNTA CUBA	TUB SEAL	P626110000	1					
			P636108000		1	1			
			P646110000				1		
25	TUBO GOMA NEGRO Ø 8*4	BLACK RUBBER HOSE Ø 8*4	3702400000	1	1	1	1		

FRENTE CUBA / TUB FRONT								ELIMINADO ELIMINATED	INTRODUCIDO INTRODUCED
ITEM	DENOMINACION	NAME	CODIGO	LR-18	LA-18	LR-25	LA-25		
26	POMO FAGOR 2010	KNOB FAGOR 2010	12000752	1	1	1	1		
27	MANETA PUERTA FAGOR	DOOR HANDLE FAGOR	12010370	1	1	1	1		
28	MUELLE CIERRE	SPRING LOCK	12023383	1	1	1	1		
29	PASADOR CIERRE	LOCKING PIN	12016778	2	2	2	2		
31	REDUCCION PRESOSTATO	PRESSURE SWITCH REDUCTION	12025248	1	1	1	1		

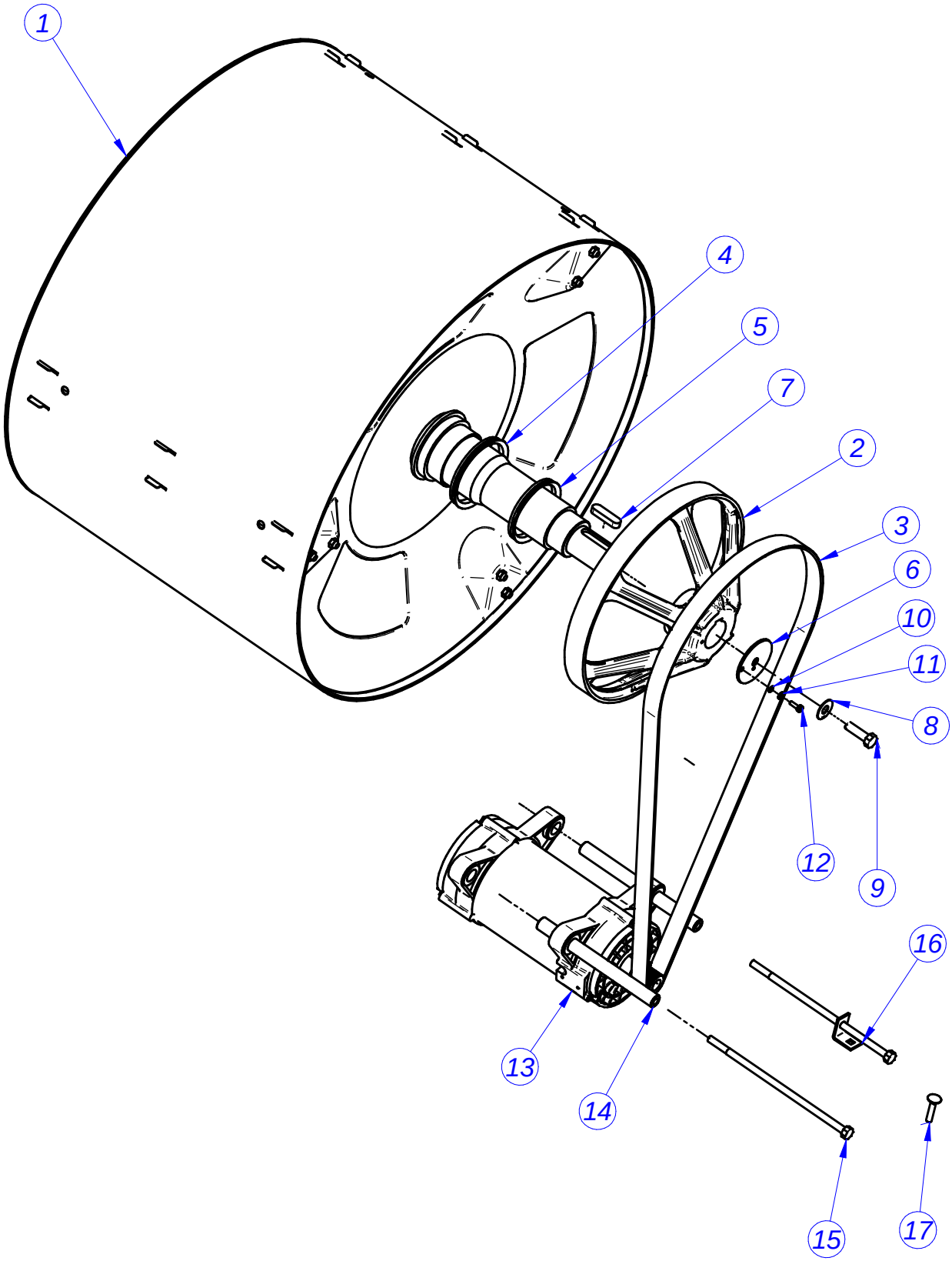

TAMBOR / DRUM

TAMBOR / DRUM																		
ITEM	DENOMINACION	NAME	CODIGO	LR-18			LA-18			LR-25			LA-25			ELIMINADO ELIMINATED	INTRODUCIDO INTRODUCED
				MP	M	MA	MP	M	MA	MP	M	MA	MP	M	MA		
1	TAMBOR COMPLETO	COMPLETE DRUM	P634010000	1	1	1											
			P634910000				1	1	1								
			P644010000							1	1	1					
			P644912000										1	1	1		
2	POLEA	PULLEY	P626006000	1	1	1	1	1	1	1	1	1					
			P646013000										1	1	1		
3	CORREA	BELT	P635902000	1	1	1										02,05,11	
			P625903000	1	1	1											02,05,11
			P635902000				1	1	1								
			P635908000							1	1	1					
			P645905000										1	1	1		
4	RETEN V-RING 1	V-RING RETAINER 1	P624914000	1	1	1											
			P634912000				1	1	1	1	1	1					
			P644916000										1	1	1		
5	RETEN V-RING 2	V-RING RETAINER 2	P624913000	1	1	1											
			P634911000				1	1	1	1	1	1					
			P644915000										1	1	1		
6	ARANDELA POLEA	PULLEY WASHER	12021832	1	1	1	1	1	1	1	1	1	1	1	1		
7	CHAVETA	COTTER PIN	P626010000	1	1	1	1	1	1	1	1	1	1	1	1		
8	ARANDELA SEGURIDAD	SAFETY WASHER	Q301329000	1	1	1	1	1	1	1	1	1	1	1	1		
9	TORNILLO POLEA	PULLEY SCREW	Q011376000	1	1	1	1	1	1	1	1	1	1	1	1		
10	ARANDELA A5	WASHER A5	Q232030000	1	1	1	1	1	1	1	1	1	1	1	1		
11	ARAND.ABAN. A5 A.304	FAN WASHER A5 A.304	Q242030000	1	1	1	1	1	1	1	1	1	1	1	1		
12	TORN.EXA. M5X15 A.304	HEX BOLT M5X15 A.304	Q012032000	1	1	1	1	1	1	1	1	1	1	1	1		
13	MOTOR	ENGINE	P635906000	1	1	1	1	1	1								
			P645902000							1	1	1	1	1	1		
14	TUBO SOPORTE MOTOR	MOTOR SUPPORT HOSE	P635907000	2	2	2	2	2	2								
			P645903000							2	2	2	2	2	2		
15	TORNILLO MOTOR	MOTOR SCREW	Q151527000	2	2	2	2	2	2								
			Q151591000							2	2	2	2	2	2		
16	TENSOR MOTOR	MOTOR TENSOR	P620214000	1	1	1	1	1	1	1	1	1	1	1	1		
17	TORNILLO TENSOR	TENSOR SCREW	Q151393000	1	1	1	1	1	1	1	1	1	1	1	1		
19	CASQUILLO EJE	AXIS BUSHING	12023262	1	1	1											
19	CASQUILLO EJE	AXIS BUSHING	12023256				1	1	1	1	1	1					
19	CASQUILLO EJE	AXIS BUSHING	12007749										1	1	1		

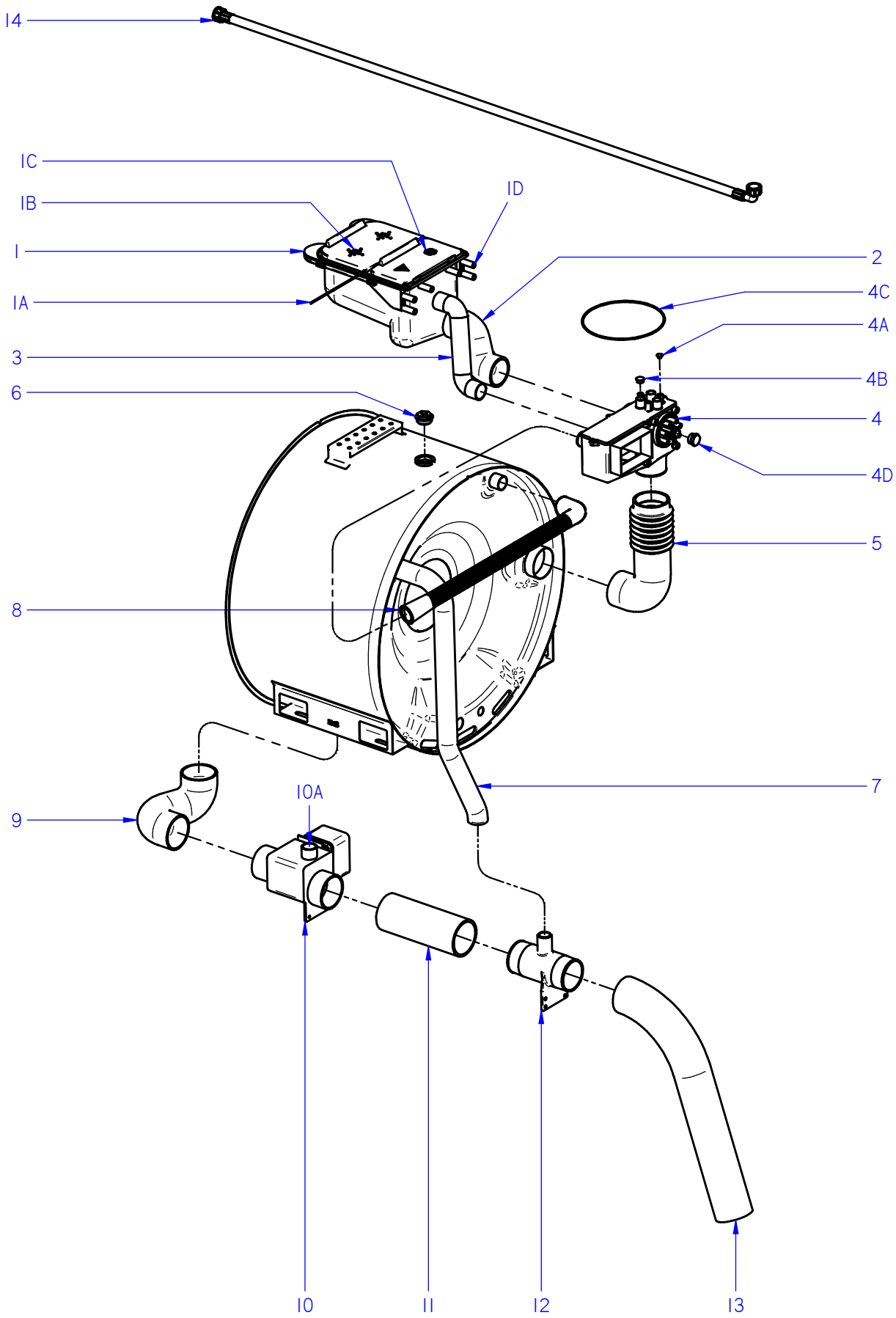

CUBETERA / TRAY
LA/LR-18-25

CUBETERA / TRAY																		
ITEM	DENOMINACION	NAME	CODIGO	LR-18			LA-18			LR-25			LA-25			ELIMINADO ELIMINATED	INTRODUCIDO INTRODUCED
				MP	M	MA	MP	M	MA	MP	M	MA	MP	M	MA		
1	CUBETA DETERGENTES	DETERGENT TRAY	12007752	1	1	1	1	1	1	1	1	1	1	1	1		
1A	EJE TAPAS CUBETA	TRAY COVERS AXIS	12010483	1	1	1	1	1	1	1	1	1	1	1	1		
1B	TAPA 1	COVER 1	12010403	1	1	1	1	1	1	1	1	1	1	1	1		
1C	TAPA 2	COVER 2	12000747	1	1	1	1	1	1	1	1	1	1	1	1		
1D	TAPON CUBETA DETERGENTES	DETERGENT TRAY CAP	12010088	2	2	2	2	2	2	2	2	2	2	2	2		
2	CONDUCTO CUBETERA	TRAY PIPE	P634022000	1	1	1							1	1	1		
			P630705000				1	1	1								
			P644033000							1	1	1					
3	CONDUCTO REBOSADERO CUBETERA	TRAY OVERFLOW PIPE	P634023000	1	1	1							1	1	1		
			P630706000				1	1	1								
			P644034000							1	1	1					
4	CAJA COLECTOR	MANIFOLD BOX	P620723000	1	1	1	1	1	1	1	1	1	1	1	1		
4A	TAPON CAJA COLECTOR 8	COLLECTOR BOX PLUG 8	12010034		1	1		1	1		1	1		1	1		01.03.11
4B	TAPON CAJA COLECTOR 16	COLLECTOR BOX PLUG 16	12010013	3	3	3	3	3	3	3	3	3	3	3	3		01.03.11
4C	JUNTA TAPA COLECTOR	BOARD COVER COLLECTOR	P620728000	1	1	1	1	1	1	1	1	1	1	1	1		01.03.11
4D	CAPUCHON CON ROSCA SR1126	THREADED CAP SR1126	12121485	1	1	1	1	1	1	1	1	1	1	1	1		
5	CONDUCTO ENTRADA AGUA	WATER INPUT PIPE	12025016	1	1	1							1	1	1		
			12025017				1	1	1	1	1	1					
6	TAPON DESAGÜE	DRAINING CAP	12023875	1	1	1	1	1	1	1	1	1	1	1	1	03.08.15	
6	TAPON CUBA 1" G	TUB CAP 1" G	12128218	1	1	1	1	1	1	1	1	1	1	1	1		03.08.15
7	CONDUCTO REBOSADERO	OVERFLOW PIPE	P620704000	1	1	1											
			P630702000				1	1	1								
			P640703000							1	1	1	1	1	1		
8	SALIDA VAPOR	STEAM OUTPUT	12007821	1	1	1	1	1	1	1	1	1	1	1	1		
9	CONDUCTO DESAGÜE	DRAINAGE PIPE	P634021000	1	1	1											
			P630703000				1	1	1							01.12.13	
			12044165	1	1	1	1	1	1								01.12.13
			P532119000							1	1	1	1	1	1	01.12.13	
			12025016							1	1	1					01.12.13
			12025017										1	1	1		01.12.13
10	VALVULA	VALVE	P302120000	1	1	1	1	1	1							01.12.13	
			P532103000							1	1	1	1	1	1		
10	EV 230V AC 50/60Hz 1 VIA	EV 230V AC 50/60Hz 1 WAY	12024404	1	1	1	1	1	1	1	1	1	1	1	1		01.12.13
10A	TAPA VAULA DESAGUE	DRAINAGE VALVE COVER	12095938	1	1	1	1	1	1	1	1	1	1	1	1		01.12.13
11	CONDUCTO VAULA-SALIDA	OUTPUT VALVE PIPE	12046140	1	1	1				1	1	1					01.12.14
			12046139				1	1	1								01.12.13
			12046144										1	1	1		01.12.13
12	SALIDA DESAGUE 3"	DRAINAGE OUTPUT 3"	12046868	1	1	1	1	1	1	1	1	1	1	1	1		01.12.13
13	CONDUCTO CUBETERA LA-25	TRAY PIPE LA-25	12024890	1	1	1	1	1	1	1	1	1	1	1	1		01.12.13
14	MANGUERA ENTRADA AGUA	WATER INLET PIPE	12024115	3	2	2	3	2	2	3	3	3	3	3	3		

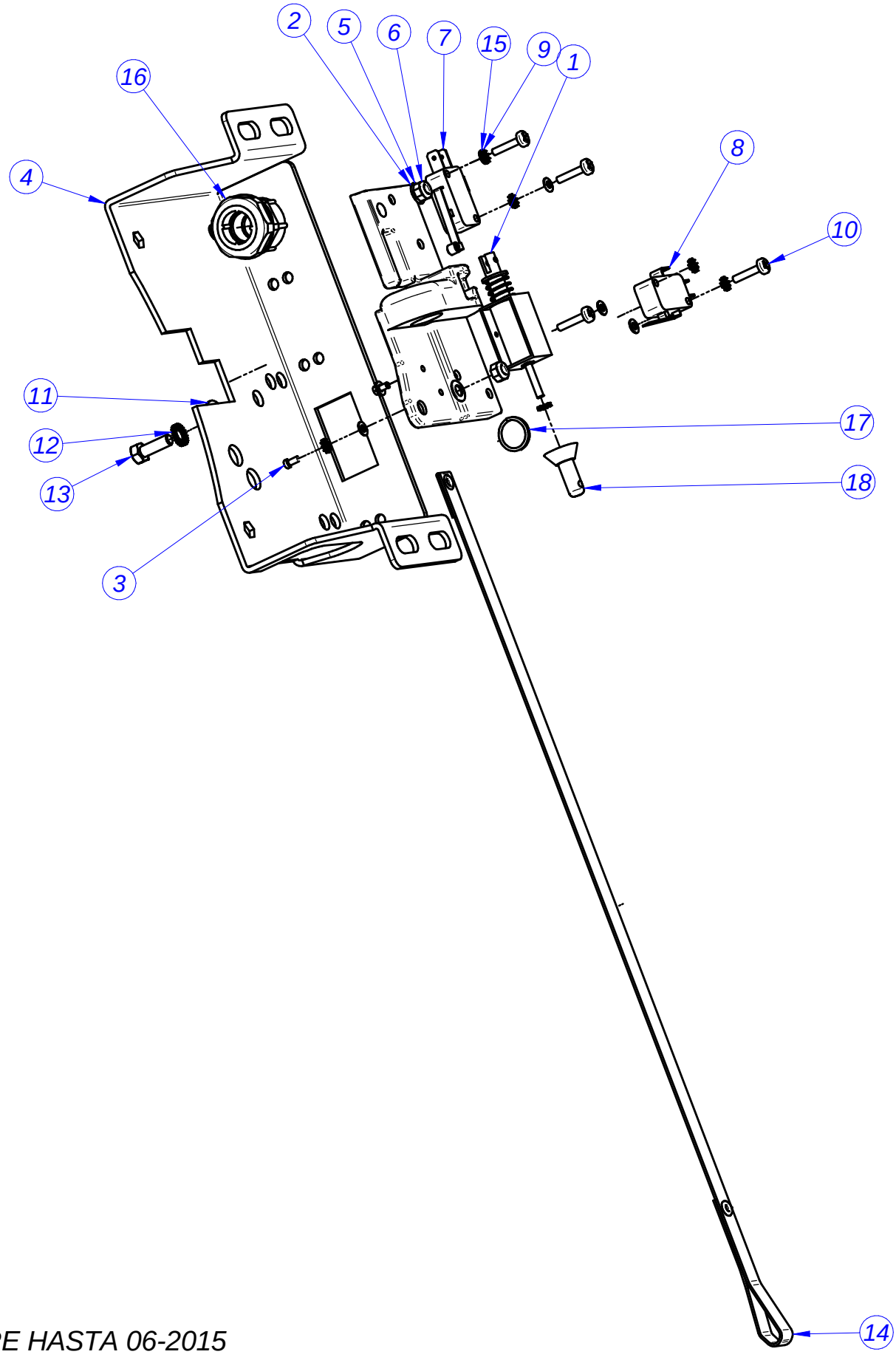

CIERRE HASTA 06-2015
LOCK UNTIL 06-2015

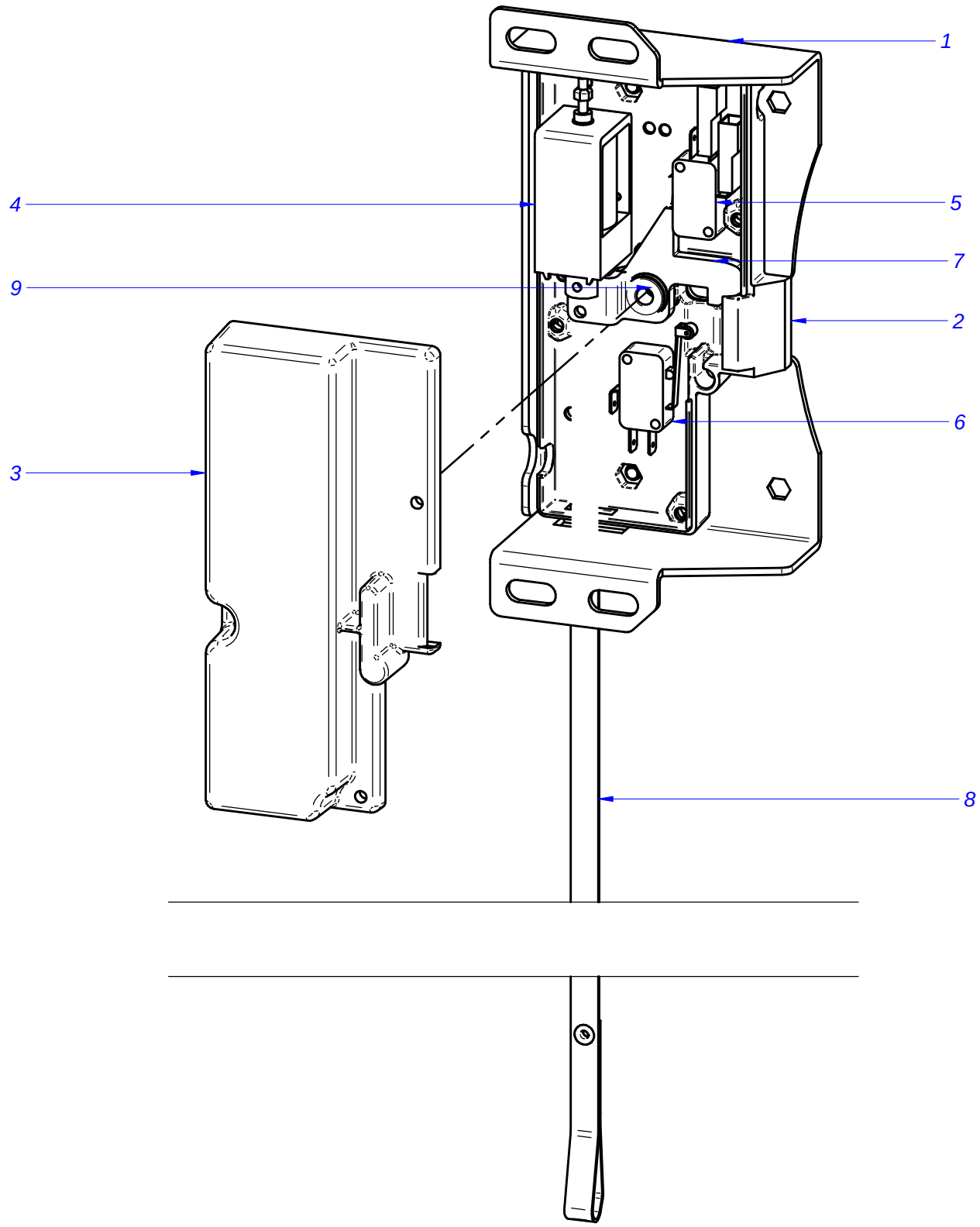

CIERRE DESDE Nº DE SERIE 8100493065 - 06-2015

LOCK SINCE SERIAL Nr. 8100493065 - 06-2015

CIERRE / LOCK								ELIMINADO ELIMINATED	INTRODUCIDO INTRODUCED
ITEM	DENOMINACION	NAME	CODIGO	LR-18	LA-18	LR-25	LA-25		
	CIERRE COMPLETO FAGOR	**COMPLETE LOCK FAGOR**	**12038446**	**1**	**1**	**1**	**1**	01,06,15	
1	ELECTROIMAN PUERTA	DOOR ELECTROMAGNET	P613002000	1	1	1	1		
2	BASE CIERRE V3	LOCK BASE V3	P620534000	1	1	1	1		
3	TORN. ALLEN M2.5x5	ALLEN SCREW M2.5x5	Q151396000	2	2	2	2		
4	CALZO CIERRE FAGOR 13,18,25	WEDGE FAGOR LOCK 13,18,25	P620530000	1	1	1	1		
5	ARANDELA A5	WASHER A5	Q232030000	2	2	2	2		
6	TUER.AUTOB.M5	SELF-LOCK NUT M5	Q222030000	2	2	2	2		
7	INTERRUPTOR PUERTA	DOOR SWITCH	R010534000	1	1	1	1		
8	INTERRUPTOR PUERTA PLANO	FLAT DOOR SWITCH	P620526000	1	1	1	1		
9	ARAND.ABAN. A.3 A304	FAN WASHER A.3 A304	Q242010000	8	8	8	8		
10	TORNILLO ALOMADO M3X15	CURVED SCREW M3X15	Q032012000	4	4	4	4		
11	ARANDELA 16X6X1.2 A.304	WASHER 16X6X1.2 A.304	Q302022000	1	1	1	1		
12	ARAND.ABAN. A5 A.304	FAN WASHER A5 A.304	Q242030000	1	1	1	1		
13	TORN.EXA. M5X15 A.304	HEX BOLT M5X15 A.304	Q012032000	1	1	1	1		
14	TIRADOR PUERTA	DOOR PULL	P620520000	1	1	1	1		
15	ARANDELA PLANA A3,DIN125	FLAT WASHER A3,DIN125	Q232010000	6	6	6	6		
16	PRENSA ESTOPAS	STUFFING BOX	R073004000	1	1	1	1		
17	ANILLO ELECTROIMAN	ELECTROMAGNETIC RING	P620525000	1	1	1	1		
18	DESBLOQUEO	UNLOCK	P620529000	1	1	1	1		
S/Nº	CABLEADO PUERTA	DOOR WIRING	P623010000	1	1	1	1		
S/Nº	TERMINAL 0,5 COD.901901	TERMINAL 0,5 COD.901901	P620523000	2	2	2	2		
	DESDE EL Nº DE SERE 8100493065 / SINCE SERIAL NUMBER 8100493065								
	CIERRE COMPLETO FAGOR	**COMPLETE LOCK FAGOR**	**12127838**	**1**	**1**	**1**	**1**		01,06,15
1	CALZO CIERRE 2015	WEDGE LOCK 2015	12119486	1	1	1	1		
2	BASE CIERRE 2015	LOCK BASE 2015	12118270	1	1	1	1		
3	TAPA CIERRE 2015	LOCK COVER 2015	12118278	1	1	1	1		
4	ELECTROIMAN ERB35 (NAFSA)	ELECTROMAGNET ERB35	12119697	1	1	1	1		
5	INTERRUPTOR PUERTA	DOOR SWITCH	12025193	1	1	1	1		
6	INTERRUPTOR BLOQUEO (V-16-1(	BLOCKING SWITCH (V-16-1C5)	12119927	1	1	1	1		
7	BLOQUEO CIERRE 2015	LOCK BLOCKING 2015	12118307	1	1	1	1		
8	TIRADOR PUERTA	DOOR PULL	12023332	1	1	1	1		
9	SELFOIL 6x10x10 VALONA	SELFOIL 6x10x10 VALONA	12119718	1	1	1	1		

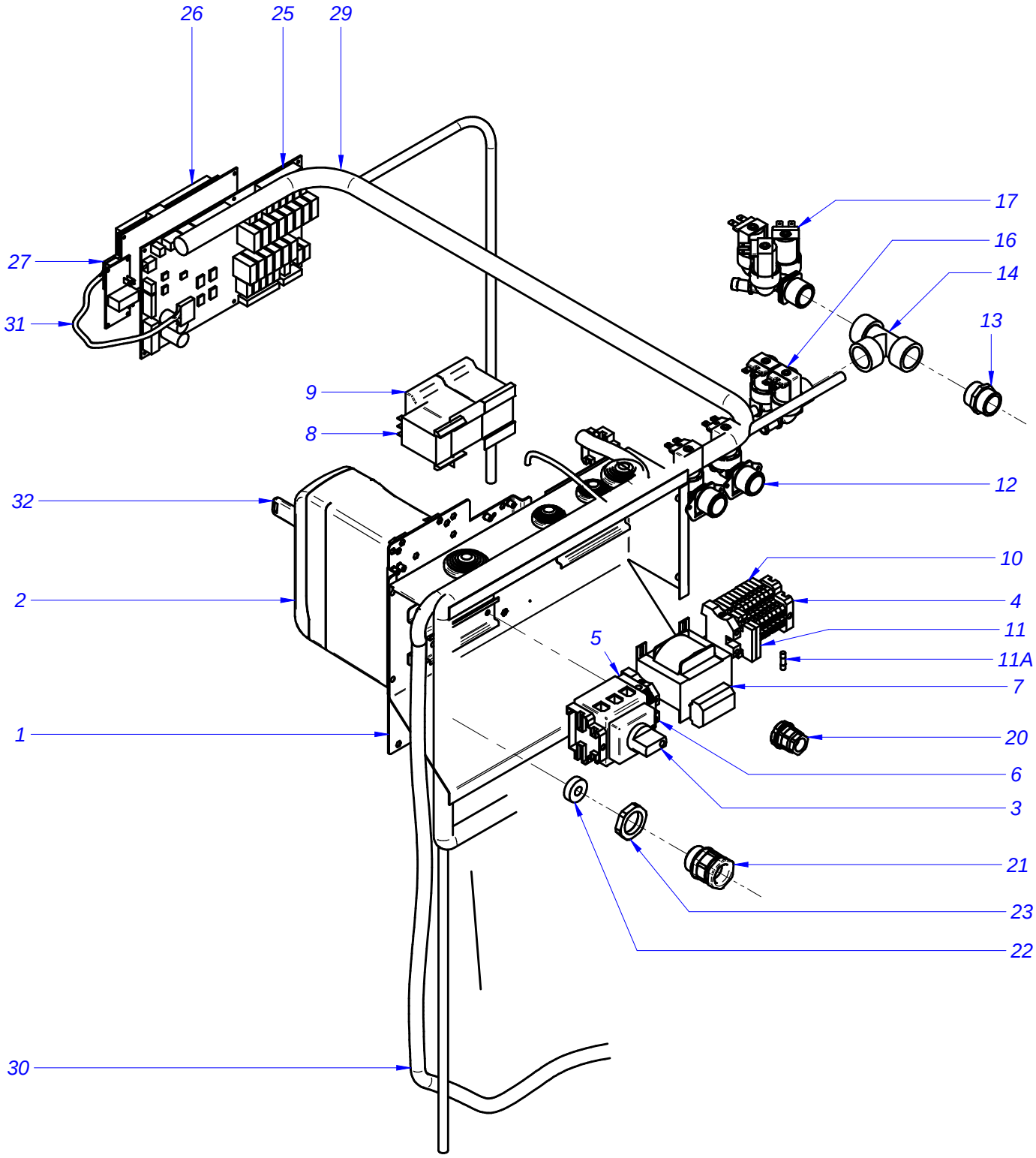

CUADRO ELECTRICO / ELECTRIC PANEL
LA-18

CUADRO ELECTRICO / ELECTRIC PANEL																					
ITEM	DENOMINACION	NAME	CODIGO	LR-18								LA-18								ELIMINADO ELIMINATED	INTRODUCIDO INTRODUCED
				MP			M			MA		MP			M			MA			
	CALENTAMIENTO			E	AC	V	E	AC	V	E	AC	E	AC	V	E	AC	V	E	AC		
1	PORTA CUADRO ELECTRICO	ELCTRIC PANEL HOLDER	P620347000	1	1	1	1	1	1	1	1										
			P644020000									1	1	1	1	1	1	1	1		
2	REP VARIADOR PROGRAMADO	REP VARIATOR PROGRAMMED	12045945	1	1	1	1	1	1	1	1									01,06,15	
			12038441									1	1	1	1	1	1	1	1	01,06,15	
2	REP VARIADOR PROG.LA-18	REP VARIATOR PROG.LA-18	12126768									1	1	1	1	1	1	1	1	SINCE 8100505377	
2	REP VARIADOR PROG.LR-18	REP VARIATOR PROG.LR-18	12126775	1	1	1	1	1	1	1	1										
3	SECCIONADOR	SECCIONADOR	12024858		1	1		1	1		1		1	1		1	1		1		
			12024628	1			1			1		1			1			1			
4	TOPE FINAL	END STOP	Z263303000	3	3	3	3	3	3	3	3	3	3	3	3	3	3	3	3		
5	BORNA AZUL	BLUE TERMINAL	12025143	1	1	1	1	1	1	1	1	1	1	1	1	1	1	1	1		
6	BORNA TIERRA	EARTH TERMINAL	12024515	1	1	1	1	1	1	1	1	1	1	1	1	1	1	1	1		
7	TRANSFORMADOR	TRANSFORMER	12024920	1	1	1	1	1	1	1	1	1	1	1	1	1	1	1	1		
8	RELE 230V AC 50/60Hz 16A 2vía	RELAY 16A 230V AC 50/60Hz 2v	12023706	1	1	1	1	1	1	1	1	1	1	1	1	1	1	1	1		
9	CONTACTOR CALENTAMIENTO	HEATING CONTACTOR	12024040	2			2			2		2			2			2		14,07,14	
			12111795	2			2			2		2			2			2			14,07,14
			12024039		1			1			1		1			1			1	14,07,14	
			12111796		1			1			1		1			1			1		14,07,14
9	CONTACTOR CALENTAMIENTO	HEATING CONTACTOR	12024011							1	1							1	1		27,03,14
10	REGLETA DOSIFICACION	DISPENSER TERMINAL STRIP	12025180	8	8	8	5	5	5	6	6	8	8	8	5	5	5	5	5		
11	BORNA PORTAFUSIBLE	FUSEHOLDER TERMINAL	R073005000	2	2	2	2	2	2	2	2	2	2	2	2	2	2	2	2		
11A	CARTUCHO FUSIBLE 4A	FUSE 4A	12024333	2	2	2	2	2	2	2	2	2	2	2	2	2	2	2	2		
12	ELECTROVALVULA SIMPLE	SIMPLE SOLENOID VALVE	12025161	2	1	2	1		1	1		2	1	2	1		1	1			
13	RACOR 3/4"	3/4" CONNECTION	12024396	1	1	1	1	1	1	1	1	1	1	1	1	1	1	1	1		
14	Te A 90º	T at 90º	P535020000	1	1	1	1	1	1	1	1	1	1	1	1	1	1	1	1		
15	TOPE ELECTROVALVULA	SOLENOID VALVE STOP	P535003000	1	1	1	1	1	1	1	1	1	1	1	1	1	1	1	1	24.04.13	
16	ELECTROVALVULA DOBLE	DOUBLE SOLENOID VALVE	12023794	1	1	1	1	1	1	1	1	1	1	1	1	1	1	1	1		
17	ELECTROVALVULA TRIPLE	TRIPLE SOLENOID VALVE	12023921	1	1	1	1	1	1	1	1	1	1	1	1	1	1	1	1		
20	PRENSA ESTOPA DOSIFICACION	DISPENSER STUFFING BOX	R073004000	1	1	1	1	1	1	1	1	1	1	1	1	1	1	1	1		
21	PRENSA ESTOPA PG-21	STUFFING BOX PG-21	R023013000	1	1	1	1	1	1	1	1	1	1	1	1	1	1	1	1		
22	JUNTA GOMA	RUBBER SEAL	R023026000	1	1	1	1	1	1	1	1	1	1	1	1	1	1	1	1		
23	TUERCA ROSCA Pg 21	SCREW THREAD Pg 21	Q223016000	1	1	1	1	1	1	1	1	1	1	1	1	1	1	1	1	18,10,13	
23	CONTRATUERCA (GAES)	LOCKNUT (GAES)	12010063	1	1	1	1	1	1	1	1	1	1	1	1	1	1	1	1		18,10,13
25	PLACA ENTRADAS-SALIDAS	INLET-OUTLET PLATE	12024457	1	1	1						1	1	1							
			12024197				1	1	1	1	1				1	1	1	1	1		
26	VISUALIZADOR	VIEWER	12023357	1	1	1						1	1	1							
			12024780				1	1	1	1	1				1	1	1	1	1		
27	INTERRUPTOR GENERAL	POWER SWITCH	12024634	1	1	1	1	1	1			1	1	1	1	1	1				
27	CABLEADO CONECTOR PUENTE	WIRING CONNECTOR BRIDGE	12025206							1	1							1	1		

CUADRO ELECTRICO / ELECTRIC PANEL																					
ITEM	DENOMINACION	NAME	CODIGO	LR-18								LA-18								ELIMINADO ELIMINATED	INTRODUCIDO INTRODUCED
				MP			M			MA		MP			M			MA			
	CALENTAMIENTO			E	AC	V	E	AC	V	E	AC	E	AC	V	E	AC	V	E	AC		
29	INSTALACION GENERAL	GENERAL INSTALLATION	12007942	1	1	1	1	1	1	1	1	1	1	1	1	1	1	1	1		
30	CABLE CALENTAMIENTO	HEATING CABLE	12024944	1			1			1		1			1			1		01.07.14	
			12111628	1			1			1		1			1			1			01.07.14
			12025067			1			1					1			1				
			12024818										1			1			1	01.07.14	
			12111694										1			1			1		01.07.14
31	CABLE COMUNICACION	COMMUNICATION CABLE	12025136	1	1	1						1	1	1							
			12023293				1	1	1	1	1				1	1	1	1	1		
32	PLC PROGRAMADO 2,2KW	PLC PROGRAMMED 2,2KW	12043486	1	1	1	1	1	1	1	1										
32	PLC PROGRAMADO 2,2KW	PLC PROGRAMMED 2,2KW	12002437									1	1	1	1	1	1	1	1		

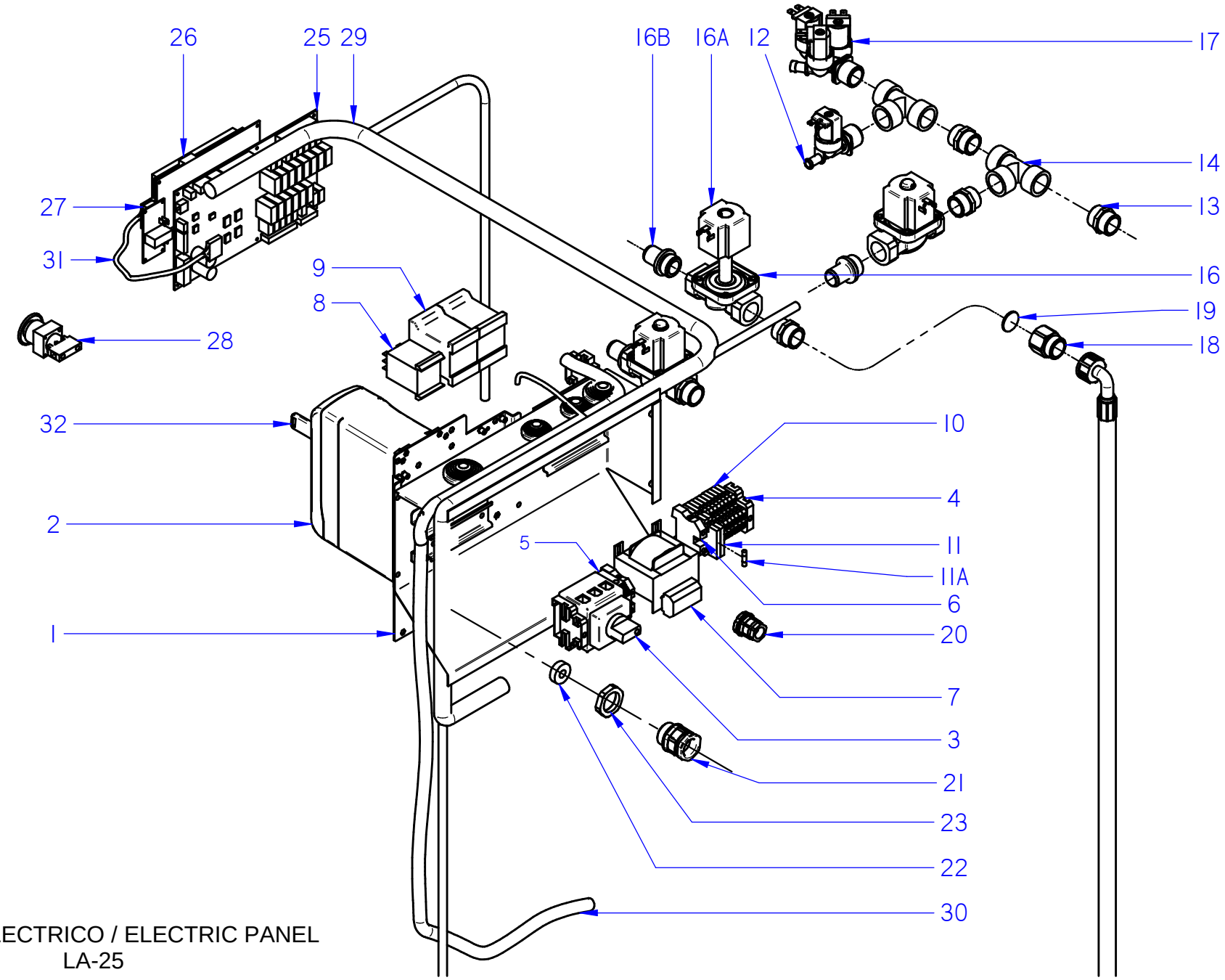

CUADRO ELECTRICO / ELECTRIC PANEL
LA-25

CUADRO ELECTRICO / ELECTRIC PANEL																					
ITEM	DENOMINACION	NAME	CODIGO	LR-25								LA-25								ELIMINADO ELIMINATED	INTRODUCIDO INTRODUCED
				MP			M			MA		MP			M			MA			
	CALENTAMIENTO			E	AC	V	E	AC	V	E	AC	E	AC	V	E	AC	V	E	AC		
1	PORTA CUADRO ELECTRICO	ELCTRIC PANEL HOLDER	P644020000	1	1	1	1	1	1	1	1	1	1	1	1	1	1	1	1		
2	REP VARIADOR PROGRA. 400V	REP VARIATOR PROGRA. 400V	12038440	1	1	1	1	1	1	1	1	1	1	1	1	1	1	1	1	13,02,12	
2	REP VARIADOR PROGRA. 230V	REP VARIATOR PROGRA. 230V	12038439	1	1	1	1	1	1	1	1	1	1	1	1	1	1	1	1	13,02,12	
2	REP VARIADOR PROGRA. LR-25	REP VARIATOR PROGRA. LR-25	12045944	1	1	1	1	1	1	1	1									01,06,15	13,02,12
2	REP VARIADOR PROGRA. LA-25	REP VARIATOR PROGRA. LA-25	12043612									1	1	1	1	1	1	1	1	01,06,15	13,02,12
2	REP VARIADOR PROGRA. LR-25	REP VARIATOR PROGRA. LR-25	12126776	1	1	1	1	1	1	1	1									SINCE 8100505377	
2	REP VARIADOR PROGRA. LA-25	REP VARIATOR PROGRA. LA-25	12126769									1	1	1	1	1	1	1	1		
3	SECCIONADOR	SECCIONADOR	12024858		1	1		1	1		1		1	1		1	1		1		
			12024628	1			1			1		1			1			1			
4	TOPE FINAL	END STOP	Z263303000	3	3	3	3	3	3	3	3	3	3	3	3	3	3	3	3		
5	BORNA AZUL	BLUE TERMINAL	12025143	1	1	1	1	1	1	1	1	1	1	1	1	1	1	1	1		
6	BORNA TIERRA	EARTH TERMINAL	12024515	1	1	1	1	1	1	1	1	1	1	1	1	1	1	1	1		
7	TRANSFORMADOR	TRANSFORMER	12024920	1	1	1	1	1	1	1	1	1	1	1	1	1	1	1	1		
8	CONTACTOR 230V AC 50/60Hz 40A	CONTACTOR 230V AC 50/60Hz 40A	12041014	2			2			2		2			2			2			
9	CONTACTOR CALENTAMIENTO	HEATING CONTACTOR	12024040		2	1		2	1		1		2	1		2	1		1	14,07,14	
9	CONTACTOR CALENTAMIENTO	HEATING CONTACTOR	12111795		2	1		2	1		1		2	1		2	1		1		14,07,14
9	CONTACTOR AUXILIAR 230V	AUXILIARY CONTACTOR 230V	12043923							1								1			01,02,12
10	REGLETA DOSIFICACION	DISPENSER TERMINAL STRIP	12025180	8	8	8	6	6	6	6	6	8	8	8	5	5	5	5	5		
11	BORNA PORTAFUSIBLE	FUSEHOLDER TERMINAL	R073005000	2	2	2	2	2	2	2	2	2	2	2	2	2	2	2	2		
11A	CARTUCHO FUSIBLE 4A	FUSE 4A	12024333	2	2	2	2	2	2	2	2	2	2	2	2	2	2	2	2		
12	ELECTROVALVULA SIMPLE	SIMPLE SOLENOID VALVE	12025161	1	1	1	1	1	1	1	1	1	1	1	1	1	1	1	1		
13	RACOR 3/4"	3/4" CONNECTION	12024396	5	5	7	4	4	6	4	4	5	5	7	4	4	6	4	4		
14	Te A 90º	T at 90º	P535020000	2	2	2	2	2	2	2	2	2	2	2	2	2	2	2	2		
15	TOPE ELECTROVALVULA	SOLENOID VALVE STOP	P535003000	1	1	1	1	1	1	1	1	1	1	1	1	1	1	1	1	24.04.13	
16	ELECTROVALVULA SIMPLE	SIMPLE SOLENOID VALVE	12023551	3	2	2	2	2	2	2	2	3	2	2	2	2	2	2	2		
16A	BOBINADO EV SIMPLE	SIMPLE SOLENOID VALVE COIL	12024622	3	2	2	2	2	2	2	2	3	2	2	2	2	2	2	2		
16B	EMPALME EV-TUBO	CONNECTION EV-PIPE	12024526	3	2	2	2	2	2	2	2	3	2	2	2	2	2	2	2		
17	ELECTROVALVULA TRIPLE	TRIPLE SOLENOID VALVE	12023921	1	1	1	1	1	1	1	1	1	1	1	1	1	1	1	1		
18	RACOR PORTA FILTRO 3/4	RACOR FILTER HOLDER 3/4	12025062	1	1	1	1	1	1	1	1	1	1	1	1	1	1	1	1		
19	FILTRO DE JUNTA N-3	JOINT FILTER N-3	12025278	1	1	1	1	1	1	1	1	1	1	1	1	1	1	1	1		
20	PRENSA ESTOPA DOSIFICACION	DISPENSER STUFFING BOX	R073004000	1	1	1	1	1	1	1	1	1	1	1	1	1	1	1	1		
21	PRENSA ESTOPA PG-21	STUFFING BOX PG-21	R023013000	1	1	1	1	1	1	1	1	1	1	1	1	1	1	1	1		
22	JUNTA GOMA	RUBBER SEAL	R023026000	1	1	1	1	1	1	1	1	1	1	1	1	1	1	1	1		
23	TUERCA ROSCA Pg 21	SCREW THREAD Pg 21	Q223016000	1	1	1	1	1	1	1	1	1	1	1	1	1	1	1	1	18,10,13	
23	CONTRATUERCA (GAES)	LOCKNUT (GAES)	12010063	1	1	1	1	1	1	1	1	1	1	1	1	1	1	1	1		18,10,13
25	PLACA ENTRADAS-SALIDAS	INLET-OUTLET PLATE	12024457	1	1	1						1	1	1							
			12024197				1	1	1	1	1				1	1	1	1	1		

CUADRO ELECTRICO / ELECTRIC PANEL																					
ITEM	DENOMINACION	NAME	CODIGO	LR-25								LA-25								ELIMINADO ELIMINATED	INTRODUCIDO INTRODUCED
				MP			M			MA		MP			M			MA			
	CALENTAMIENTO			E	AC	V	E	AC	V	E	AC	E	AC	V	E	AC	V	E	AC		
26	VISUALIZADOR	VIEWER	12023357	1	1	1						1	1	1							
			12024780				1	1	1	1	1				1	1	1	1	1		
27	INTERRUPTOR GENERAL	POWER SWITCH	12024634	1	1	1	1	1	1			1	1	1	1	1	1				
27	CABLEADO CONECTOR PUENTE	WIRING CONNECTOR BRIDGE	12025206	1	1	1	1	1	1	2	2	1	1	1	1	1	1	2	2		
28	SETA EMERGENCIA 1VIA 2POS	2POS 1WAY EMERGENCY STOP	12024904	1	1	1	1	1	1	1	1	1	1	1	1	1	1	1	1		
29	INSTALACION GENERAL	GENERAL INSTALLATION	12023366	1	1	1	1	1	1	1	1	1	1	1	1	1	1	1	1		
30	CABLE CALENTAMIENTO	HEATING CABLE	12007781	1			1			1		1			1			1			
			12025067			1			1					1			1				
			12040999										1			1				01.07.14	
			12111774										1			1					01.07.14
31	CABLE COMUNICACION	COMMUNICATION CABLE	12025136	1	1	1						1	1	1							
			12023293				1	1	1	1	1				1	1	1	1	1		
32	PLC PROGRAMADO 3KW	PLC PROGRAMMED 3KW	12043487	1	1	1	1	1	1	1	1										
32	PLC PROGRAMADO 4KW 230V	PLC PROGRAMMED 4KW 230V	12043489	1	1	1	1	1	1	1	1										
32	PLC PROGRAMADO 4KW 400V	PLC PROGRAMMED 4KW 400V	12043488	1	1	1	1	1	1	1	1										
32	PLC PROGRAMADO 3KW	PLC PROGRAMMED 3KW	12041245									1	1	1	1	1	1	1	1		
32	PLC PROGRAMADO 4KW 230V	PLC PROGRAMMED 4KW 230V	12041247									1	1	1	1	1	1	1	1		
32	PLC PROGRAMADO 4KW 400V	PLC PROGRAMMED 4KW 400V	12041246									1	1	1	1	1	1	1	1		

VARIOS / VARIOUS																				ELIMINADO ELIMINATED	INTRODUCIDO INTRODUCED
ITEM	DENOMINACION	NAME	CODIGO	LR-18								LA-18									
				MP			M			MA		MP			M			MA			
	CALENTAMIENTO			E	AC	V	E	AC	V	E	AC	E	AC	V	E	AC	V	E	AC		
	CABLEADO INTERRUP-GENER.	SWITCH WIRING-GENERAL	12025118	1	1	1	1	1	1			1	1	1	1	1	1				
	CABLE. PTC+PUENTE RECTIFIC.	PTC + WIRING BRIDGE-RECTIF.	12025061	1	1	1	1	1	1	1	1	1	1	1	1	1	1	1	1	28.04.14	
	CABLE. PTC+PUENTE RECTIFIC.	PTC + WIRING BRIDGE-RECTIF.	12095232	1	1	1	1	1	1	1	1	1	1	1	1	1	1	1	1	01.06.15	28.04.14
	CABLE. PTC+PUENTE RECTIFIC.	PTC + WIRING BRIDGE-RECTIF.	12120341	1	1	1	1	1	1	1	1	1	1	1	1	1	1	1	1		01.06.15
	CABLEADO TECLADO-SIMPLE	WIRED KEYBOARD-SIMPLE	12023293				1	1	1	1	1				1	1	1	1	1		
	CABLEADO TRANS.SIN NEUTRO	NO NEUTRAL WIRE TRANSFOR.	12025104				1														
	CABLEADO ARRASTRE-AC	TRAILING WIRING-AC	12025082		1			1			1		1			1			1		
	CABLE. ELECTR. VALV.VAPOR	WIRING ELECTROVALV.VAPOR	12025067			1			1					1			1				
	CABL. CONECTOR-PUENTE-LIM	WIRING CONN.-BRIDGE-POWER	12025206							1	1							1	1		
	CABLEADO MONEDERO C.P.	WIRED PURSE C.P	12009766							1	1							1	1	01.01.13	
	CABLEADO MONEDERO C.P.	WIRED PURSE C.P	12047190							1	1							1	1		01.01.13
	CABLEADO PROG.MP	PROGRAMMED WIRING MP	12025136	1	1	1						1	1	1							
	CABLEADO LIMITADOR	LIMITER WIRING	12024184	1	1	1	1	1	1												
	LOTE ADHESIVOS LAVADORAS	WASHERS ADHESIVE BATCH	12025140	1	1	1	1	1	1	1	1	1	1	1	1	1	1	1	1		

VARIOS / VARIOUS																					
ITEM	DENOMINACION	NAME	CODIGO	LR-25								LA-25								ELIMINADO ELIMINATED	INTRODUCIDO INTRODUCED
				MP			M			MA		MP			M			MA			
	CALENTAMIENTO			E	AC	V	E	AC	V	E	AC	E	AC	V	E	AC	V	E	AC		
	CABLEADO INTERRUP-GENER.	SWITCH WIRING-GENERAL	12025118	1	1	1	1	1	1			1	1	1	1	1	1				
	CABLE. PTC+PUENTE RECTIFIC.	PTC + WIRING BRIDGE-RECTIF.	12025061	1	1	1	1	1	1	1	1	1	1	1	1	1	1	1	1	28.04.14	
	CABLE. PTC+PUENTE RECTIFIC.	PTC + WIRING BRIDGE-RECTIF.	12095232	1	1	1	1	1	1	1	1	1	1	1	1	1	1	1	1	01.06.15	28.04.14
	CABLE. PTC+PUENTE RECTIFIC.	PTC + WIRING BRIDGE-RECTIF.	12120341	1	1	1	1	1	1	1	1	1	1	1	1	1	1	1	1		01.06.15
	CABLEADO TECLADO-SIMPLE	WIRED KEYBOARD-SIMPLE	12023293				1	1	1	1	1				1	1	1	1	1		
	CABLEADO TRANS.SIN NEUTRO	NO NEUTRAL WIRE TRANSFOR.	12025104				1														
	CABLE. ELECTR. VALV.VAPOR	WIRING ELECTROVALV.VAPOR	12025067			1			1					1			1				
	CABL. CONECTOR-PUENTE-LIM	WIRING CONN.-BRIDGE-POWER	12025206	1	1	1	1	1	1	1	1	1	1	1	1	1	1	1	1		01,02,12
	CABLEADO MONEDERO C.P.	WIRED PURSE C.P	12009766							1	1							1	1	01.01.13	
	CABLEADO MONEDERO C.P.	WIRED PURSE C.P	12047190							1	1							1	1		01.01.13
	CABLEADO PROG.MP	PROGRAMMED WIRING MP	12025136	1	1	1						1	1	1							
	CABLEADO LIMITADOR	LIMITER WIRING	12024184	1	1	1	1	1	1												06,03,12
	LOTE ADHESIVOS LAVADORAS	WASHERS ADHESIVE BATCH	12025140	1	1	1	1	1	1	1	1	1	1	1	1	1	1	1	1		

RECOMENDADOS / RECOMMENDED																				
ITEM	DENOMINACION	NAME	CODIGO	LR-18								LA-18								LÁMINA SHEET
				MP			M			MA		MP			M			MA		
	CALENTAMIENTO			E	AC	V	E	AC	V	E	AC	E	AC	V	E	AC	V	E	AC	
10	ADHESIVO	ADHESIVE	12007721	1	1	1						1	1	1						MUEBLE / CABINET
			12007722				1	1	1						1	1	1			MUEBLE / CABINET
			12007719							1	1							1	1	MUEBLE / CABINET
10	ADHESIVO CP FAGOR MA	PC ADHESIVE FAGOR MA	12007741							1	1							1	1	MUEBLE / CABINET
5	AMORTIGUADOR	DAMPER	12025077									8	8	8	8	8	8	8	8	ARMAZON / FRAME
16	SONDA TEMPERATURA	TEMPERATURE PROBE	12023814	1	1	1	1	1	1	1	1	1	1	1	1	1	1	1	1	CUBA / TUB
18	RESISTENCIA CALENTAMIENTO	HEATING RESISTOR	12096051	3			3			3		3	1		3	1		3		CUBA / TUB
14	CIERRE COMPLETO	COMPLETE LOCK	12127838	1	1	1	1	1	1	1	1	1	1	1	1	1	1	1	1	FR. CUBA / TUB FR.
3	CORREA	BELT	12023269	1	1	1	1	1	1	1	1									TAMBOR / DRUM
			12023267									1	1	1	1	1	1	1	1	TAMBOR / DRUM
13	MOTOR	ENGINE	12023194	1	1	1	1	1	1	1	1	1	1	1	1	1	1	1	1	TAMBOR / DRUM
10	EV 230V AC 50/60Hz 1 VIA	EV 230V AC 50/60Hz 1 WAY	12024404	1	1	1	1	1	1	1	1	1	1	1	1	1	1	1	1	CUBETERA / TRAY
2	REP VARIADOR PROG.LA-18	REP VARIATOR PROG.LA-18	12126768									1	1	1	1	1	1	1	1	ELECTRIC.
2	REP VARIADOR PROG.LR-18	REP VARIATOR PROG.LR-18	12126775	1	1	1	1	1	1	1	1									ELECTRIC.
3	SECCIONADOR	CIRCUIT BREAKER	12024858		1	1		1	1		1		1	1		1	1		1	ELECTRIC.
			12024628	1			1			1		1			1			1		ELECTRIC.
7	TRANSFORMADOR	TRANSFORMER	12024920	1	1	1	1	1	1	1	1	1	1	1	1	1	1	1	1	ELECTRIC.
8	RELE 230V AC 50/60Hz 16A 2vía	RELAY 16A 230V AC 50/60Hz 2v	12023706	1	1	1	1	1	1			1	1	1	1	1	1			ELECTRIC.
8	CONTACTOR 230V AC 50/60Hz	CONTACTOR 230V AC 50/60Hz	12024011							1	1							1	1	ELECTRIC.
9	CONTACTOR CALENTAMIENTO	HEATING CONTACTOR	12111795	2			2			2		2			2			2		ELECTRIC.
10	CONTACTOR CALENTAMIENTO	HEATING CONTACTOR	12111796		1			1			1		1			1			1	ELECTRIC.
12	ELECTROVALVULA SIMPLE	SIMPLE SOLENOID VALVE	12025161	2	1	2	1		1			2	1	2	1		1	1		ELECTRIC.
16	ELECTROVALVULA DOBLE	DOUBLE SOLENOID VALVE	12023794	1	2	1	1	2	1	1	2	1	2	1	1	2	1	1	2	ELECTRIC.
17	ELECTROVALVULA TRIPLE	TRIPLE SOLENOID VALVE	12023921	1	1	1	1	1	1	1	1	1	1	1	1	1	1	1	1	ELECTRIC.
25	PLACA ENTRADAS-SALIDAS	INLET-OUTLET PLATE	12024457	1	1	1						1	1	1						ELECTRIC.
25	PLACA ENTRADAS-SALIDAS	INLET-OUTLET PLATE	12024197				1	1	1	1	1				1	1	1	1	1	ELECTRIC.
26	VISUALIZADOR	VIEWER	12023357	1	1	1						1	1	1						ELECTRIC.
26	VISUALIZADOR	VIEWER	12024780				1	1	1	1	1				1	1	1	1	1	ELECTRIC.
27	INTERRUPTOR GENERAL	POWER SWITCH	12024634	1	1	1	1	1	1			1	1	1	1	1	1			ELECTRIC.
32	PLC PROGRAMADO 2,2KW	PLC PROGRAMMED 2,2KW	12043486	1	1	1	1	1	1	1	1									ELECTRIC.
32	PLC PROGRAMADO 2,2KW	PLC PROGRAMMED 2,2KW	12002437									1	1	1	1	1	1	1	1	ELECTRIC.

RECOMENDADOS / RECOMMENDED																				
ITEM	DENOMINACION	NAME	CODIGO	LR-25								LA-25								LÁMINA SHEET
				MP			M			MA		MP			M			MA		
	CALENTAMIENTO			E	AC	V	E	AC	V	E	AC	E	AC	V	E	AC	V	E	AC	
10	ADHESIVO	ADHESIVE	12007721	1	1	1						1	1	1						MUEBLE / CABINET
			12007722				1	1	1						1	1	1			MUEBLE / CABINET
			12007719							1	1							1	1	MUEBLE / CABINET
10	ADHESIVO CP FAGOR MA	PC ADHESIVE FAGOR MA	12007741							1	1							1	1	MUEBLE / CABINET
5	AMORTIGUADOR	DAMPER	12024980									8	8	8	8	8	8	8	8	ARMAZON / FRAME
16	SONDA TEMPERATURA	TEMPERATURE PROBE	12023814	1	1	1	1	1	1	1	1	1	1	1	1	1	1	1	1	CUBA / TUB
18	RESISTENCIA CALENTAMIENTO	HEATING RESISTOR	12041359	3			3			3		3			3			3		CUBA / TUB
18	RESISTENCIA CALENTAMIENTO	HEATING RESISTOR	12096226										3			3				CUBA / TUB
14	CIERRE COMPLETO	COMPLETE LOCK	12127838	1	1	1	1	1	1	1	1	1	1	1	1	1	1	1	1	FR. CUBA / TUB FR.
3	CORREA	BELT	12007744	1	1	1	1	1	1	1	1									TAMBOR / DRUM
			12023252									1	1	1	1	1	1	1	1	TAMBOR / DRUM
13	MOTOR	ENGINE	12023189	1	1	1	1	1	1	1	1	1	1	1	1	1	1	1	1	TAMBOR / DRUM
10	EV 230V AC 50/60Hz 1 VIA	EV 230V AC 50/60Hz 1 WAY	12024404	1	1	1	1	1	1	1	1	1	1	1	1	1	1	1	1	CUBETERA / TRAY
2	REP VARIADOR PROGRA. LR-25	REP VARIATOR PROGRA. LR-25	12126776	1	1	1	1	1	1	1	1									ELECTRIC.
2	REP VARIADOR PROGRA. LA-25	REP VARIATOR PROGRA. LA-25	12126769									1	1	1	1	1	1	1	1	ELECTRIC.
3	SECCIONADOR	CIRCUIT BREAKER	12024858		1	1		1	1		1		1	1		1	1		1	ELECTRIC.
			12024628	1			1			1		1			1			1		ELECTRIC.
7	TRANSFORMADOR	TRANSFORMER	12024920	1	1	1	1	1	1	1	1	1	1	1	1	1	1	1	1	ELECTRIC.
8	CONTACTOR 230V AC 50/60Hz	CONTACTOR 230V AC 50/60Hz	12041014	2			2			2		2			2			2		ELECTRIC.
9	CONTACTOR CALENTAMIENTO	HEATING CONTACTOR	12111795	2			2			2		2			2			2		ELECTRIC.
9	CONTACTOR AUXILIAR 230V	AUXILIARY CONTACTOR 230V	12043923							1								1		ELECTRIC.
12	ELECTROVALVULA SIMPLE	SIMPLE SOLENOID VALVE	12025161	2	1	2	1		1			2	1	2	1		1	1		ELECTRIC.
16	ELECTROVALVULA SIMPLE	SIMPLE SOLENOID VALVE	12023551	3	2	2	2	2	2	2	2	3	2	2	2	2	2	2	2	ELECTRIC.
16A	BOBINADO EV SIMPLE	SIMPLE SOLENOID VALVE COIL	12024622	3	2	2	2	2	2	2	2	3	2	2	2	2	2	2	2	ELECTRIC.
17	ELECTROVALVULA TRIPLE	TRIPLE SOLENOID VALVE	12023921	1	1	1	1	1	1	1	1	1	1	1	1	1	1	1	1	ELECTRIC.
25	PLACA ENTRADAS-SALIDAS	INLET-OUTLET PLATE	12024457	1	1	1						1	1	1						ELECTRIC.
25	PLACA ENTRADAS-SALIDAS	INLET-OUTLET PLATE	12024197				1	1	1	1	1				1	1	1	1	1	ELECTRIC.
26	VISUALIZADOR	VIEWER	12023357	1	1	1						1	1	1						ELECTRIC.
26	VISUALIZADOR	VIEWER	12024780				1	1	1	1	1				1	1	1	1	1	ELECTRIC.
27	INTERRUPTOR GENERAL	POWER SWITCH	12024634	1	1	1	1	1	1			1	1	1	1	1	1			ELECTRIC.
32	PLC PROGRAMADO 3KW	PLC PROGRAMMED 3KW	12043487	1	1	1	1	1	1	1	1									ELECTRIC.
32	PLC PROGRAMADO 3KW	PLC PROGRAMMED 3KW	12041245									1	1	1	1	1	1	1	1	ELECTRIC.

LAVAD/E - 10,13,18 MPP, M

LAVAD/V - 10,13,18 MPP, M

LAVAD/AC - 10,13,18 MPP, M

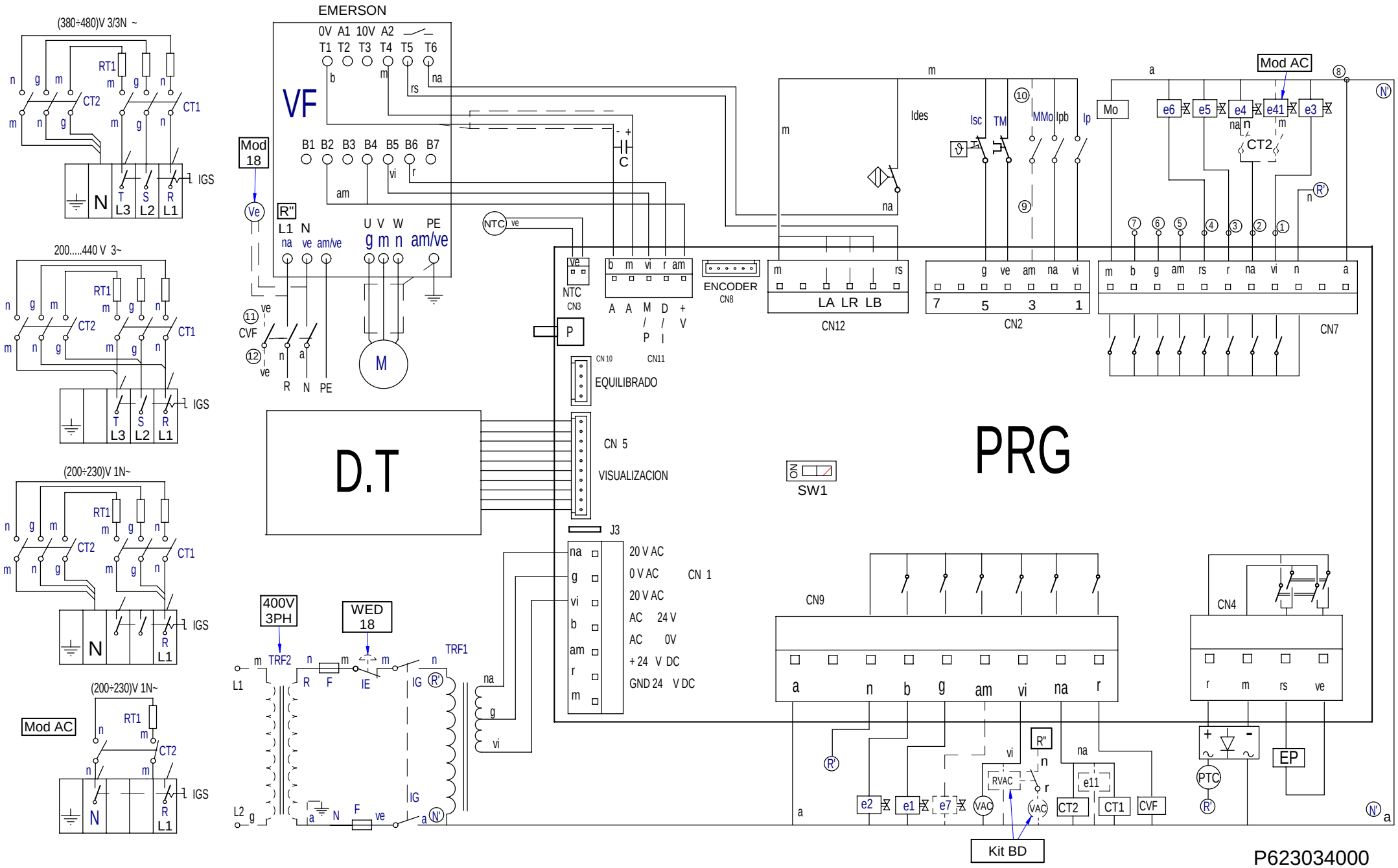

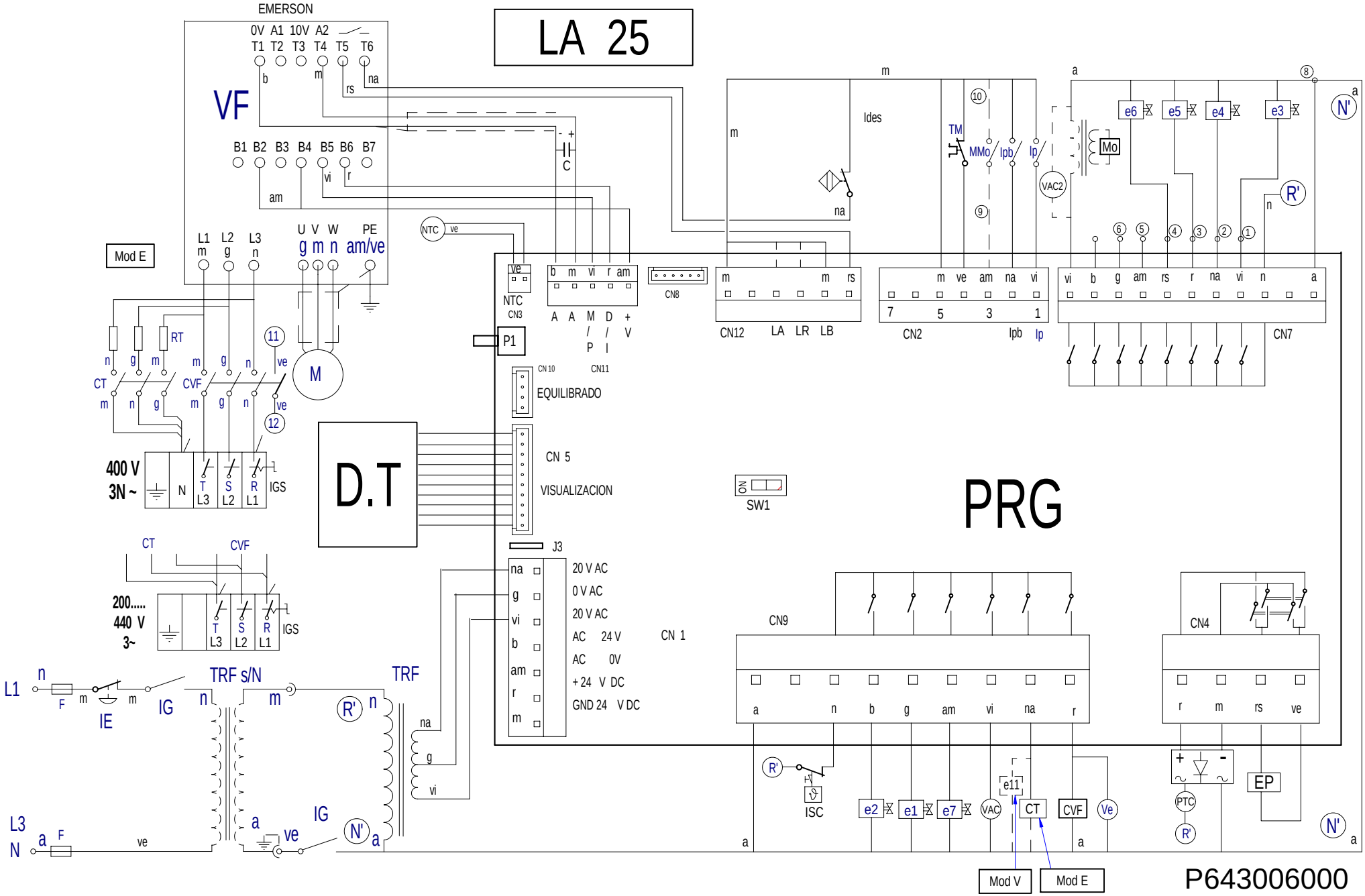
LA 25
EMERSON
VF
0V A1 10V A2
T1 T2 T3 T4 T5 T6
B1 B2 B3 B4 B5 B6 B7
L1 L2 L3
U V W PE
Mod E
RT
CT
CVF
M
400 V
3N ~
IGS
D.T
CN 5
VISUALIZACION
EQUILIBRADO
P1
NTC
CN3
CN8
CN12
CN2
CN7
SW1
PRG
J3
20 V AC
0 V AC
20 V AC
AC 24 V
AC 0V
+ 24 V DC
GND 24 V DC
CN 1
CN9
CN4
200.....
440 V
3~
L1
L3
N
TRF s/N
TRF
IE
IG
F
ISC
EP
PTC
Mod V
Mod E
P643006000

Simb / LENG	ESPAÑOL	FRANÇAIS	ENGLISH	DEUTSCH	ITALIANO
CT =	Contactor Calentamiento	Contacteur Chauffe	Heating Contactor	Heizschütz	Contatore Riscaldamento
DP =	Detector posición.	Détecteur position	Position detector	Stellung Taster	Rilevatore posizione
DS1	Dosificador Neutralizante.	Doseur Neutralisant	Neutralizer feeder	Dosiervorrichtung Neutralspülmittel	Dosatore Neutralizzante
DS2	Dosificador jabon liquido.	Doseur lessive liquide	Liquid soap feeder	Dosiervorrichtung Flüssigseife	Dosatore sapone liquido
DS3	Dosificador aditivos.	Doseur additifs	Additive feeder	Dosiervorrichtung Zusatzmittel	Dosatore additivi
D.T.	Display/Teclado	Écran/Clavier	Display/Keyboard	Display/Tastatur	Display/Tastiera
e1 =	Electro válvula agua Fria.	Électrovanne eau Froide	Cold water electrically operated valve	Elektroventil Kaltwasser	Elettrovalvola acqua Fredda
e2 =	Electro válvula agua Caliente	Électrovanne eau Chaude	Hot water electrically operated valve	Elektroventil Warmwasser	Elettrovalvola acqua Calda
e3 =	Electro válvula Prelavado.	Électrovanne Prélavage	Pre-wash electrically operated valve	Elektroventil Vorwaschen	Elettrovalvola Prelavaggio
e4 =	Electro válvula Lavado.	Électrovanne Lavage	Wash electrically operated valve	Elektroventil Hauptwaschgang	Elettrovalvola Lavaggio
e5 =	Electro válvula Lejía.	Électrovanne Eau de Javel	Bleach electrically operated valve.	Elektroventil Bleiche	Elettrovalvola Candeggina
e6 =	Electro válvula Suavizante.	Électrovanne Assouplissant	Fabric softener electrically operated valve	Elektroventil Weichspüler	Elettrovalvola Ammorbidente
e7 =	Electro válvula agua Descalcificada	Électrovanne eau Adoucie	Delimed water electrically operated valve	Elektroventil entkalktes Wasser	Elettrovalvola acqua Decalcificata
e8 ,9,10 =	Electro válvula Equilibrado	Électrovanne Équilibrage	Balancer electrically operated valve	Elektroventil Gleichgewicht	Elettrovalvola Bilanciamento
e11 =	Electro válvula Vapor.	Électrovanne Vapeur	Steam electrically operated valve	Elektroventil Dampf	Equilibrado Vapore
EP =	Electroimán de Puerta.	Électro-aimant de Porte	Door electric magnet	Elektromagnet Gerätetür	Elettromagnete Porta
FI =	Filtro de Interferencias.	Filtre Anti-parasites	Interference filter	Störungsfilter	Filtro Interferenze
F =	Fusible.	Fusible	Fuse	Sicherung	Fusibile
G1,G2 =	Galga Sensor.	Jauge Capteur	Sensing gage	Meßsensor	Calibro Sensore
IE =	Pulsador Parada de emergencia.	Bouton-poussoir Arrêt d'urgence	Emergency stop push button	Not-Aus-Taster	Pulsante Arresto di emergenza
IG =	Interruptor general.	Interrupteur général	General switch	Hauptschalter	Interruttore generale
IGS =	Interruptor General de seguridad.	interrupteur Général de sécurité	General safety switch	Sicherheitshauptschalter	Interruttore Generale di sicurezza
Ides =	Interruptor de desequilibrio.	Interrupteur de balourd	Unbalance switch	Ungleichgewichtsschalter	Interruttore di squilibrio
IMo =	Interruptor Monedero.	Interrupteur Monnayeur	Coin slote switch	Münzschalter	Interruttore Portamonete
Ip =	Interruptor puerta Cerrada.	Interrupteur porte Fermée	Closed door switch	Schalter Tür geschlossen	Interruttore porta Chiusa
Ipb =	Interruptor puerta bloqueada.	Interrupteur porte verrouillée	Door lock switch	Schalter Tür verriegelt	Interruttore porta bloccata
Isc	Interruptor seguridad Temperatura	Thermostat Limiteur	Hi-limit Thermostat	Grenzthermostat	Termostato Limitatore
M =	Motor.	Moteur	Motor	Motor	Motore
Mo =	Monedero.	Monnayeur	Coin slot	Münzvorrichtung	Portamonete
NTC =	Sensor temperatura..	Capteur température	Temperature sensor	Temperatursensor	Sensore temperatura
RT =	Resistencia Calentamiento.	Résistance Chauffe	Heating Resistors	Widerstand Aufheizung	Resistenza Riscaldamento
Tm =	Térmico de Motor.	Thermique du Moteur	Motor hot-wire	Motorwärmeschalter	Termico del Motore
Trf =	Transformador	Transformateur	Transformer	Transformator	Trasformatore
Trf s/N =	Transformador Versión sin Neutro.	Transformateur Version sans Neutre	Transformer Version without Neutral	Transformator Modell ohne Neutralstellung	Trasformatore Versione senza Neutro
VAC =	Válvula Vaciado	Vanne Vidange	Emptying valve	Ablassventil	Valvola Scarico
Ve =	Ventilador.	Ventilateur	Fan	Ventilator	Ventola
VF =	Convertidor de Frecuencia.	Convertisseur de Fréquence	Frequency converter	Frequenzumwandler	Convertitore di Frequenza
VM =	Ventilador Motor.	Ventilateur Moteur	Fan motor	Ventilator Motor	Ventola Motore
1...8 =	Puntos conexión dosificadores.	Points raccordement doseurs	Feeder connection points	Anschlussstellen Dosiervorrichtungen	Punti connessione dosatori
COLOR	**COLORES**	**COULEURS**	**COLOUR**	**FARBEN**	**COLORE**
a =	Azul	Bleu	Blue	Blau	Blu
am =	Amarillo	Jaune	Yellow	Gelb	Giallo
am/ve =	Amarillo/verde	Jaune / vert	Yellow / green	Gelb/grün	Giallo/verde
b =	Blanco	Blanc	White	Weiß	Bianco
g =	Gris	Gris	Grey	Grau	Grigio
m =	Marrón	Marron	Brown	Braun	Marrone
n =	Negro	Noir	Black	Schwarz	Nero
na =	Naranja	Orange	Orange	Orange	Arancio
r =	Rojo	Rouge	Red	Rot	Rosso
rs =	Rosa	Rose	Pink	Rosa	Roseo
ve =	Verde	Vert	Green	Grün	Verde
vi =	Violeta	Violet	Purple	Violett	Viola