SAGI - SELF-SERVICE
EKV21C - 29-02-2000 »

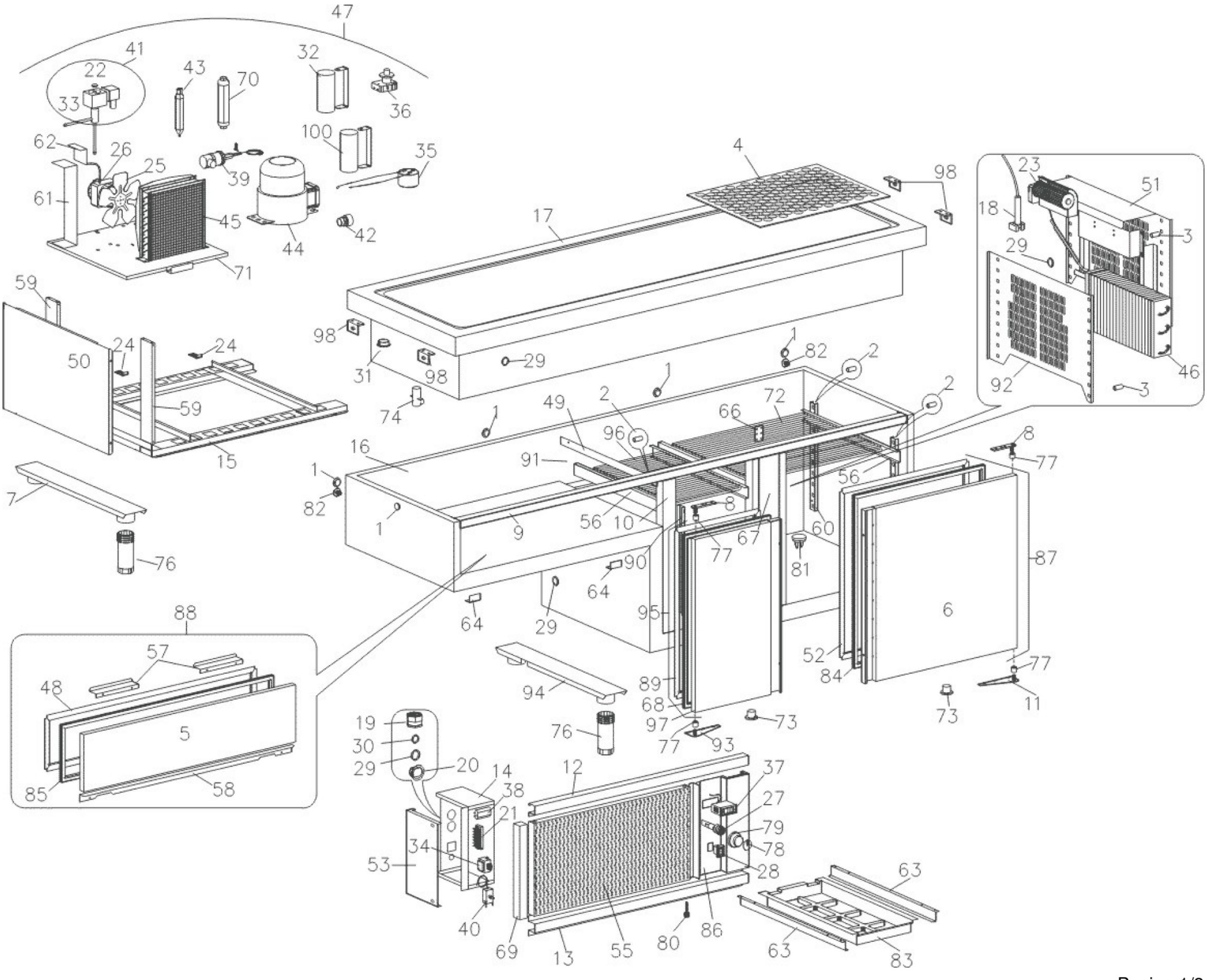

SAGI - SELF-SERVICE
EKV21C - A000180 - VETRINA REFRIGERATA DA cm 217.5 CLAPPE - 29-02-2000 »

