	TABLE	REV
	KI9113	01

ASCIUGATURA RINFORZATA

DRYING REINFORCED

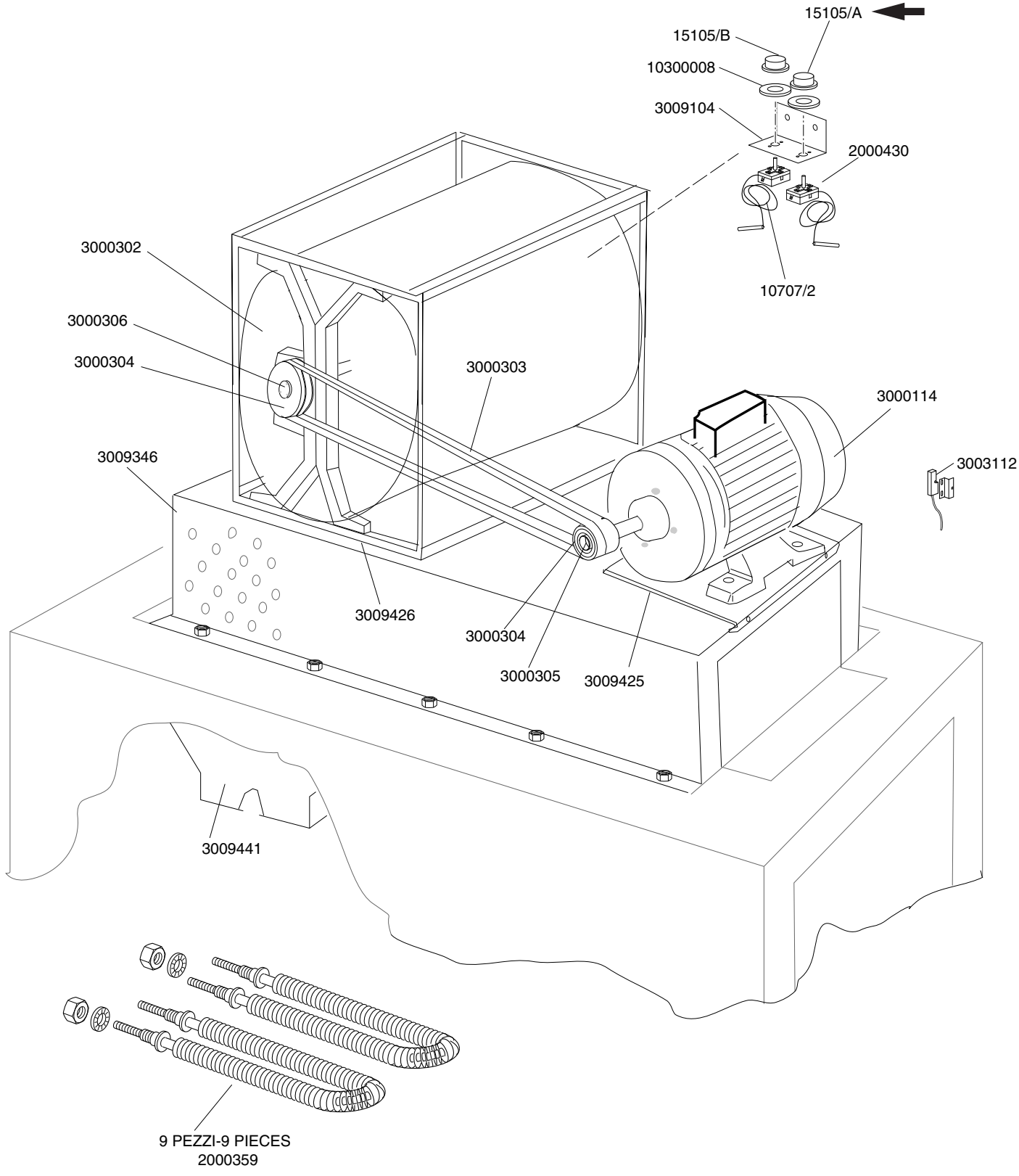

INCREASED DRYING

TABLE KI9113

CODE	DESCRIPTION	CODE	DESCRIPTION
2000359	2000W drying heating element		
2000430	Safety thermostat		
3000114	1,5Kw 50Hz motor		
3000302	Fan with double propeller		
3000303	Belt		
3000304	Pulley		
3000305	1108-24 bush		
3000306	1108-25 bush		
3003112	Reed micro strocke end		
3009104	Thermostat support		
3009346	Frame for heat. elem. and impeller support		
3009425	Slide for motor		
3009426	Fan complete flange		
3009441	Complete air conveyor		
10300008	Bush for thermostat		
10702/2	0-90° TR2 thermostat with shaft		
→ 15105/A	0-90° thermostat handle		