FAGOR

FAGOR INDUSTRIAL

DESPIECE TÉCNICO
SPARE PARTS – EXPLODED VIEW

Marmitas
Boiling pans

MODELOS / MODELS
M-E910 BM
M-E915 BM

MARZO 2017 MARCH
Revisado Octubre 2017 October revised

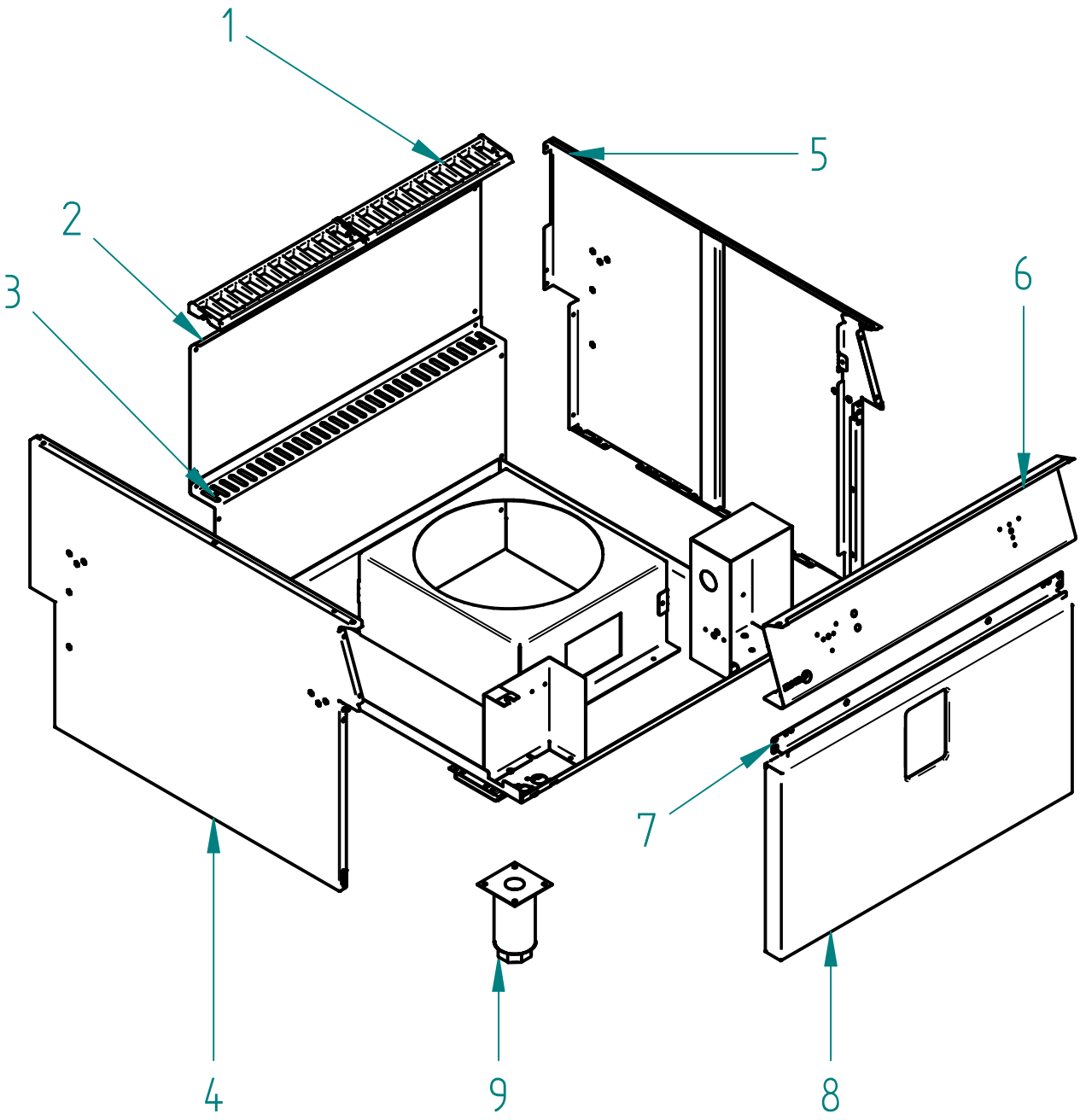

Fecha	Firma	MUEBLE	Pagina
		M-E910/915	1

FAGOR

ZONA / ZONE	MUEBLE / UNIT	LÁMINA / DRAWING	C-3284	FAGOR

ITEM	REFERENCIA REFERENCE	DENOMINACIÓN	DENOMINATION	M-E910	M-E915							ELIMINADO ELIMINATED	INTRODUCIDO INTRODUCED	NOTAS / NOTES
1	12119756	EMBELLECEDOR CHIMENEA FUNDIDO G900-2014	CAST IRON CHIMNEY TRIM G900-2014	2	2									
2	12048249	PANEL POSTERIOR SUP 1M	UPPER BACK PANEL 1M	1	1									
3	12048265	PANEL POSTERIOR INF	LOWER BACK PANEL	1	1									
4	12125200	PANEL LATERAL IZQU. COMP ALTO	REF. HIGH COMP LEFT SIDE PANEL	1	1									
5	12125202	PANEL LATERAL DCHO. COMP ALTO	REF. HIGH COMP RIGHT SIDE PANEL	1	1									
6	12093742	PORTAMANDOS MG-900	MG-900 CONTROL TRIM HOLDER	1	1									
7	12092421	LISTON	STRIP	1	1									
8	12112160	PANEL FRONTAL ME9-10 BM	FRONTAL ME9-10 BM PANEL	1	1									
9	12009104	PATA REGULABLE	ADJUSTABLE LEG	4	4									

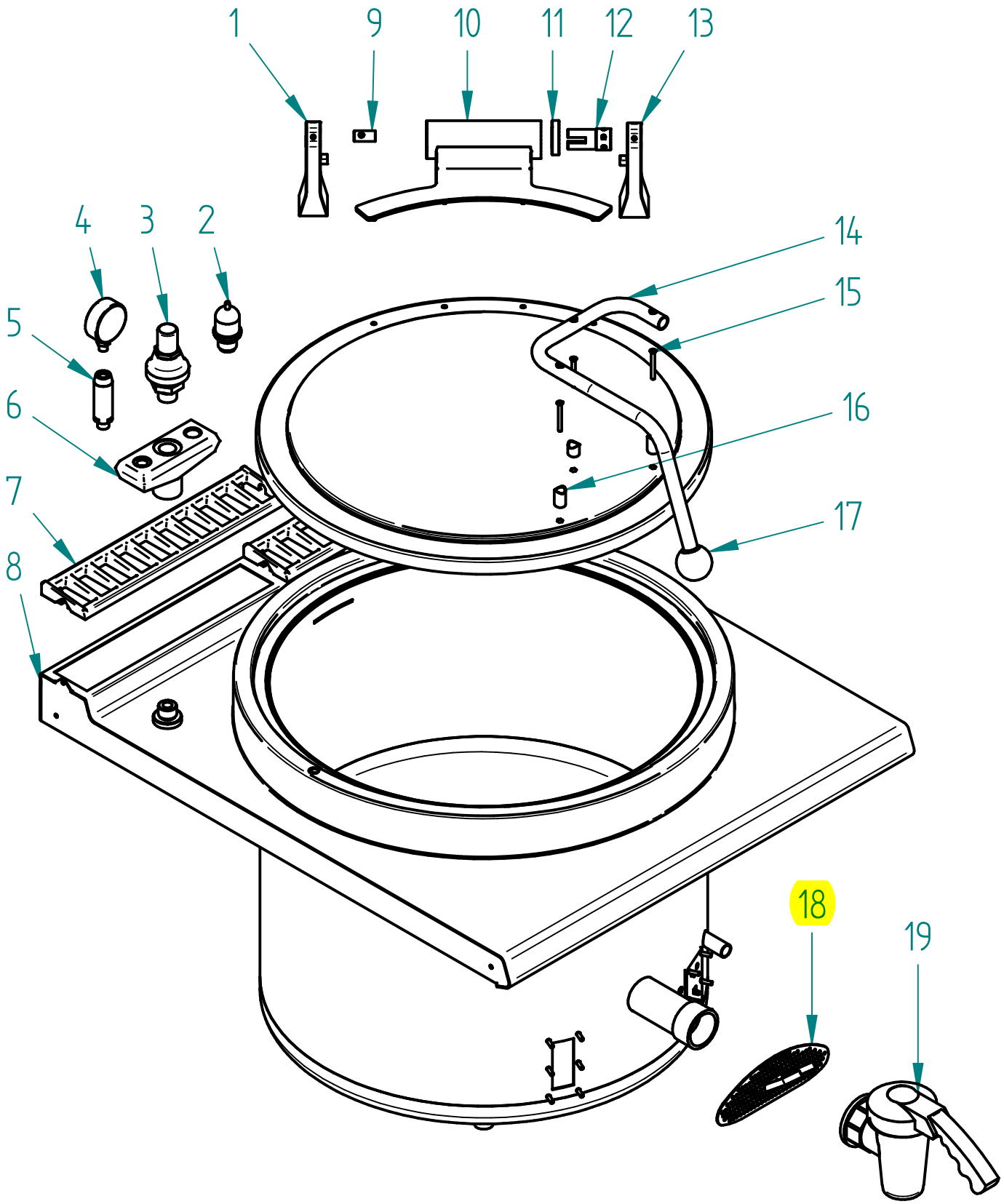

Fecha	Firma	CUBA+ENCIMERA	Pagina
		M-E910/915	3

FAGOR

ZONA / ZONE	CUBA / CUBE	LÁMINA / DRAWING	C-3284	FAGOR

ITEM	REFERENCIA REFERENCE	DENOMINACIÓN	DENOMINATION	M-E910	M-E915						RECOMMENDED	ELIMINADO ELIMINATED	INTRODUCIDO INTRODUCED	NOTAS / NOTES
1	12126966	SOPORTE BISAGRA DCH.	RIGHT HINGE SUPPORT	1	1									
2	12009434	VÁLVULA PRESION 01509004	01509004 PRESSURE VALVE	1	1									
3	12009531	VÁLVULA SEGURIDAD	SAFETY VALVE	1	1									
4	12009399	MANÓMETRO 36303601	PRESSURE GAUGE 36303601	1	1									
5	12009418	PORTAMANÓMETRO 2210617	PRESSURE GAUGE HOLDER 2210617	1	1									
6	12009448	SOPORTE 3 SALIDAS 22805062	3-OUTPUT SUPPORT 22805062	1	1									
7	12119756	EMBELLECEDOR CHIMENEA FUNDIDO G900-2014	CAST IRON CHIMNEY TRIM G900-2014	2	2									
8	12111997	CUBA ME9-10 BM	TUB ME9-10 BM	1	1									
9	12127002	CASQUILLO GIRO	TURN SLEEVE	1	1									
10	12127005	BISAGRA COMPLETA	COMP. HINGE	1	1									
11	12118811	CASQUILLO LATON Ø28-Ø48-10	BRASS SLEEVE	1	1									
12	12127003	CASQUILLO TENSOR	TENSOR SLEEVE	1	1									
13	12126967	SOPORTE BISAGRA IZQ.	LEFT HINGE SUPPORT	1	1									
14	12094144	ASA MARMITA	STOCKPOT HANDLE	1	1									
15	12154782	M5 x 45 INOX DIN 964	M5 x 45 INOX DIN 964	3	3									
16	12111055	SOPORTE ASA POST.	BACK HANDLE SUPPORT	3	3									
17	12118381	POMO ASA MARMITA	STOCKPOT KNOB HANDLE	1	1									
18	12131754	MOD. FILTRO	MOD. FILTER	1	1						X			
19	12008914	GRIFO VACIADO 2	DRAINAGE TAP 2	1	1									

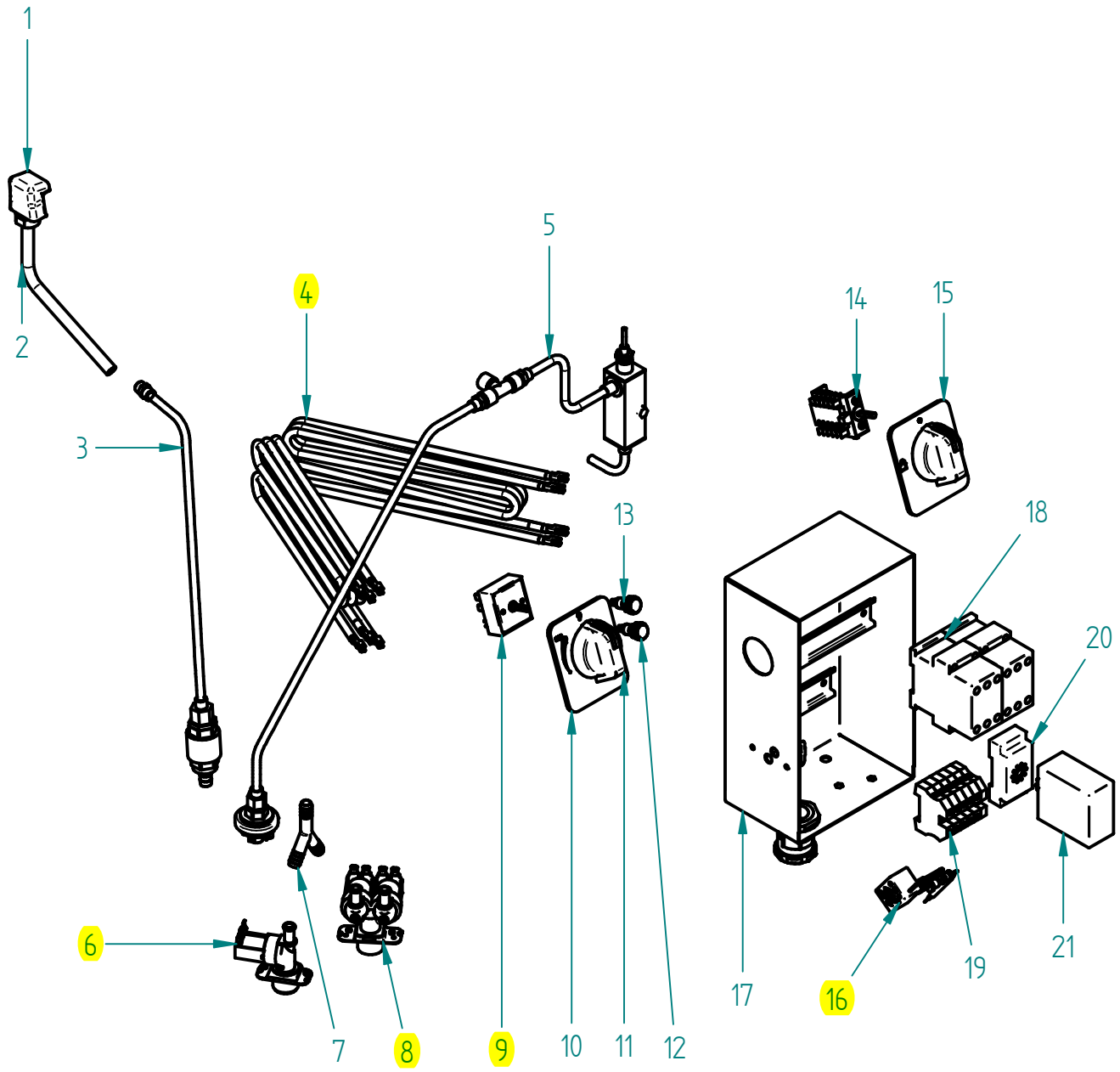

Fecha	Firma	CONJUNTO FUNCIONAL	Pagina
		M-E910/915	5

FAGOR

ZONA / ZONE	CONJUNTO FUNCIONAL / FUNCTIONAL PART	LÁMINA / DRAWING	C-3284	FAGOR

ITEM	REFERENCIA REFERENCE	DENOMINACIÓN	DENOMINATION	M-E910	M-E915						RECOMMENDED	ELIMINADO ELIMINATED	INTRODUCIDO INTRODUCED	NOTAS / NOTES
1	12111179	GRIFO LLENADO	FILLER TAP	1	1									
2	12111188	TUBO INF GRIFO LLENADO	FILLER TAP LOWER PIPE	1	1									
3	12131753	MOD. PANEL FRONTAL M-E910 BM P	MOD. FRONTAL PANEL M-E910 BM P	1	1									
4	12133236	RESISTENCIA 3x3666 230V	3x3666 230V RESISTOR	2	2						X			
5	12131747	MOD. BOTE NIVEL + PRESOSTATO	MOD. LEVEL CONTAINER +PRESSURE	1	1									
6	12025161	ELECTROVÁLCULA 230V AC 50/60Hz 1vía Agua	Solenoid Valve 230V AC 50/60Hz 1way W	1	1						X			
7	12023511	RACORD EN Y	RACORD IN Y	1	1									
8	12023794	ELECTROVÁLVULA 230V AC 50/60Hz 2vía Agua	Solenoid Valve 230V AC 50/60Hz 2way W	1	1						X			
9	12024522	Regulador Energia 230V AC 50/60Hz 13A	ENERGY REGULATOR 230V AC 50/60Hz	1	1						X			
10	12155186	EMBELLECEDOR MANDO MAX-MIN	MAX-MIN CONTROL TRIM	1	1									
11	12122603	Mando ELECTRICO 2015	ELECTRIC CONTROL 2015	1	1									
12	12047390	Piloto 230V AC 8KW 16MM 18X36 Verde VDE	230V AC 8KW 16MM 18x36 GR. PILOT	1	1									
13	12024669	PILOTO AMBAR D18	AMBER PILOT LIGHT D18	1	1									
14	12023800	Conmutador Funcion 16A 6vía 4pos VDE	FUNCTION SWITCH 16A 6WAY 4POS GI	1	1									
15	12127406	EMBELLECEDOR AGUA MARMITA	COOKING POT WATER TRIM	1	1									
16	12023830	Termostato Seguridad 125°C	Safety thermostat 125°C	1	1						X			
17	12095230	CAJA ELECTRICA	ELECTRIC BOX	1	1									
18	12024075	Contactor 230V AC 50/60Hz 40A 3via UL	230V AC 50/60Hz 40A 3via UL CONTAC.	2	2									
19	12023727	BORNA A TIERRA WEIDMULLER	WEIDMULLER GROUND TERMINAL	1	1									
19	12025214	BORNA PASO 76A 16MM2 1VÍA UL	STEP TERM. 76A 16MM2 1WAY UL	4	4									
19	12025171	TOPE FINAL BORNA 35mm2 UL	FINAL LIMIT TERM. 35MM2 UL	1	1									
20	12024185	10A 11VÍA BASE ENCHUFABLE	PLUGGABLE BASE 10A 11WAY	1	1									
21	12024209	CONTROL NIVEL 230V AC 50/60Hz	230V AC 50/60Hz LEVEL CONTROL	1	1									

ZONA / ZONE	VARIOS / VARIOUS	LÁMINA / DRAWING	C-3285	FAGOR

ITEM	REFERENCIA REFERENCE	DENOMINACIÓN	DENOMINATION	M-E910	M-E915						RECOMMENDED	ELIMINADO ELIMINATED	INTRODUCIDO INTRODUCED	NOTAS / NOTES
	12159971	FOLLETO MARMITA ELÉCTRICA	ELECTRIC STOCKPOT LEAFLET	1	1									
	12137624	CABLEADO TENSOR PORTAMANDOS	CONTROL TRIM HOLDER TENSOR WIR	2	2									

ZONA / ZONE	RECOMENDADOS / RECOMMENDED	LÁMINA / DRAWING	FAGOR

ITEM	REFERENCIA REFERENCE	DENOMINACIÓN	DENOMINATION	M-E910	M-E915						RECOMMENDED	ELIMINADO ELIMINATED	INTRODUCIDO INTRODUCED	NOTAS / NOTES
4	12133236	RESISTENCIA 3x3666 230V	3x3666 230V RESISTOR	2	2						X			
6	12025161	ELECTROVÁLCULA 230V AC 50/60Hz 1vi	Solenoid Valve 230V AC 50/60Hz 1way Wa	1	1						X			
8	12023794	ELECTROVÁLVULA 230V AC 50/60Hz 2ví	Solenoid Valve 230V AC 50/60Hz 2way Wa	1	1						X			
9	12024522	Regulador Energia 230V AC 50/60Hz 13A	ENERGY REGULATOR 230V AC 50/60Hz	1	1						X			
16	12023830	Termostato Seguridad 125°C	Safety thermostat 125°C	1	1						X			
18	12131754	MOD. FILTRO	MOD. FILTER	1	1						X			