DESPIECE TECNICO

# Lavavasos
# Lave-verres
# Glass-washer
# Glaserspülmaschinen
# Lavabicchieri
# Lavacopos

## Modelos:

**AD-15**
**AD-21**
**AD-15 D**
**AD-21 B**
**AD-21 D**
**AD-21 W**
**AD-21 DD**
**AD-21 B DD**

***Diciembre 2009 December***
***Revisado Julio 2013 July Revised***

FAGOR

FAGOR INDUSTRIAL

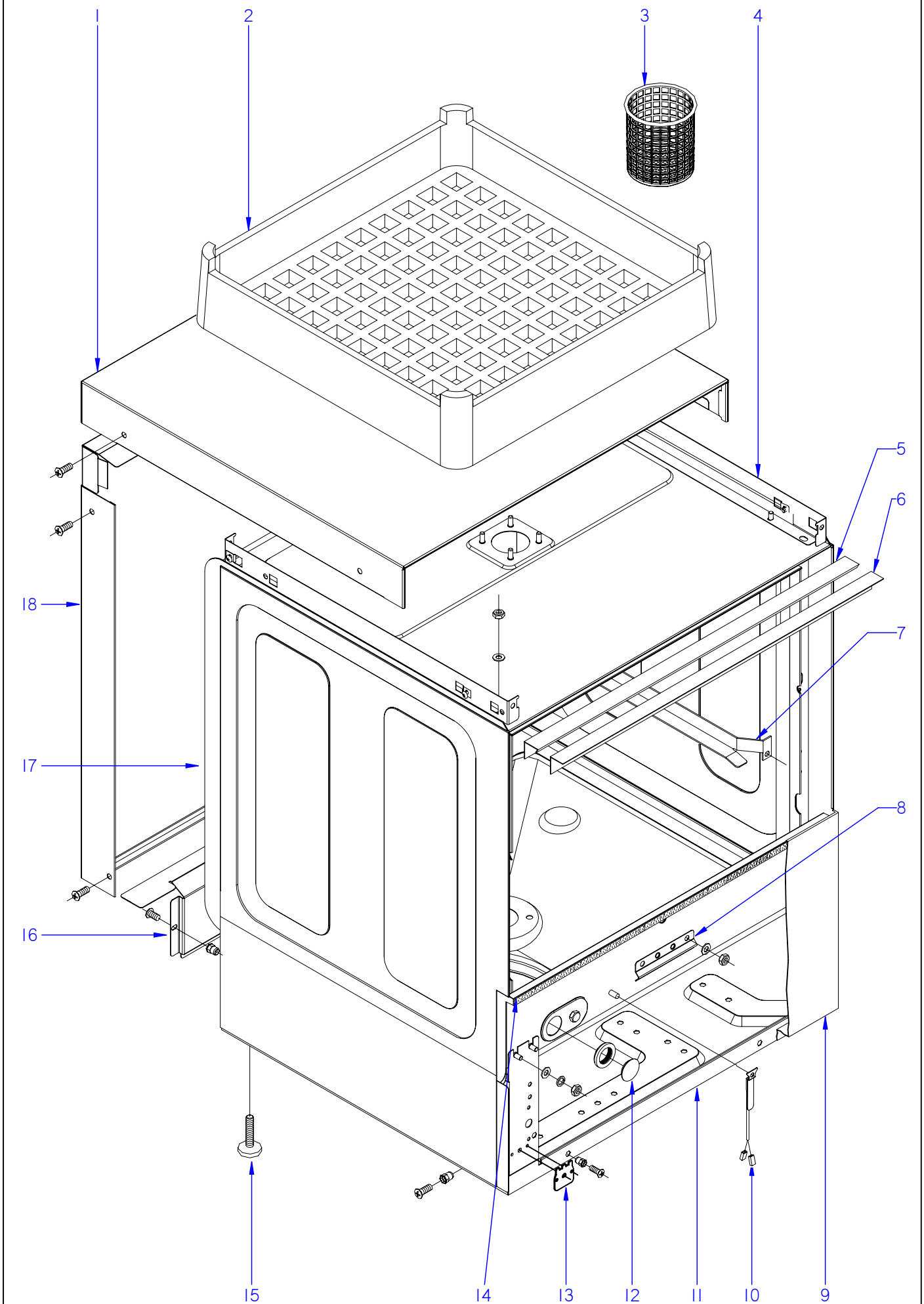


ITEM MARCADO EN COLOR = REPUESTO RECOMENDADO
COLOURED ITEM = RECOMMENDED SPARE PART

| N plano | Firma | Fecha | Aparato | MUEBLE | Lamina | |
|---|---|---|---|---|---|---|
| C-2452 | | 2009-12 | LAVAVASOS AD | | 1 | Fagor Industrial S.Coop. FAGOR Oñate |

| MOD. | LAVAVASOS | ZONA | MUEBLE / UNIT | PLANO | C-2452 |
|---|---|---|---|---|---|

| ITEM | CODIGO | DENOMINACION | TEXTO | AD-15 | AD-15 D | AD-21 | AD-21 B | AD-21 B DD | AD-21 D | AD-21 DD | | NOTAS |
|---|---|---|---|---|---|---|---|---|---|---|---|---|
| 1 | Z412907000 | TAPA AD-15 | COVER AD-15 | 1 | 1 | _ | _ | _ | _ | _ | | |
| 1 | Z442908000 | TAPA AD-21 | COVER AD-21 | _ | _ | 1 | 1 | 1 | 1 | 1 | | |
| 1 | Z442912000 | TAPA AD-21C | COVER AD-21C | _ | _ | _ | _ | _ | _ | _ | | |
| | Q152004000 | TORNILLO APLASTADO M5x13 A304 | FLAT HEADED BOLT M5x13 A304 | 8 | 8 | 8 | 8 | 8 | 8 | 8 | | |
| 2 | Z415320000 | CESTILLO LVC-12/15 | BASKET LVC-12/15 | 2 | 2 | _ | _ | _ | _ | _ | | |
| 2 | Z445320000 | CESTILLO LVC-21 | BASKET LVC-21 | _ | _ | 2 | 2 | 2 | 2 | 2 | | |
| 3 | Z605303000 | CESTILLO CUBIERTOS | CUTLERY BASKET | 1 | 1 | 1 | 1 | 1 | 1 | 1 | | |
| S/Nº | Z605302000 | SUPLEMENT. CESTILLOS LAVA.-12 | SUPPLEMENT. WASH BASKET.-1 | 1 | 1 | _ | _ | _ | _ | _ | | |
| S/N | Z625302000 | SUPLEMENT. PLATILLOS LAVAV.18 | SUPPLEMENT. GLASS WASHER | _ | _ | 1 | 1 | 1 | 1 | 1 | | |
| 4 | Z410309000 | ESCUADRA AMARRE TAPA 12-15 | FASTENING BRACKET COVER TA | 2 | 2 | _ | _ | _ | _ | _ | | ELIMINADO 26.03.10 |
| 4 | Z410317000 | ESCUADRA AMARRE TAPA 12-15 | FASTENING BRACKET COVER TA | 2 | 2 | _ | _ | _ | _ | _ | | INTRODUC. 26.03.10 |
| 4 | Z420318000 | ESCUADRA AMARRE TAPA 21 | COVER FASTENING BRACKET 21 | _ | _ | 2 | 2 | 2 | 2 | 2 | | ELIMINADO 29.01.10 |
| 4 | Z420319000 | ESCUADRA AMARRE TAPA 21 | COVER FASTENING BRACKET 21 | _ | _ | 2 | 2 | 2 | 2 | 2 | | INTRODUC. 29.01.10 |
| | Q162040000 | TUERCA EXAGONAL M6 | HEXAGONAL NUT M6 | 4 | 4 | 4 | 4 | 4 | 4 | 4 | | |
| | Q221012000 | TUERCA RAPIDA M,5 | RAPID NUT M,5 | 6 | 6 | 6 | 6 | 6 | 6 | 6 | | |
| 5 | Z400315000 | PERFIL CAJA | BOX PROFILE | 1 | 1 | _ | _ | _ | _ | _ | | |
| 5 | Z420315000 | PERFIL CAJA | BOX PROFILE | _ | _ | 1 | 1 | 1 | 1 | 1 | | |
| 6 | Z400306000 | ESCUADRA SUJECCION PERFIL | FASTENING BRACKET PROFILE | 1 | 1 | _ | _ | _ | _ | _ | | |
| 6 | Z420306000 | ESCUADRA SUJECCION PERFIL | FASTENING BRACKET PROFILE | _ | _ | 1 | 1 | 1 | 1 | 1 | | |
| | Q262040000 | ARANDELA GROW. A6 A.304 | WASHER GROW. A6 A.304 | 2 | 2 | 2 | 2 | 2 | 2 | 2 | | |
| | Q162040000 | TUERCA EXAGONAL M6 | HEXAGONAL NUT M6 | 2 | 2 | 2 | 2 | 2 | 2 | 2 | | |
| 7 | Z410304000 | GUIA CESTILLO DERECHA C12-15 | RIGHT BASKET GUIDE C12-15 | 1 | 1 | _ | _ | _ | _ | _ | | |
| 7 | Z440304000 | GUIA CESTILLO DERECHA | RIGHT BASKET GUIDE | _ | _ | 1 | 1 | 1 | 1 | 1 | | |
| S/Nº | Z410303000 | GUIA CESTILLO IZQUIERDA C12-15 | LEFT BASKET GUIDE C12-15 | 1 | 1 | _ | _ | _ | _ | _ | | |
| S/Nº | Z440303000 | GUIA CESTILLO IZQUIERDA | LEFT BASKET GUIDE | _ | _ | 1 | 1 | 1 | 1 | 1 | | |
| | Q162040000 | TUERCA EXAGONAL M6 | HEXAGONAL NUT M6 | 4 | 4 | 4 | 4 | 4 | 4 | 4 | | |
| 8 | Z748008000 | SOPORTE BULBO TERMOSTATO | THERMOSTAT BULB SUPPORT | _ | _ | _ | _ | 1 | _ | _ | | ELIMINADO 19.10.11 |
| | Q162040000 | TUERCA EXAGONAL M6 | HEXAGONAL NUT M6 | _ | _ | _ | _ | 1 | _ | _ | | ELIMINADO 19.10.11 |
| | Q262040000 | ARANDELA GROW. A6 A.304 | WASHER GROW. A6 A.304 | _ | _ | _ | _ | 1 | _ | _ | | ELIMINADO 19.10.11 |
| | | | | | | | | | | | | |
| | | | | | | | | | | | | |

| MOD. | LAVAVASOS | ZONA | MUEBLE / UNIT | PLANO | C-2452 |
|---|---|---|---|---|---|

| ITEM | CODIGO | DENOMINACION | TEXTO | AD-15 | AD-15 D | AD-21 | AD-21 B | AD-21 B DD | AD-21 D | AD-21 DD | | NOTAS |
|---|---|---|---|---|---|---|---|---|---|---|---|---|
| 9 | Z468611000 | PANEL FRONTAL10-12-14-15 NEU | FRONT PANEL10-12-14-15 NEU | 1 | 1 | _ | _ | _ | _ | _ | | |
| 9 | Z448611000 | PANEL FRONTAL C21 | FRONT PANEL C21 | _ | _ | 1 | _ | _ | 1 | 1 | | |
| 9 | Z458611000 | PANEL FRONTAL 21B | FRONT PANEL 21B | _ | _ | _ | 1 | 1 | _ | _ | | |
| 10 | Z713028000 | SONDA TEMPERATURA GICAR | TEMPERATURA PROBE GICAR | 1 | 1 | 1 | 1 | 1 | 1 | 1 | | |
| S/Nº | Z718004000 | AMARRE SONDA | PROBE CATCH | 1 | 1 | 1 | 1 | 1 | 1 | 1 | | ELIMINADO 24.09.12 |
| S/Nº | Z718004000 | AMARRE SONDA | PROBE CATCH | 2 | 2 | 2 | 2 | 2 | 2 | 2 | | INTRODUC. 24.09.12 |
| | Q162020000 | TUERCA EXAGONAL M4 | HEXAGONAL NUT M4 | 1 | 1 | 1 | 1 | 1 | 1 | 1 | | |
| 11 | Z468720000 | ARMAZON COMPLETO | COMPLETE FRAME | 1 | 1 | _ | _ | _ | _ | _ | | ELIMINAD. 06.10.12 |
| 11 | 12046711 | ARMAZON COMPLETO LVC-12 | COMPLETE FRAME LVC-12 | 1 | 1 | _ | _ | _ | _ | _ | | INTRODUC.06.10.12 |
| 11 | Z420101000 | ARMAZON COMPLETO | COMPLETE FRAME | _ | _ | 1 | 1 | 1 | 1 | 1 | | ELIMINAD. 06.10.12 |
| 11 | 12046707 | ARMAZON COMPLETO LVC-21 | COMPLETE FRAME LVC-21 | _ | _ | 1 | 1 | 1 | 1 | 1 | | INTRODUC.06.10.12 |
| 12 | P443060000 | TAPON | STOPPER | 1 | 1 | 1 | 1 | 1 | 1 | 1 | | |
| S/Nº | N503017000 | SOPORTE TERMOSTATO 1001713 | THERMOSTAT SUPPORT 100171 | 1 | 1 | 1 | 1 | 1 | 1 | 1 | | |
| 13 | Z713038000 | REGU. TERMOS. TANQUE 60 ºC | THERM.TANQUE REGULATOR | 1 | 1 | 1 | 1 | 1 | 1 | 1 | | ELIMINADO 30.11.12 |
| 13 | 12044848 | REGULADOR A 60ºC Tc DE 85ºC | REGULATOR 60ºC Tc DE 85ºC | 1 | 1 | 1 | 1 | 1 | 1 | 1 | | ELIMINADO 03.12.12 |
| 13 | 12022008 | REGU. TERMOS. TANQUE 60 ºC | THERM.TANQUE REGULATOR | 1 | 1 | 1 | 1 | 1 | 1 | 1 | | INTRODUC. 03.12.12 |
| 14 | Z400309000 | PERFIL INFERIOR CAJA | BOX LOWER PROFILE | 1 | 1 | _ | _ | _ | _ | _ | | |
| 14 | Z420309000 | PERFIL INFERIOR CAJA | BOX LOWER PROFILE | _ | _ | 1 | 1 | 1 | 1 | 1 | | |
| 15 | Z200107000 | PATA REGULABLE | ADJUSTABLE LEG | 4 | 4 | 4 | 4 | 4 | 4 | 4 | | |
| 16 | Z402908000 | PANEL POSTERIOR INFERIO. 1-4-2-5 | LOWER REAR PANEL. 1-4-2-5 | 1 | 1 | _ | _ | _ | _ | _ | | |
| 16 | Z422908000 | PANEL POSTERIOR INFERIOR 20-21 | LOWER REAR PANEL 20-21 | _ | _ | 1 | 1 | 1 | 1 | 1 | | |
| 17 | Z468730000 | CAJA SOLDADA | WELDED BOX | 1 | _ | _ | _ | _ | _ | _ | | |
| 17 | Z480311000 | CAJA SOLDADA LVC-15D | WELDED BOX LVC-15D | _ | 1 | _ | _ | _ | _ | _ | | |
| 17 | Z440313000 | CAJA SOLDADA AD-21 | WELDED BOX ADC-21 | _ | _ | 1 | _ | _ | _ | _ | | |
| 17 | Z440313000 | CAJA SOLDADA AD-21 | WELDED BOX ADC-21 | _ | _ | _ | 1 | 1 | _ | 1 | | ELIMINAD.19.02.10 |
| 17 | Z450301000 | CAJA SOLDADA AD-21 B, DD,C | WELDED BOX AD-21 B, DD,C | _ | _ | _ | 1 | 1 | _ | 1 | | INTRODUC.19.02.10 |
| 17 | Z500311000 | CAJA SOLDADA LVC-21D | WELDED BOX LVC-21D | _ | _ | _ | _ | _ | 1 | _ | | |
| | Q162040000 | TUERCA EXAGONAL M6 | HEXAGONAL NUT M6 | 8 | 8 | 8 | 8 | 8 | 8 | 8 | | |
| | Q262040000 | ARANDELA GROW. A6 A.304 | WASHER GROW. A6 A.304 | 8 | 8 | 8 | 8 | 8 | 8 | 8 | | |
| 18 | Z402902000 | PANEL POSTERIOR A R-10 C-12 | REAR PANEL A R-10 C-12 | 1 | 1 | _ | _ | _ | _ | _ | | |
| 18 | Z422902000 | PANEL POSTERIOR R20-C21 | REAR PANEL R20-C21 | _ | _ | 1 | 1 | 1 | 1 | 1 | | |

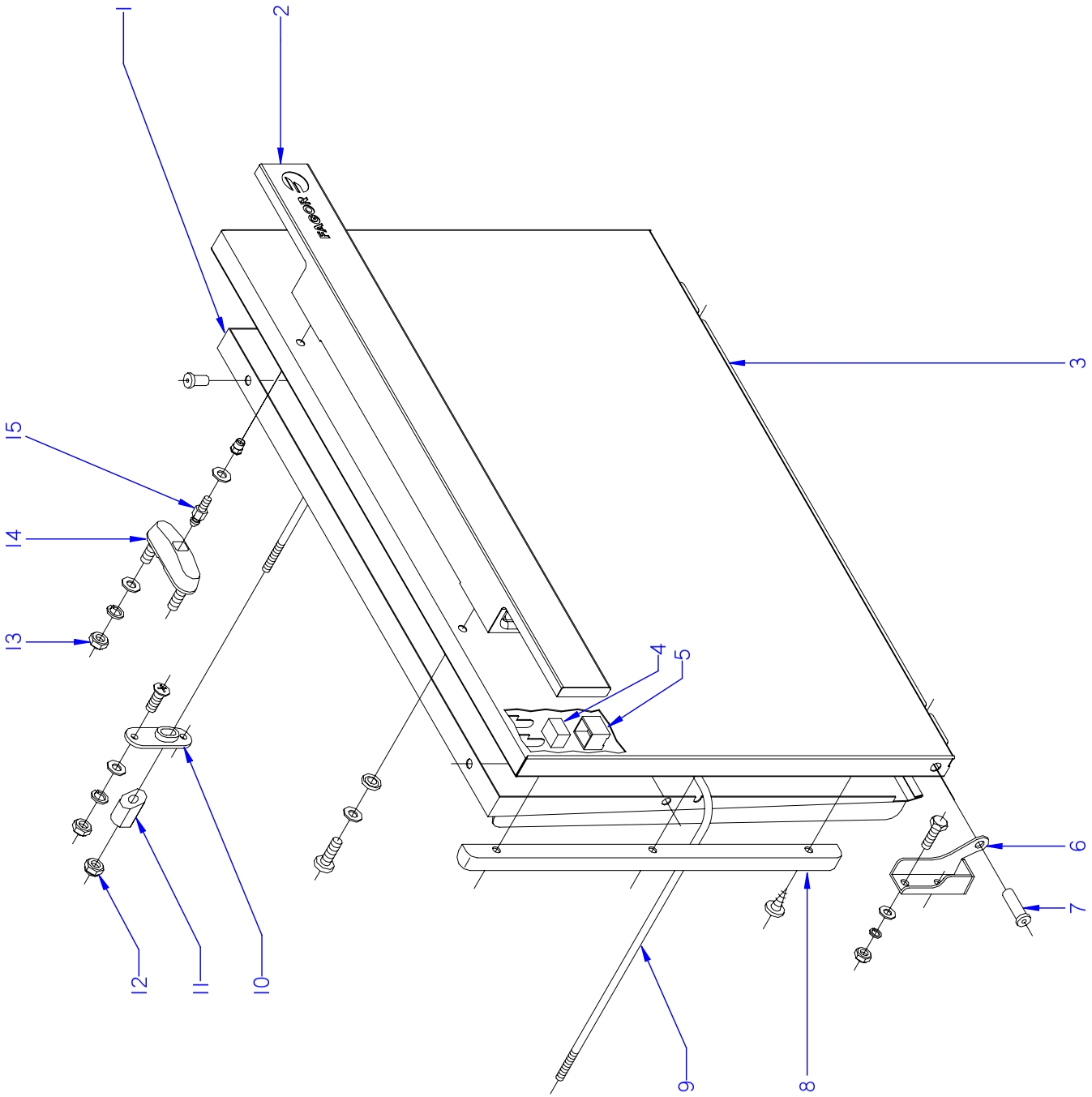


ITEM MARCADO EN COLOR = REPUESTO RECOMENDADO
COLOURED ITEM = RECOMMENDED SPARE PART

| N plano | Firma | Fecha | Aparato | | Lamina | |
|---|---|---|---|---|---|---|
| C-2453 | | 2009-12 | PUERTA | LAVAVASOS AD | 2 | Fagor Industrial S.Coop. Oñate FAGOR |

| MOD. | LAVAVASOS | ZONA | PUERTA / DOOR | PLANO | C-2453 |
|---|---|---|---|---|---|

| ITEM | CODIGO | DENOMINACION | TEXTO | AD-15 | AD-15 D | AD-21 | AD-21 B | AD-21 B DD | AD-21 D | AD-21 DD | | NOTAS |
|---|---|---|---|---|---|---|---|---|---|---|---|---|
| | **12092605** | **KIT PUERTA AD-21** | **DOOR KIT AD-21** | _ | _ | **1** | **1** | **1** | **1** | **1** | | |
| 1 | Z400511000 | CONTRAPUERTA COMPLETA | COMPL. DOOR REVERSE | 1 | 1 | _ | _ | _ | _ | _ | | |
| 1 | Z420513000 | CONTRAPUERTA COMPL. R20-C21 | COMPL. DOOR REVERSE R20-C2 | _ | _ | 1 | 1 | 1 | 1 | 1 | | |
| | Q412000000 | REMACHE TUBULAR 4 x 8 | TUBULAR RIVET 4 x 8 | 4 | 4 | 4 | 4 | 4 | 4 | 4 | | |
| 2 | Z460501000 | ASA AD-12 | HANDLE AD-12 | 1 | 1 | _ | _ | _ | _ | _ | | ELIMINADO 31.03.10 |
| 2 | Z460503000 | ASA AD-15 | HANDLE AD-15 | 1 | 1 | _ | _ | _ | _ | _ | | INTRODUC. 31.03.10 |
| 2 | Z440501000 | ASA AD-21 | HANDLE AD-21 | _ | _ | 1 | 1 | 1 | 1 | 1 | | ELIMINADO 31.03.10 |
| 2 | Z440505000 | ASA AD-21 | HANDLE AD-21 | _ | _ | 1 | 1 | 1 | 1 | 1 | | INTRODUC. 31.03.10 |
| S/Nº | Z200564000 | TACO SUJECCION | FASTENING RAWL | 2 | 2 | 2 | 2 | 2 | 2 | 2 | | ELIMINADO 15.02.11 |
| S/Nº | Z210503000 | TACO SUJECCION | FASTENING RAWL | 2 | 2 | 2 | 2 | 2 | 2 | 2 | | INTRODUC. 15.02.11 |
| | Q012045000 | TORNILLO EXAGONAL M6X30 | HEXAGONAL BOLT M6x30 | 2 | 2 | 2 | 2 | 2 | 2 | 2 | | |
| | Q262040000 | ARANDELAGROW. A6 A.304 | WASHER GROW. A6 A.304 | 2 | 2 | 2 | 2 | 2 | 2 | 2 | | |
| 3 | Z410502000 | PUERTA COMPLETA AD-15 | COMPLETE DOOR AD-15 | 1 | 1 | _ | _ | _ | _ | _ | | |
| 3 | Z440504000 | PUERTA COMPLETA AD-21 | COMPLETE DOOR AD-21 | _ | _ | 1 | 1 | 1 | 1 | 1 | | |
| S/Nº | Z206135000 | CHECK LIST LAVAVAJILLAS FAGOR | CHECK LIST | 1 | 1 | 1 | 1 | 1 | 1 | 1 | | INTRODUC. 19.07.10 |
| 4 | Z200506000 | IMAN | MAGNET | 1 | 1 | 1 | 1 | 1 | 1 | 1 | | |
| 5 | Z200507000 | PROTECTOR IMAN | MAGNET PROTECTOR | 1 | 1 | 1 | 1 | 1 | 1 | 1 | | |
| 6 | Z400514000 | BISAGRA IZQUIERDA T-C. | LEFT HINGE T-C. | 1 | 1 | 1 | 1 | 1 | 1 | 1 | | |
| S/Nº | Z400515000 | BISAGRA DERECHA T-C. | RIGHT HINGE T-C. | 1 | 1 | 1 | 1 | 1 | 1 | 1 | | |
| | Q012042000 | TORNILLO EXAGONAL M6X15 | HEXAGONAL BOLT M6x15 | 4 | 4 | 4 | 4 | 4 | 4 | 4 | | |
| | Q232040000 | ARANDELA A6 | WASHER A6 | 4 | 4 | 4 | 4 | 4 | 4 | 4 | | |
| | Q262040000 | ARANDELAGROW. A6 A.304 | WASHER GROW. A6 A.304 | 4 | 4 | 4 | 4 | 4 | 4 | 4 | | |
| | Q162040000 | TUERCA EXAGONAL M6 | HEXAGONAL NUT M6 | 4 | 4 | 4 | 4 | 4 | 4 | 4 | | |
| 7 | Z400516000 | EJE PUERTA | DOOR SHAFT | 2 | 2 | 2 | 2 | 2 | 2 | 2 | | |
| 8 | Z400522000 | GUIA IZQUIERDA | LEFT GUIDE | 1 | 1 | _ | _ | _ | _ | _ | | |
| 8 | Z420522000 | GUIA IZQUIERDA | LEFT GUIDE | _ | _ | 1 | 1 | 1 | 1 | 1 | | |
| S/Nº | Z400521000 | GUIA DERECHA | RIGHT GUIDE | 1 | 1 | _ | _ | _ | _ | _ | | |
| S/Nº | Z420521000 | GUIA DERECHA | RIGHT GUIDE | _ | _ | 1 | 1 | 1 | 1 | 1 | | |
| | Q412000000 | REMACHE TUBULAR 4 x 8 | TUBULAR RIVET 4 x 8 | 4 | 4 | 4 | 4 | 4 | 4 | 4 | | |
| 9 | Z420519000 | VARILLA TENSOR | TIGHTENER ROD | _ | _ | 1 | 1 | 1 | 1 | 1 | | |
| | | | | | | | | | | | | |

| MOD. | LAVAVASOS | ZONA | PUERTA / DOOR | PLANO | C-2453 |
|---|---|---|---|---|---|

| ITEM | CODIGO | DENOMINACION | TEXTO | AD-15 | AD-15 D | AD-21 | AD-21 B | AD-21 B DD | AD-21 D | AD-21 DD | | NOTAS |
|---|---|---|---|---|---|---|---|---|---|---|---|---|
| 10 | Z200310000 | SOPORTE TENSOR | TIGHTENER SUPPOR | _ | _ | 2 | 2 | 2 | 2 | 2 | | |
| 11 | Z200522000 | TENSOR PUERTA | TIGHTENER DOOR | _ | _ | 2 | 2 | 2 | 2 | 2 | | |
| 12 | Q222012000 | TUERCA AUTOB. M6 | SELF-LOCKING NUT M6 | _ | _ | 2 | 2 | 2 | 2 | 2 | | |
| 13 | Q222012000 | TUERCA AUTOB. M6 | SELF-LOCKING NUT M6 | 2 | 2 | 2 | 2 | 2 | 2 | 2 | | |
| 14 | Z200607000 | CONJUNTO CIERRE PUER.T-CO | LOCK UNIT PUERTAT-CO | 1 | 1 | 1 | 1 | 1 | 1 | 1 | | |
| 15 | Z200601000 | ENGANCHE CIERRE | LOCK LATCH | 1 | 1 | 1 | 1 | 1 | 1 | 1 | | |
| | Q232030000 | ARANDELA A5 | WASHER A5 | 1 | 1 | 1 | 1 | 1 | 1 | 1 | | |

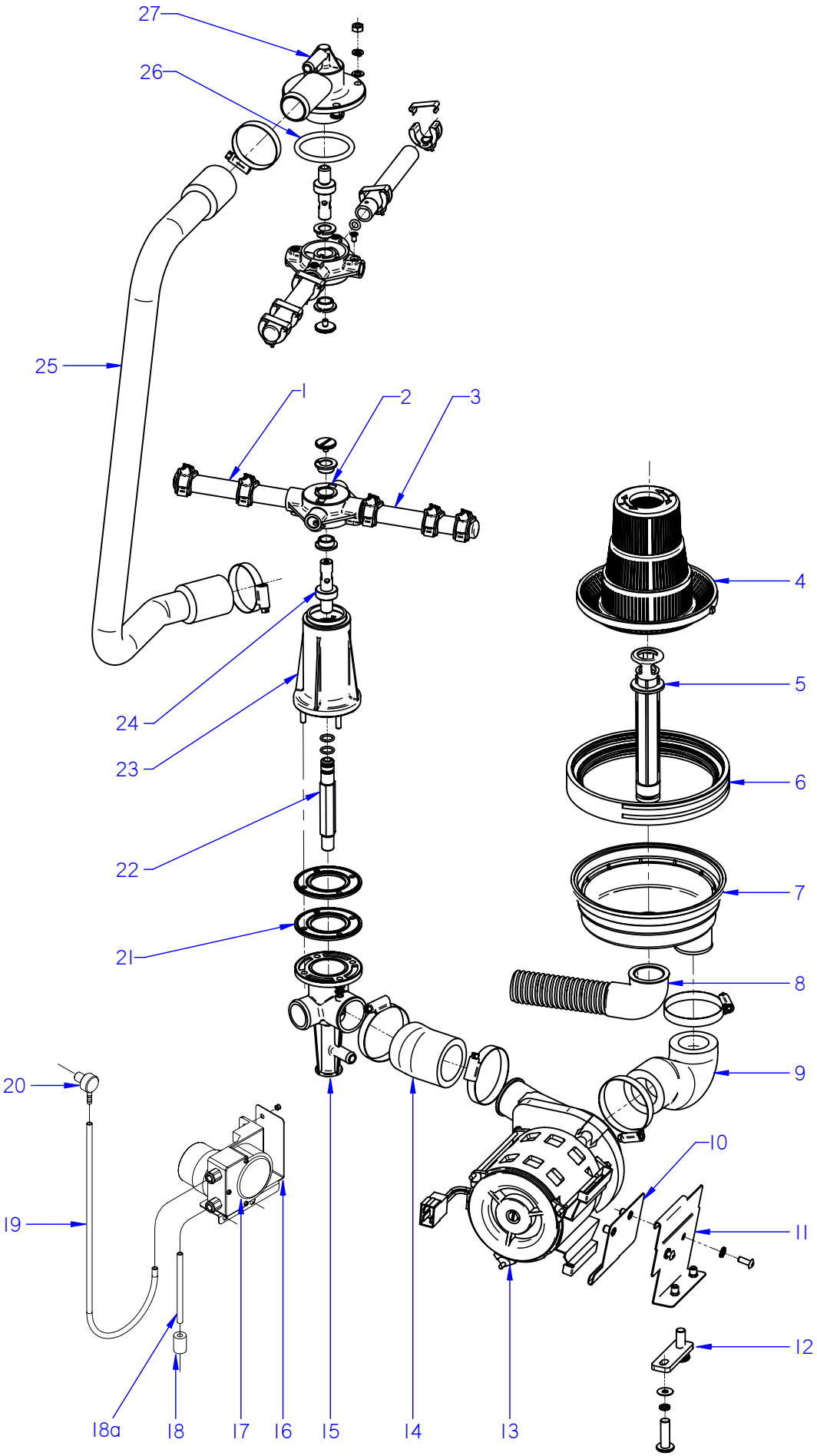


ITEM MARCADO EN COLOR = REPUESTO RECOMENDADO
COLOURED ITEM = RECOMMENDED SPARE PART

| N plano | Firma | Fecha | Aparato | CONJUNTO FUNCIONAL LAVADO | Lamina | |
|---|---|---|---|---|---|---|
| C-2454 | | 2009-12 | LAVAVAS. AD-15; 15D; 21; 21D; 21DD | | 3 | Fagor Industrial S.Coop. FAGOR Onate |

| MOD. | LAVAVASOS | ZONA | CONJUNTO FUNCIONAL LAVADO | PLANO | C-2454 |
|---|---|---|---|---|---|

| ITEM | CODIGO | DENOMINACION | TEXTO | AD-15 | AD-15 D | AD-21 | AD-21 D | AD-21 DD | | | NOTAS |
|---|---|---|---|---|---|---|---|---|---|---|---|
| 1 | Z460701000 | RAMA LAVADO B | WASH B BRANCH | 2 | 2 | _ | _ | _ | | | |
| 1 | Z440707000 | RAMA LAVADO B | WASH B BRANCH | _ | _ | 2 | 2 | 2 | | | |
| | Z400709000 | TOBERA LAVADO | WASH NOZZLE | 5 | 5 | 6 | 6 | 6 | | | |
| | Z400711000 | ENGANCHE TOBERA LAVADO | WASH NOZZLE CATCH | 5 | 5 | 6 | 6 | 6 | | | |
| 2 | Z410704000 | CRUCETA | CROSSPIECE | 2 | 2 | 2 | 2 | 2 | | | |
| | Q152016000 | TORNILLO ESPECIAL M.5X0.8 | SPECIAL BOLT M.5X0.8 | 2 | 2 | 2 | 2 | 2 | | | |
| | Z410705000 | CASQUILLO CRUCETA | CROSSPIECE BUSHING | 4 | 4 | 4 | 4 | 4 | | | |
| 3 | Z460702000 | RAMA LAVADO A | WASH BRANCH A | 2 | 2 | _ | _ | _ | | | |
| 3 | Z440706000 | RAMA LAVADO A | WASH BRANCH A | _ | _ | 2 | 2 | 2 | | | |
| | Z400709000 | TOBERA LAVADO | WASH NOZZLE | 5 | 5 | 6 | 6 | 6 | | | |
| | Z400711000 | ENGANCHE TOBERA LAVADO | WASH NOZZLE CATCH | 5 | 5 | 6 | 6 | 6 | | | |
| 4 | Z400920000 | FILTRO ALTO | HIGH FILTER | 1 | 1 | 1 | 1 | 1 | | | |
| 5 | Z400907000 | ALIVIADERO | OVERFLOW | 1 | 1 | 1 | 1 | 1 | | | |
| S/Nº | 12010282 | JUNTA TORICA 25.4X20.2X2.6 | O-RING 25.4X20.2X2.6 | 1 | 1 | 1 | 1 | 1 | | | |
| 6 | Z400902000 | JUNTA CUBETA | TRAY SEAL | 1 | 1 | 1 | 1 | 1 | | | |
| 7 | Z400901000 | CUBETA | TRAY | 1 | 1 | 1 | 1 | 1 | | | |
| | Z400903000 | ABRAZADERA CUBETA | TRAY CLAMP | 1 | 1 | 1 | 1 | 1 | | | |
| 8 | Z400908000 | MANGUERA DESAGÜE | DRAINAGE HOSE | 1 | 1 | 1 | 1 | 1 | | | |
| | Q901307000 | ABRAZADERA ELASTICA 37.7-39.7 | ELASTIC CLAMP 37.7-39.7 | 1 | 1 | 1 | 1 | 1 | | | |
| 9 | Z400905000 | CODO ASPIRACION 1003115 | EXTRACTOR ELBOW 1003115 | 1 | 1 | 1 | 1 | 1 | | | |
| | Q881307000 | ABRAZADERA 40-60 | CLAMP 40-60 | 2 | 2 | 2 | 2 | 2 | | | |
| 10 | Z401004000 | AMARRE MOTOBOMBA | MOTORPUMP FASTENING | 1 | 1 | 1 | 1 | 1 | | | |
| 11 | Z401002000 | SOPORTE MOTOBOMBA | MOTOR PUMP SUPPORT | 1 | 1 | _ | _ | _ | | | |
| 11 | Z421002000 | SOPORTE MOTOBOMBA | MOTOR PUMP SUPPORT | _ | _ | 1 | 1 | 1 | | | |
| | Q152004000 | TORNILLO APLASTADO M5x13 A304 | FLAT HEADED BOLT M5x13 A304 | 2 | 2 | 2 | 2 | 2 | | | |
| | Q242030000 | ARANDELA ABANICO A5 A.304 | FAN WASHER A5 A.304 | 2 | 2 | 2 | 2 | 2 | | | |
| 12 | Z401006000 | PERFIL AMORTIGUADOR | SHOCK ABSORBER PROFILE | 1 | 1 | 1 | 1 | 1 | | | |
| | Q302022000 | ARANDELA 16x6x1,2 A304 | WASHER 16x6x1.2 A304 | 2 | 2 | 2 | 2 | 2 | | | |
| | Q032032000 | TORNILLO ALOMADO M5X15 | CURVED SCREW M5X15 | 2 | 2 | 2 | 2 | 2 | | | |
| 13 | Z401001000 | BOMBA LAVADO | WASH PUMP | 1 | 1 | 1 | 1 | 1 | | | |
| | Z401001100 | TURBINA BOMBA Z401001 | TURBINE PUMP Z401001 | 1 | 1 | 1 | 1 | 1 | | | |

| MOD. | LAVAVASOS | ZONA | CONJUNTO FUNCIONAL LAVADO | PLANO | C-2454 |
|---|---|---|---|---|---|

| ITEM | CODIGO | DENOMINACION | TEXTO | AD-15 | AD-15 D | AD-21 | AD-21 D | AD-21 DD | | | NOTAS |
|---|---|---|---|---|---|---|---|---|---|---|---|
| 14 | Z400906000 | CODO IMPULSION 1003116 | IMPULSE ELBOW 1003116 | 1 | 1 | 1 | 1 | 1 | | | |
| | Q881307000 | ABRAZADERA 40-60 | CLAMP 40-60 | 2 | 2 | 2 | 2 | 2 | | | |
| 15 | Z410702000 | PASAMUROS CESTO CUADRADO | SQUARE BASKET WALL BUSHIN | 1 | 1 | 1 | 1 | 1 | | | |
| | Q232030000 | ARANDELA A5 | WASHER A5 | 4 | 4 | 4 | 4 | 4 | | | |
| | Q262030000 | ARANDELA GROW. A5 A.304 | WASHER GROW. A5 A.304 | 4 | 4 | 4 | 4 | 4 | | | |
| | Q162030000 | TUERCA EXAGONAL M5 | HEXAGONAL NUT M5 | 4 | 4 | 4 | 4 | 4 | | | |
| 16 | Z208909000 | SOPORTE DOSIF. DETERGENTE | DETERGENT DISP. SUPPORT | _ | _ | _ | _ | 1 | | | |
| | Q419005000 | REMACHE 4X8 ALMG3 / ALUMINIO | RIVET 4X8 ALMG3 / ALUMINIUM | _ | _ | _ | _ | 2 | | | |
| 17 | Z208903000 | DOSIFIC. DGTE REGULABLE G300 | DETERGENT DISP. ADJUST. G30 | _ | _ | _ | _ | 1 | | | |
| | Q012031000 | TORNIL.EXAGONAL M5X10 A.304 | HEX BOLT M5X10 A.304 | _ | _ | _ | _ | 2 | | | |
| | Q232030000 | ARANDELA A5 | WASHER A5 | _ | _ | _ | _ | 2 | | | |
| 18 | Z701152000 | PESO FILTRO | FILTER WEIGHT | _ | _ | _ | _ | 1 | | | |
| 18a | Z448614000 | CONDUCTO ASPIRACIÓN | EXTRACTOR PIPE | _ | _ | _ | _ | 1 | | | |
| 19 | 3699300000 | CONDUCTO DOSIF. TRANSPARENT | TRANSPAR. EXTRACTOR PIPE | _ | _ | _ | _ | 1 | | | |
| 20 | Z230905000 | PASAMUROS INOX DETERGENTE | INOX DETERGENT WALL BUSHIN | _ | _ | _ | _ | 1 | | | ELIMINADO 30.11.10 |
| 20 | Z208927000 | PASAMUROS INOX DETERGENTE | INOX DETERGENT WALL BUSHIN | _ | _ | _ | _ | 1 | | | INTRODUCIDO 30.11.10 |
| 21 | Z400703000 | JUNTA ESTANQUE. 1003113 | SEAL. 1003113 | 2 | 2 | 2 | 2 | 2 | | | |
| 22 | Z410712000 | EMPALME ACLARADO | RINSE CONNECTION | 1 | 1 | 1 | 1 | 1 | | | |
| | Q307056000 | JUNTA TORICA 10,82x14,38x1,78 | O-RING 10.82x14.38x1.78 | 2 | 2 | 2 | 2 | 2 | | | |
| 23 | Z410701000 | SOPORTE INFERIOR CUADRO | LOWER SUPPORT BRACKET | 1 | 1 | 1 | 1 | 1 | | | |
| 24 | Z410708000 | EJE | SHAFT | 2 | 2 | 2 | 2 | 2 | | | |
| 25 | Z410711000 | ARBOL LAVADO | WASH CAM | 1 | 1 | _ | _ | _ | | | |
| 25 | Z440711000 | ARBOL LAVADO | WASH CAM | _ | _ | 1 | 1 | 1 | | | |
| | Q881306000 | ABRAZADERA 32-50L | CLAMP 32-50L | 2 | 2 | 2 | 2 | 2 | | | |
| 26 | Q307052000 | JUNTA TORICA 50,17X60,83X5,3 | O-RING 50.17X60.83X5.3 | 1 | 1 | 1 | 1 | 1 | | | |
| 27 | Z410703000 | SOPORTE DISTRIB. SUPERIOR | UPPER DISTRIB. SUPPORT | 1 | 1 | 1 | 1 | 1 | | | |
| | Q232040000 | ARANDELA A6 | WASHER A6 | 4 | 4 | 4 | 4 | 4 | | | |
| | Q262040000 | ARANDELA GROW. A6 A.304 | WASHER GROW. A6 A.304 | 4 | 4 | 4 | 4 | 4 | | | |
| | Q162040000 | TUERCA EXAGONAL M6 | HEXAGONAL NUT M6 | 4 | 4 | 4 | 4 | 4 | | | |
| | | | | | | | | | | | |
| | | | | | | | | | | | |

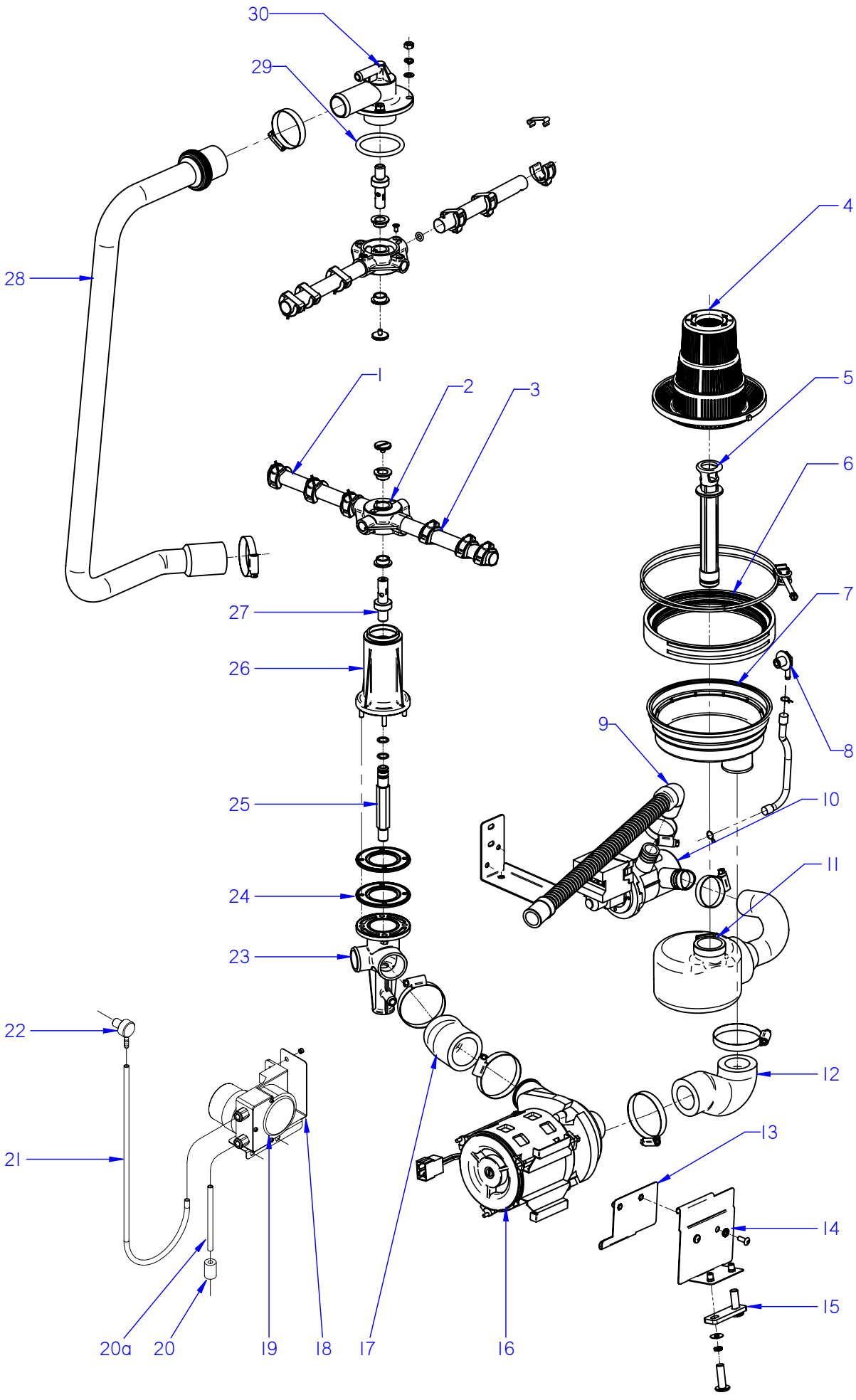


ITEM MARCADO EN COLOR = REPUESTO RECOMENDADO
COLOURED ITEM = RECOMMENDED SPARE PART

| N plano | Firma | Fecha | Aparato | CONJUNTO FUNCIONAL LAVADO | Lamina | |
|---|---|---|---|---|---|---|
| C-2455 | | 2009-12 | LAVAVAS. AD-21B ; AD-21B DD | | 4 | Fagor Industrial S.Coop. FAGOR Oñate |

| MOD. | LAVAVASOS | ZONA | CONJUNTO FUNCIONAL LAVADO | PLANO | C-2455 |
|---|---|---|---|---|---|

| ITEM | CODIGO | DENOMINACION | TEXTO | AD-21 B | AD-21 B DD | | | | | | NOTAS |
|---|---|---|---|---|---|---|---|---|---|---|---|
| 1 | Z440707000 | RAMA LAVADO B | WASH B BRANCH | 2 | 2 | | | | | | |
| S/Nº | Z400709000 | TOBERA LAVADO | WASH NOZZLE | 12 | 12 | | | | | | |
| S/Nº | Z400711000 | ENGANCHE TOBERA LAVADO | WASH NOZZLE CATCH | 12 | 12 | | | | | | |
| 2 | Z410704000 | CRUCETA | CROSSPIECE | 2 | 2 | | | | | | |
| | Q152016000 | TORNILLO ESPECIAL M.5X0.8 | SPECIAL BOLT M.5X0.8 | 2 | 2 | | | | | | |
| | Z410705000 | CASQUILLO CRUCETA | CROSSPIECE BUSHING | 4 | 4 | | | | | | |
| 3 | Z440706000 | RAMA LAVADO A | WASH BRANCH A | 2 | 2 | | | | | | |
| 4 | Z400920000 | FILTRO ALTO | HIGH FILTER | 1 | 1 | | | | | | |
| 5 | Z400907000 | ALIVIADERO | OVERFLOW | 1 | 1 | | | | | | ELIMINADO 24.06.2013 |
| 5 | 12047160 | ALIVIADERO LVS MOD. B | OVERFLOW LVS MOD. B | 1 | 1 | | | | | | INTRODUCIDO 24.06.2013 |
| S/Nº | 12010282 | JUNTA TORICA 25.4X20.2X2.6 | O-RING 25.4X20.2X2.6 | 1 | 1 | | | | | | |
| 6 | Z400902000 | JUNTA CUBETA | TRAY SEAL | 1 | 1 | | | | | | |
| 7 | Z400901000 | CUBETA | TRAY | 1 | 1 | | | | | | |
| | Z400903000 | ABRAZADERA CUBETA | TRAY CLAMP | 1 | 1 | | | | | | |
| 8 | Z230905000 | PASAMUROS INOX DETERGENTE | INOX DETERGENT WALL BUSHIN | 1 | 1 | | | | | | |
| | P102154000 | BRIDA ELASTICA TUBO | ELASTIC PIPE FLANGE | 2 | 2 | | | | | | |
| | 3702400000 | TUBO GOMA NEGRO D 8*4 | BLACK RUBBER PIPE Ø 8*4 | 1 | 1 | | | | | | |
| 9 | Z220903000 | MANGUERA DESAGÜE | DRAINAGE HOSE | 1 | 1 | | | | | | |
| | Q901307000 | ABRAZADERA ELASTICA 37.7-39.7 | ELASTIC CLAMP 37.7-39.7 | 1 | 1 | | | | | | |
| 10 | Z220901000 | BOMBA DESAGUE 30W | DRAINAGE PUMP 30W | 1 | 1 | | | | | | |
| 10 | Z223501000 | BOMBA DE DESAGUE 30W 60HZ | DRAINAGE PUMP 30W 60HZ | 1 | 1 | | | | | | |
| | Z430902000 | SOPORTE BOMBA DESAGUE B | DRAINAGE PUMP SUPPORT B | 1 | 1 | | | | | | |
| | Q012031000 | TORNILLO EXAGONAL M5X10 | HEXAGONAL BOLT M5x10 | 2 | 2 | | | | | | |
| | Q242030000 | ARANDELA ABANICO A5 A.304 | FAN WASHER A5 A.304 | 2 | 2 | | | | | | |
| 11 | Z430901000 | ACUMULADOR 1503114 | ACCUMULATOR 1503114 | 1 | 1 | | | | | | |
| | Q901307000 | ABRAZADERA ELASTICA 37.7-39.7 | ELASTIC CLAMP 37.7-39.7 | 1 | 1 | | | | | | |
| 12 | Z400905000 | CODO ASPIRACION 1003115 | EXTRACTOR ELBOW 1003115 | 1 | 1 | | | | | | |
| | Q881307000 | ABRAZADERA 40-60 | CLAMP 40-60 | 2 | 2 | | | | | | |
| 13 | Z401004000 | AMARRE MOTOBOMBA | MOTORPUMP FASTENING | 1 | 1 | | | | | | |
| 14 | Z421002000 | SOPORTE MOTOBOMBA | MOTOR PUMP SUPPORT | 1 | 1 | | | | | | |
| | Q152004000 | TORNILLO APLASTADO M5x13 A304 | FLAT HEADED BOLT M5x13 A304 | 2 | 2 | | | | | | |

| MOD. | LAVAVASOS | ZONA | CONJUNTO FUNCIONAL LAVADO | PLANO | C-2455 |
|---|---|---|---|---|---|

| ITEM | CODIGO | DENOMINACION | TEXTO | AD-21 B | AD-21 B DD | | | | | | NOTAS |
|---|---|---|---|---|---|---|---|---|---|---|---|
| 15 | Z401006000 | PERFIL AMORTIGUADOR | SHOCK ABSORBER PROFILE | 1 | 1 | | | | | | |
| | Q242030000 | ARANDELA ABANICO A5 A.304 | FAN WASHER A5 A.304 | 2 | 2 | | | | | | |
| | Q302022000 | ARANDELA 16x6x1,2 A304 | WASHER 16x6x1.2 A304 | 2 | 2 | | | | | | |
| | Q032032000 | TORNILLO ALOMADO M5X15 | CURVED SCREW M5X15 | 2 | 2 | | | | | | |
| 16 | Z401001000 | BOMBA LAVADO | WASH PUMP | 1 | 1 | | | | | | |
| | Z401001100 | TURBINA BOMBA Z401001 | TURBINE PUMP Z401001 | 1 | 1 | | | | | | |
| 17 | Z400906000 | CODO IMPULSION 1003116 | IMPULSE ELBOW 1003116 | 1 | 1 | | | | | | |
| | Q881307000 | ABRAZADERA 40-60 | CLAMP 40-60 | 2 | 2 | | | | | | |
| 18 | Z208909000 | SOPORTE DOSIF. DETERGENTE | DETERGENT DISP. SUPPORT | _ | 1 | | | | | | |
| | Q419005000 | REMACHE 4X8 ALMG3 / ALUMINIO | RIVET 4X8 ALMG3 / ALUMINIUM | _ | 2 | | | | | | |
| 19 | Z208903000 | DOSIFIC. DGTE REGULABLE G300 | DETERGENT DISP. ADJUST. G30 | _ | 1 | | | | | | |
| | Q012031000 | TORNIL.EXAGONAL M5X10 A.304 | HEX BOLT M5X10 A.304 | _ | 2 | | | | | | |
| | Q232030000 | ARANDELA A5 | WASHER A5 | _ | 2 | | | | | | |
| 20 | Z701152000 | PESO FILTRO | FILTER WEIGHT | _ | 1 | | | | | | |
| 20a | Z448614000 | CONDUCTO ASPIRACIÓN | EXTRACTOR PIPE | _ | 1 | | | | | | |
| 21 | 3699300000 | CONDUCTO DOSIF. TRANSPARENT | TRANSPAR. EXTRACTOR PIPE | _ | 1 | | | | | | |
| 22 | Z230905000 | PASAMUROS INOX DETERGENTE | INOX DETERGENT WALL BUSHIN | _ | 1 | | | | | | ELIMINADO 30.11.10 |
| 22 | Z208927000 | PASAMUROS INOX DETERGENTE | INOX DETERGENT WALL BUSHIN | _ | 1 | | | | | | INTRODUCIDO 30.11.10 |
| S/Nº | Z208904000 | CABLEADO DOSIFICADOR DTGTE. | DETERGENT DISP. WIRING | _ | 1 | | | | | | |
| 23 | Z410702000 | PASAMUROS CESTO CUADRADO | SQUARE BASKET WALL BUSHIN | 1 | 1 | | | | | | |
| | Q232030000 | ARANDELA A5 | WASHER A5 | 4 | 4 | | | | | | |
| | Q262030000 | ARANDELA GROW. A5 A.304 | WASHER GROW. A5 A.304 | 4 | 4 | | | | | | |
| | Q162030000 | TUERCA EXAGONAL M5 | HEXAGONAL NUT M5 | 4 | 4 | | | | | | |
| 24 | Z400703000 | JUNTA ESTANQUE. 1003113 | SEAL. 1003113 | 2 | 2 | | | | | | |
| 25 | Z410712000 | EMPALME ACLARADO | RINSE CONNECTION | 1 | 1 | | | | | | |
| | Q307056000 | JUNTA TORICA 10,82x14,38x1,78 | O-RING 10.82x14.38x1.78 | 2 | 2 | | | | | | |
| 26 | Z410701000 | SOPORTE INFERIOR CUADRO | LOWER SUPPORT BRACKET | 1 | 1 | | | | | | |
| 27 | Z410708000 | EJE | SHAFT | 2 | 2 | | | | | | |
| 28 | Z440711000 | ARBOL LAVADO | WASH CAM | 1 | 1 | | | | | | |
| | Q881306000 | ABRAZADERA 32-50L | CLAMP 32-50L | 2 | 2 | | | | | | |
| 29 | Q307052000 | JUNTA TORICA 50,17X60,83X5,3 | O-RING 50.17X60.83X5.3 | 1 | 1 | | | | | | |

| MOD. | LAVAVASOS | ZONA | CONJUNTO FUNCIONAL LAVADO | PLANO | C-2455 |
|---|---|---|---|---|---|

| ITEM | CODIGO | DENOMINACION | TEXTO | AD-21 B | AD-21 B DD | | | | | | NOTAS |
|---|---|---|---|---|---|---|---|---|---|---|---|
| 30 | Z410703000 | SOPORTE DISTRIB. SUPERIOR | UPPER DISTRIB. SUPPORT | 1 | 1 | | | | | | |
| | Q232040000 | ARANDELA A6 | WASHER A6 | 4 | 4 | | | | | | |
| | Q262040000 | ARANDELA GROW. A6 A.304 | WASHER GROW. A6 A.304 | 4 | 4 | | | | | | |
| | Q162040000 | TUERCA EXAGONAL M6 | HEXAGONAL NUT M6 | 4 | 4 | | | | | | |

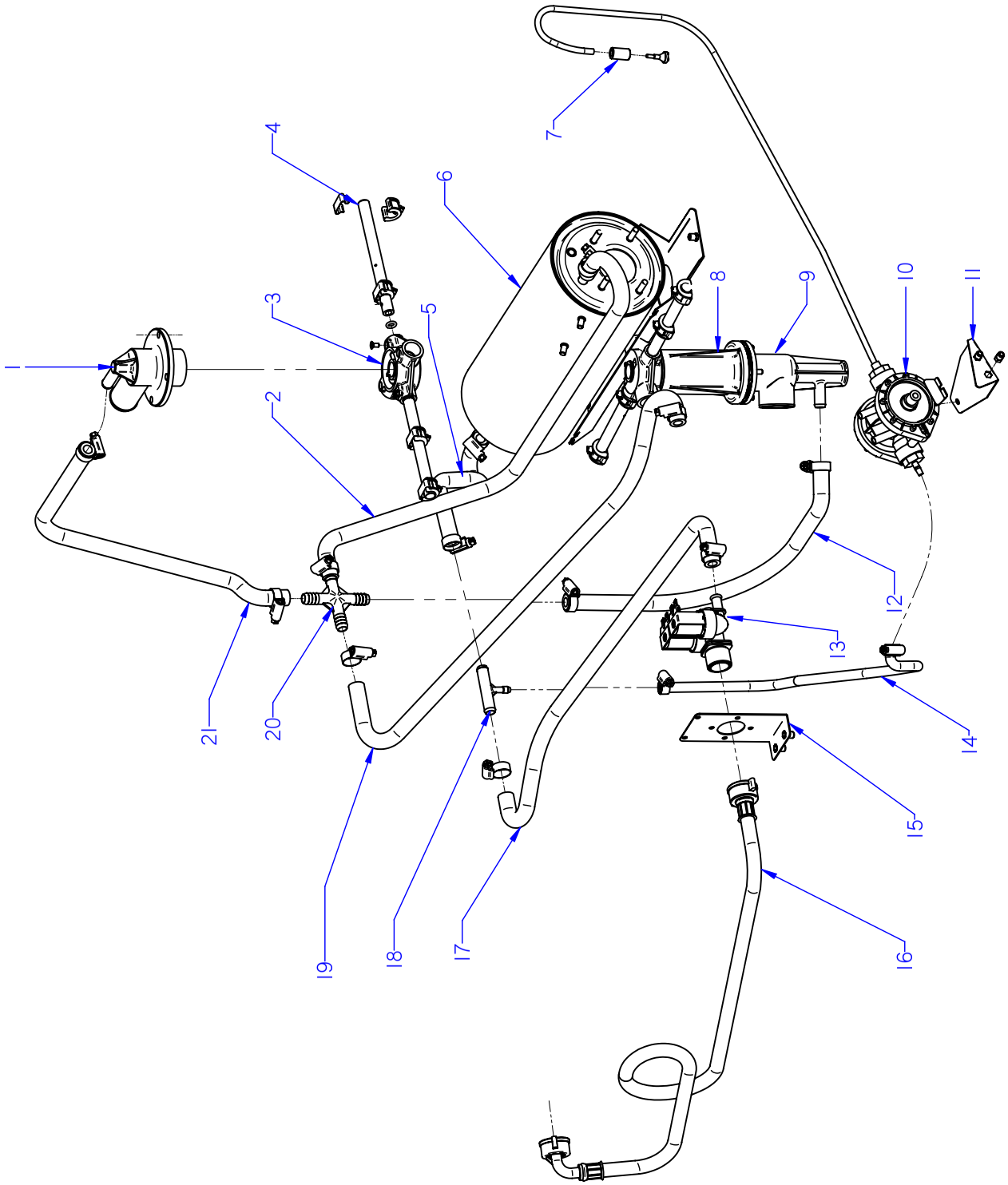


ITEM MARCADO EN COLOR = REPUESTO RECOMENDADO
COLOURED ITEM = RECOMMENDED SPARE PART

| N plano | Firma | Fecha | Aparato | Lamina | |
|---|---|---|---|---|---|
| C-2456 | | 2009-12 | CONJUNTO FUNCIONAL ACLARADO<br>LAVAVASOS AD-15 | 5 | Fagor Industrial S.Coop.<br>Oñate |

| MOD. | LAVAVASOS | ZONA | CONJUNTO FUNCIONAL ACLARADO | PLANO | C-2456 |
|---|---|---|---|---|---|

| ITEM | CODIGO | DENOMINACION | TEXTO | AD-15 | | | | | | | NOTAS |
|---|---|---|---|---|---|---|---|---|---|---|---|
| 1 | Z410703000 | SOPORTE DISTRIBUIDOR SUPER. | UPPER DISTRIBUTION SUPPOR | 1 | | | | | | | |
| | Q232040000 | ARANDELA A6 | WASHER A6 | 4 | | | | | | | |
| | Q262040000 | ARANDELA GROW. A6 A.304 | WASHER GROW. A6 A.304 | 4 | | | | | | | |
| | Q162040000 | TUERCA EXAGONAL M6 | HEXAGONAL NUT M6 | 4 | | | | | | | |
| 2 | 3676900000 | TUBO GOMA NEGRA Ø17*10 | BLACK RUBBER PIPE Ø17*10 | 1 | | | | | | | |
| | Q881302000 | ABRAZADERA 12/20 | CLAMP 12/20 | 2 | | | | | | | |
| 3 | Z410704000 | CRUCETA | CROSSPIECE | 2 | | | | | | | |
| | Q152016000 | TORNILLO ESPECIAL M.5X0.8 | SPECIAL BOLT M.5X0.8 | 2 | | | | | | | |
| | Z410705000 | CASQUILLO CRUCETA | CROSSPIECE BUSHING | 4 | | | | | | | |
| 4 | Z461901000 | RAMA ACLARADO B | RINSE BRANCH B | 2 | | | | | | | |
| S/Nº | Z461902000 | RAMA ACLARADO A | RINSE BRANCH A | 2 | | | | | | | |
| | Z201905000 | TOBERA ACLARADO | RINSE NOZZLE | 8 | | | | | | | |
| | Z201906000 | ENGANCHE TOB. ACLA.19728 | NOZZLE LATCH RINSE.19728 | 8 | | | | | | | |
| | Q307036000 | JUNTA TORICA 5,28X8,84X1,78 | O-RING 5.28X8.84X1.78 | 8 | | | | | | | |
| | Q042021000 | TORNILL. AVELLANADO M4X10 A304 | COUNTERSUNK BOLT M4X10 A3 | 4 | | | | | | | |
| 5 | 3676900000 | TUBO GOMA NEGRA Ø17*10 | BLACK RUBBER PIPE Ø17*10 | 1 | | | | | | | |
| | Q881302000 | ABRAZADERA 12/20 | CLAMP 12/20 | 2 | | | | | | | |
| 6 | Z401730000 | CALDERIN LAVAVASOS 10-2 | GLASSWASHER BOILER 10-2 | 1 | | | | | | | ELIMINADO 15.10.2012 |
| 6 | 12046994 | CALDERIN COMPLETO LVS. W | GLASSWASHER BOILER 10-2 | 1 | | | | | | | INTRODUCIDO 15.10.2012 |
| 7 | Z701152000 | PESO FILTRO | FILTER WEIGHT | 1 | | | | | | | |
| 8 | Z410701000 | SOPORTE INFERIOR CUADRO | LOWER SUPPORT BRACKET | 1 | | | | | | | |
| 9 | Z410702000 | PASAMUROS CESTO CUADRADO | SQUARE BASKET WALL BUSHIN | 1 | | | | | | | |
| | Q232030000 | ARANDELA A5 | WASHER A5 | 4 | | | | | | | |
| | Q262030000 | ARANDELA GROW. A5 A.304 | WASHER GROW. A5 A.304 | 4 | | | | | | | |
| | Q162030000 | TUERCA EXAGONAL M5 | HEXAGONAL NUT M5 | 4 | | | | | | | |
| 10 | Z211109000 | DOSIFICADOR TENSOACTIVO N-6 | SURFACE ACT. DISP. N-6 | 1 | | | | | | | ELIMINADO 18.06.2012 |
| 10 | 12045206 | DOSIFICADOR_ABRILLANTADOR_AQ | RINSE AID DISPENSER | 1 | | | | | | | INTRODUCIDO 18.06.2012 |
| S/Nº | Z448618000 | CONDUCTO ABRILLANTADOR | POLISH DUCT | 1 | | | | | | | |
| 11 | Z401116000 | SOPORTE DOSIFICADOR | DISPENSER SUPPORT | 1 | | | | | | | |
| | Q242030000 | ARANDELA ABANICO A5 A.304 | FAN WASHER A5 A.304 | 4 | | | | | | | |
| | Q152004000 | TORNILLO APLASTADO M5x13 A304 | FLAT HEADED BOLT M5x13 A30 | 2 | | | | | | | |

| MOD. | LAVAVASOS | ZONA | CONJUNTO FUNCIONAL ACLARADO | PLANO | C-2456 |
|---|---|---|---|---|---|

| ITEM | CODIGO | DENOMINACION | TEXTO | AD-15 | | | | | | | NOTAS |
|---|---|---|---|---|---|---|---|---|---|---|---|
| 12 | 3676900000 | TUBO GOMA NEGRA Ø17*10 | BLACK RUBBER PIPE Ø17*10 | 1 | | | | | | | |
| | Q881302000 | ABRAZADERA 12/20 | CLAMP 12/20 | 2 | | | | | | | |
| 13 | P255001000 | ELECTROVALVULA DOBLE | DOUBLE SOLENOID VALVE | 1 | | | | | | | |
| 14 | 3704000000 | TUBO GOMA NEGRA Ø10,5*5 | BLACK RUBBER PIPE Ø10,5*5 | 1 | | | | | | | |
| | Q881308000 | ABRAZADERA 8/14 | CLAMP 8/14 | 2 | | | | | | | |
| 15 | Z401111000 | SOPORTE ELECTROVALVULA | SOLENOID VLVE SUPPORT | 1 | | | | | | | |
| | Q242030000 | ARANDELA ABANICO A5 A.304 | FAN WASHER A5 A.304 | 2 | | | | | | | |
| | Q152004000 | TORNILLO APLASTADO M5x13 A304 | FLAT HEADED BOLT M5x13 A30 | 2 | | | | | | | |
| | Q152024000 | TORNILLO AVELLANADO M4X8 A304 | COUNTERSUNK BOLT M4X8 A3 | 2 | | | | | | | |
| 16 | Z601114000 | MANGUERA ENTRADA AGUA | WATER INTAKE HOSE | 1 | | | | | | | |
| 17 | 3676900000 | TUBO GOMA NEGRA Ø17*10 | BLACK RUBBER PIPE Ø17*10 | 1 | | | | | | | |
| | Q881302000 | ABRAZADERA 12/20 | CLAMP 12/20 | 2 | | | | | | | |
| 18 | Z601157000 | TOMA PRESION | PRESSURE INTAKE | 1 | | | | | | | |
| 19 | 3676900000 | TUBO GOMA NEGRA Ø17*10 | BLACK RUBBER PIPE Ø17*10 | 1 | | | | | | | |
| | Q881302000 | ABRAZADERA 12/20 | CLAMP 12/20 | 2 | | | | | | | |
| 20 | Z401108000 | RACORD EN CRUZ | DIAGONAL CONNECTION | 1 | | | | | | | |
| 21 | 3676900000 | TUBO GOMA NEGRA Ø17*10 | BLACK RUBBER PIPE Ø17*10 | 1 | | | | | | | |
| | Q881302000 | ABRAZADERA 12/20 | CLAMP 12/20 | 2 | | | | | | | |

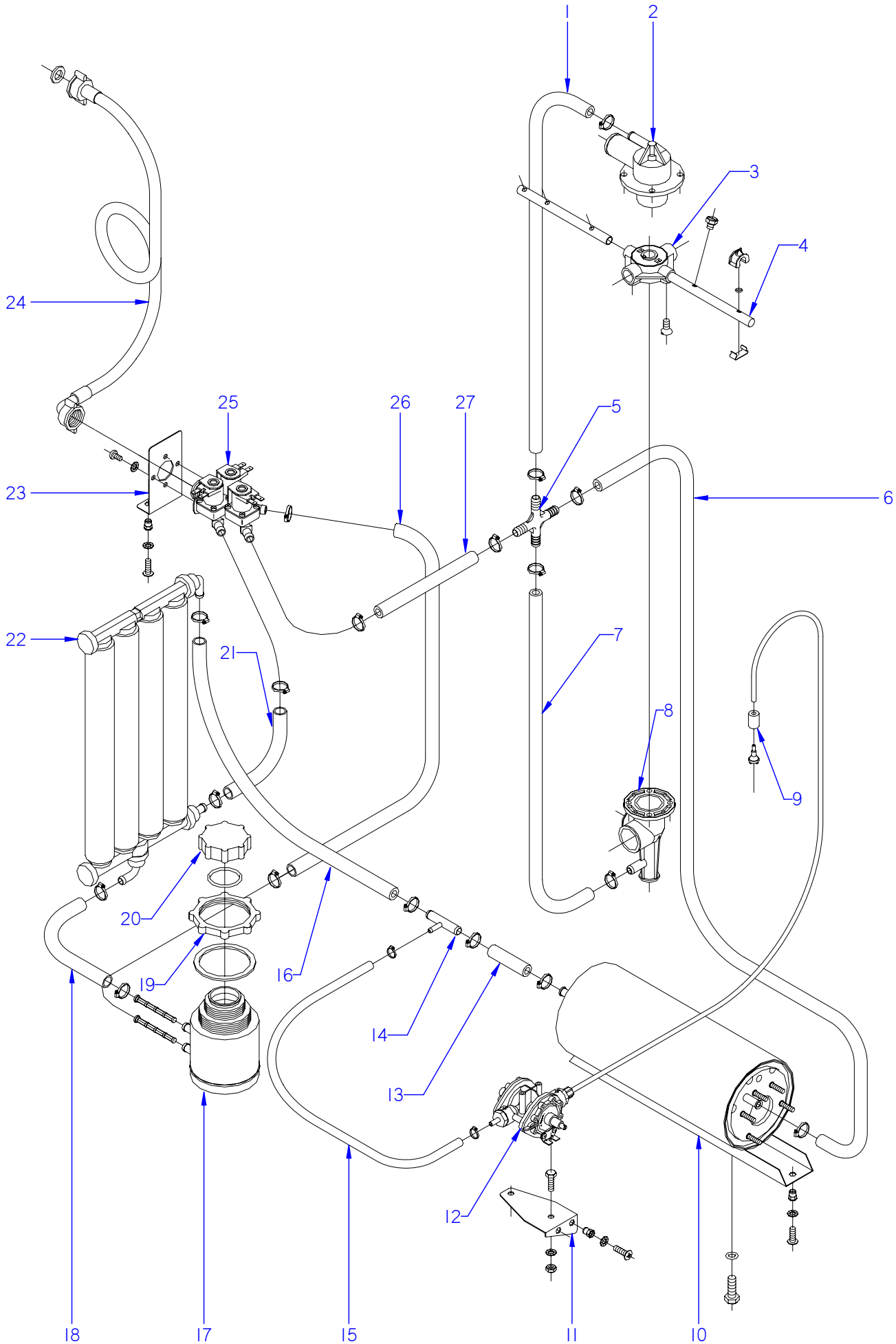


ITEM MARCADO EN COLOR = REPUESTO RECOMENDADO
COLOURED ITEM = RECOMMENDED SPARE PART

| N plano | Firma | Fecha | Aparato | CONJUNTO FUNCIONAL ACLARADO | Lamina | |
|---|---|---|---|---|---|---|
| C-2457 | | 2009-12 | LAVAVASOS AD-15D; AD-21D | | 6 | Fagor Industrial S.Coop. FAGOR Onate |

| MOD. | LAVAVASOS | ZONA | CONJUNTO FUNCIONAL ACLARADO | PLANO | C-2457 |
|---|---|---|---|---|---|

| ITEM | CODIGO | DENOMINACION | TEXTO | AD-15 D | AD-21 D | | | | | | NOTAS |
|---|---|---|---|---|---|---|---|---|---|---|---|
| 1 | 3676900000 | TUBO GOMA NEGRA Ø17*10 | BLACK RUBBER PIPE Ø17*10 | 1 | 1 | | | | | | |
| | Q881302000 | ABRAZADERA 12/20 | CLAMP 12/20 | 2 | 2 | | | | | | |
| 2 | Z410703000 | SOPORTE DISTRIBUIDOR SUPER. | UPPER DISTRIBUTION SUPPOR | 1 | 1 | | | | | | |
| | Q232040000 | ARANDELA A6 | WASHER A6 | 4 | 4 | | | | | | |
| | Q262040000 | ARANDELA GROW. A6 A.304 | WASHER GROW. A6 A.304 | 4 | 4 | | | | | | |
| | Q162040000 | TUERCA EXAGONAL M6 | HEXAGONAL NUT M6 | 4 | 4 | | | | | | |
| 3 | Z410704000 | CRUCETA | CROSSPIECE | 2 | 2 | | | | | | |
| | Q152016000 | TORNILLO ESPECIAL M.5X0.8 | SPECIAL BOLT M.5X0.8 | 2 | 2 | | | | | | |
| | Z410705000 | CASQUILLO CRUCETA | CROSSPIECE BUSHING | 4 | 4 | | | | | | |
| 4 | Z461901000 | RAMA ACLARADO B | RINSE BRANCH B | 2 | _ | | | | | | |
| 4 | Z441902000 | RAMA ACLARADO B | RINSE BRANCH B | _ | 2 | | | | | | |
| S/Nº | Z461902000 | RAMA ACLARADO A | RINSE BRANCH A | 2 | _ | | | | | | |
| S/Nº | Z441901000 | RAMA ACLARADO A | RINSE BRANCH A | _ | 2 | | | | | | |
| | Z201905000 | TOBERA ACLARADO | RINSE NOZZLE | 8 | _ | | | | | | |
| | Z211903000 | TOBERA ACLARADO | RINSE NOZZLE | _ | 10 | | | | | | |
| | Z201906000 | ENGANCHE TOB. ACLA.19728 | NOZZLE LATCH RINSE.19728 | 8 | _ | | | | | | |
| | Q307036000 | JUNTA TORICA 5,28X8,84X1,78 | O-RING 5.28X8.84X1.78 | 8 | _ | | | | | | |
| | Q042021000 | TORNILL. AVELLANADO M4X10 A304 | COUNTERSUNK BOLT M4X10 A3 | 4 | 4 | | | | | | |
| 5 | Z401108000 | RACORD EN CRUZ | DIAGONAL CONNECTION | 1 | 1 | | | | | | |
| 6 | 3676900000 | TUBO GOMA NEGRA Ø17*10 | BLACK RUBBER PIPE Ø17*10 | 1 | 1 | | | | | | |
| | Q881302000 | ABRAZADERA 12/20 | CLAMP 12/20 | 2 | 2 | | | | | | |
| 7 | 3676900000 | TUBO GOMA NEGRA Ø17*10 | BLACK RUBBER PIPE Ø17*10 | 1 | 1 | | | | | | |
| | Q881302000 | ABRAZADERA 12/20 | CLAMP 12/20 | 2 | 2 | | | | | | |
| 8 | Z410702000 | PASAMUROS CESTO CUADRADO | SQUARE BASKET WALL BUSHIN | 1 | 1 | | | | | | |
| | Q232030000 | ARANDELA A5 | WASHER A5 | 4 | 4 | | | | | | |
| | Q262030000 | ARANDELA GROW. A5 A.304 | WASHER GROW. A5 A.304 | 4 | 4 | | | | | | |
| | Q162030000 | TUERCA EXAGONAL M5 | HEXAGONAL NUT M5 | 4 | 4 | | | | | | |
| 9 | Z701152000 | PESO FILTRO | FILTER WEIGHT | 1 | 1 | | | | | | |
| 10 | Z401730000 | CALDERIN LAVAVASOS 10-2 | GLASSWASHER BOILER 10-2 | 1 | 1 | | | | | | ELIMINADO 15.10.2012 |
| 10 | 12046994 | CALDERIN COMPLETO LVS. W | GLASSWASHER BOILER 10-2 | 1 | 1 | | | | | | INTRODUCIDO 15.10.2012 |
| | | | | | | | | | | | |

| MOD. | LAVAVASOS | ZONA | CONJUNTO FUNCIONAL ACLARADO | PLANO | C-2457 |
|---|---|---|---|---|---|

| ITEM | CODIGO | DENOMINACION | TEXTO | AD-15 D | AD-21 D | | | | | | NOTAS |
|---|---|---|---|---|---|---|---|---|---|---|---|
| 11 | Z401116000 | SOPORTE DOSIFICADOR | DISPENSER SUPPORT | 1 | 1 | | | | | | |
| | Q242030000 | ARANDELA ABANICO A5 A.304 | FAN WASHER A5 A.304 | 4 | 4 | | | | | | |
| | Q152004000 | TORNILLO APLASTADO M5x13 A304 | FLAT HEADED BOLT M5x13 A30 | 2 | 2 | | | | | | |
| 12 | Z211109000 | DOSIFICADOR TENSOACTIVO N-6 | SURFACE ACT. DISP. N-6 | 1 | 1 | | | | | | ELIMINADO 18.06.2012 |
| 12 | 12045206 | DOSIFICADOR_ABRILLANTADOR_AQ | RINSE AID DISPENSER | 1 | 1 | | | | | | INTRODUCIDO 18.06.2012 |
| S/Nº | Z448618000 | CONDUCTO ABRILLANTADOR | POLISH DUCT | 1 | 1 | | | | | | |
| 13 | 3676900000 | TUBO GOMA NEGRA Ø17*10 | BLACK RUBBER PIPE Ø17*10 | 1 | 1 | | | | | | |
| | Q881302000 | ABRAZADERA 12/20 | CLAMP 12/20 | 2 | 2 | | | | | | |
| 14 | Z601157000 | TOMA PRESION | PRESSURE INTAKE | 1 | 1 | | | | | | |
| 15 | 3704000000 | TUBO GOMA NEGRA Ø10,5*5 | BLACK RUBBER PIPE Ø10,5*5 | 1 | 1 | | | | | | |
| | Q881308000 | ABRAZADERA 8/14 | CLAMP 8/14 | 2 | 2 | | | | | | |
| 16 | 3676900000 | TUBO GOMA NEGRA Ø17*10 | BLACK RUBBER PIPE Ø17*10 | 1 | 1 | | | | | | |
| | Q881302000 | ABRAZADERA 12/20 | CLAMP 12/20 | 2 | 2 | | | | | | |
| 17 | Z471102000 | DEPOSITO SOLDADO | WELDED TANK | 1 | 1 | | | | | | |
| | Z471105000 | FILTRO (BITRON 06281.01) | FILTER (BITRON 06281.01) | 2 | 2 | | | | | | |
| 18 | 3676900000 | TUBO GOMA NEGRA Ø17*10 | BLACK RUBBER PIPE Ø17*10 | 1 | 1 | | | | | | |
| | Q881302000 | ABRAZADERA 12/20 | CLAMP 12/20 | 2 | 2 | | | | | | |
| 19 | Z471106000 | TUERCA (BITRON 27414.00) | NUT (BITRON 27414.00) | 1 | 1 | | | | | | ELIMINADO 01.05.2012 |
| 19 | 12044660 | TUERCA BITRON | NUT BITRON | 1 | 1 | | | | | | INTRODUCIDO 01.05.2012 |
| | Z471107000 | JUNTA TUERCA (BITRON 15702.01) | NUT SEAL (BITRON 15702.01) | 1 | 1 | | | | | | ELIMINADO 07.01.2013 |
| | 12047154 | JUNTA TUERCA | NUT SEAL | 1 | 1 | | | | | | INTRODUCIDO 07.01.2013 |
| 20 | Z471108000 | TAPON (BITRON 27415.00) | PLUG (BITRON 27415.00) | 1 | 1 | | | | | | |
| | Z471109000 | JUNTA TAPON (BITRON 06485.02) | PLUG SEAL (BITRON 06485.02) | 1 | 1 | | | | | | |
| 21 | 3676900000 | TUBO GOMA NEGRA Ø17*10 | BLACK RUBBER PIPE Ø17*10 | 1 | 1 | | | | | | |
| | Q881302000 | ABRAZADERA 12/20 | CLAMP 12/20 | 2 | 2 | | | | | | |
| 22 | Z471101000 | DESCALCIFICADOR 4 COLUMNAS | WATER SOFTENER 4 COLUMN | 1 | 1 | | | | | | |
| | Z471111000 | SOPOR. SUPERIOR DESCALCIFICAD. | UPPER W-SOFT. SUPPORT. | 1 | _ | | | | | | |
| | Z491101000 | SOPOR. SUPERIOR DESCALCIFICAD. | UPPER W-SOFT. SUPPORT. | _ | 1 | | | | | | |
| | Z471112000 | SOPOR. INFERIOR DESCALCIFICAD. | LOWER W-SOFT. SUPPORT. | 1 | 1 | | | | | | |
| | | | | | | | | | | | |
| | | | | | | | | | | | |

| MOD. | LAVAVASOS | ZONA | CONJUNTO FUNCIONAL ACLARADO | PLANO | C-2457 |
|---|---|---|---|---|---|

| ITEM | CODIGO | DENOMINACION | TEXTO | AD-15 D | AD-21 D | | | | | | NOTAS |
|---|---|---|---|---|---|---|---|---|---|---|---|
| 23 | Z401111000 | SOPORTE ELECTROVALVULA | SOLENOID VLVE SUPPORT | 1 | 1 | | | | | | |
| | Q242030000 | ARANDELA ABANICO A5 A.304 | FAN WASHER A5 A.304 | 2 | 2 | | | | | | |
| | Q152004000 | TORNILLO APLASTADO M5x13 A304 | FLAT HEADED BOLT M5x13 A30 | 2 | 2 | | | | | | |
| | Q152024000 | TORNILLO AVELLANADO M4X8 A304 | COUNTERSUNK BOLT M4X8 A3 | 2 | 2 | | | | | | |
| 24 | Z602121000 | MANGUERA ENTRADA AGUA | WATER INTAKE HOSE | 1 | 1 | | | | | | |
| 25 | Z611124000 | (12Z6111240) ELECTROVAL.TRIPLE | (12Z6111240) SOLENOID VALVE | 1 | 1 | | | | | | |
| 26 | 3676900000 | TUBO GOMA NEGRA Ø17*10 | BLACK RUBBER PIPE Ø17*10 | 1 | 1 | | | | | | |
| | Q881302000 | ABRAZADERA 12/20 | CLAMP 12/20 | 2 | 2 | | | | | | |
| 27 | 3676900000 | TUBO GOMA NEGRA Ø17*10 | BLACK RUBBER PIPE Ø17*10 | 1 | 1 | | | | | | |
| | Q881302000 | ABRAZADERA 12/20 | CLAMP 12/20 | 2 | 2 | | | | | | |

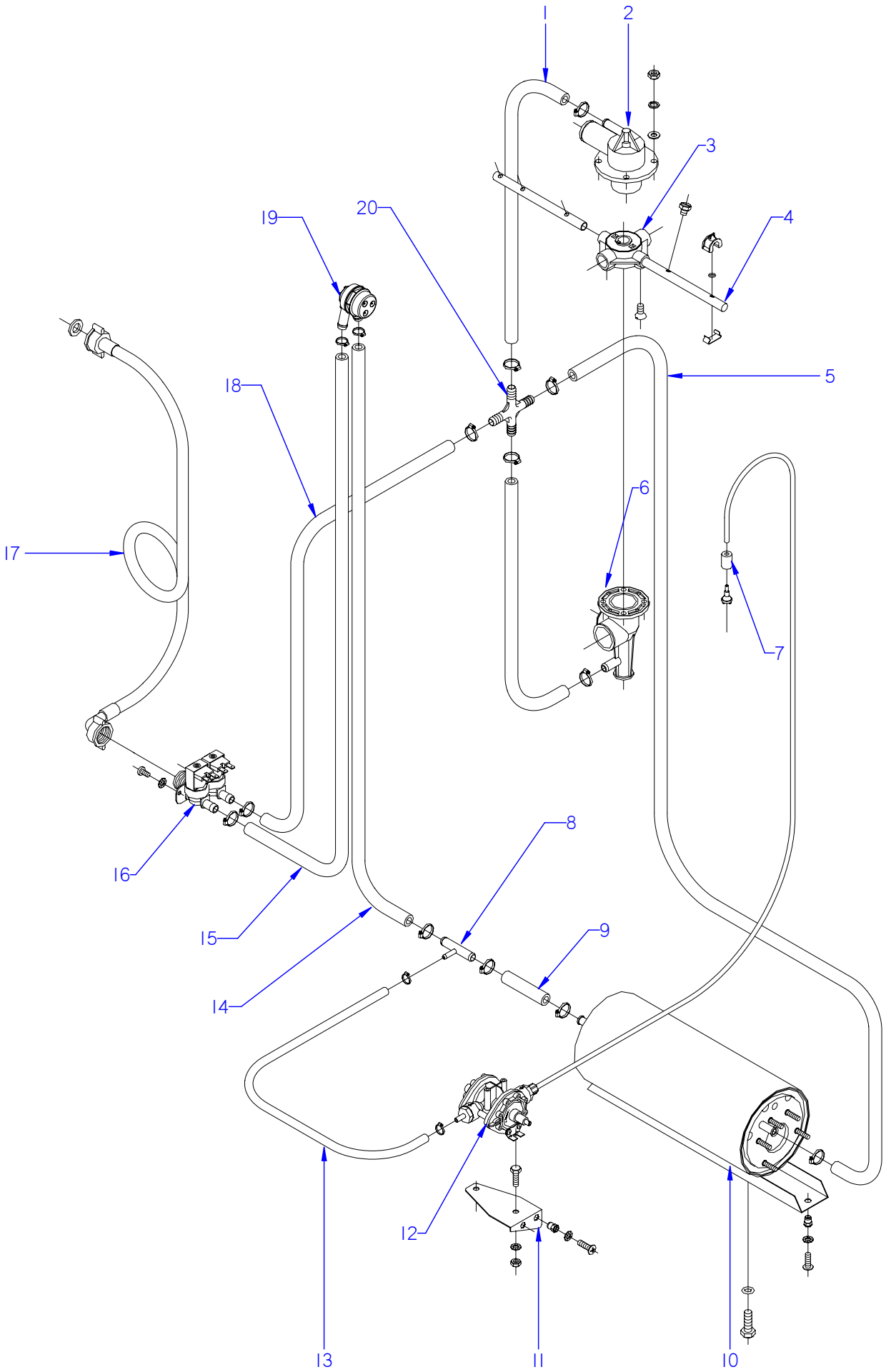


ITEM MARCADO EN COLOR = REPUESTO RECOMENDADO
COLOURED ITEM = RECOMMENDED SPARE PART

| N plano | Firma | Fecha | Aparato | | Lamina | |
|---|---|---|---|---|---|---|
| C-2458 | | 2009-12 | CONJUNTO FUNCIONAL ACLARADO<br>LAVAVASOS AD-21;B; B DD; DD | | 7 | Fagor Industrial S.Coop. FAGOR<br>Oñate |

| MOD. | LAVAVASOS | ZONA | CONJUNTO FUNCIONAL ACLARADO | PLANO | C-2458 |
|---|---|---|---|---|---|

| ITEM | CODIGO | DENOMINACION | TEXTO | AD-21 | AD-21 B | AD-21 B DD | AD-21 DD | | | | NOTAS |
|---|---|---|---|---|---|---|---|---|---|---|---|
| 1 | 3676900000 | TUBO GOMA NEGRA Ø17*10 | BLACK RUBBER PIPE Ø17*10 | 2 | 2 | 2 | 2 | | | | |
| | Q881302000 | ABRAZADERA 12/20 | CLAMP 12/20 | 6 | 6 | 6 | 6 | | | | |
| 2 | Z410703000 | SOPORTE DISTRIBUIDOR SUPER. | UPPER DISTRIBUTION SUPPOR | 1 | 1 | 1 | 1 | | | | |
| | Q232040000 | ARANDELA A6 | WASHER A6 | 4 | 4 | 4 | 4 | | | | |
| | Q262040000 | ARANDELA GROW. A6 A.304 | WASHER GROW. A6 A.304 | 4 | 4 | 4 | 4 | | | | |
| | Q162040000 | TUERCA EXAGONAL M6 | HEXAGONAL NUT M6 | 4 | 4 | 4 | 4 | | | | |
| 3 | Z410704000 | CRUCETA | CROSSPIECE | 2 | 2 | 2 | 2 | | | | |
| | Q152016000 | TORNILLO ESPECIAL M.5X0.8 | SPECIAL BOLT M.5X0.8 | 2 | 2 | 2 | 2 | | | | |
| | Z410705000 | CASQUILLO CRUCETA | CROSSPIECE BUSHING | 4 | 4 | 4 | 4 | | | | |
| 4 | Z441902000 | RAMA ACLARADO B | RINSE BRANCH B | 2 | 2 | 2 | 2 | | | | |
| S/Nº | Z441901000 | RAMA ACLARADO A | RINSE BRANCH A | 2 | 2 | 2 | 2 | | | | |
| | Z211903000 | TOBERA ACLARADO | RINSE NOZZLE | 10 | 10 | 10 | 10 | | | | |
| | Q042021000 | TORNILL. AVELLANADO M4X10 A304 | COUNTERSUNK BOLT M4X10 A3 | 4 | 4 | 4 | 4 | | | | |
| 5 | 3676900000 | TUBO GOMA NEGRA Ø17*10 | BLACK RUBBER PIPE Ø17*10 | 1 | 1 | 1 | 1 | | | | |
| | Q881302000 | ABRAZADERA 12/20 | CLAMP 12/20 | 1 | 1 | 1 | 1 | | | | |
| 6 | Z410702000 | PASAMUROS CESTO CUADRADO | SQUARE BASKET WALL BUSHIN | 1 | 1 | 1 | 1 | | | | |
| | Q232030000 | ARANDELA A5 | WASHER A5 | 4 | 4 | 4 | 4 | | | | |
| | Q262030000 | ARANDELA GROW. A5 A.304 | WASHER GROW. A5 A.304 | 4 | 4 | 4 | 4 | | | | |
| | Q162030000 | TUERCA EXAGONAL M5 | HEXAGONAL NUT M5 | 4 | 4 | 4 | 4 | | | | |
| 7 | Z701152000 | PESO FILTRO | FILTER WEIGHT | 1 | 1 | 1 | 1 | | | | |
| 8 | Z601157000 | TOMA PRESION | PRESSURE INTAKE | 1 | 1 | 1 | 1 | | | | |
| 9 | 3676900000 | TUBO GOMA NEGRA Ø17*10 | BLACK RUBBER PIPE Ø17*10 | 1 | 1 | 1 | 1 | | | | |
| | Q881302000 | ABRAZADERA 12/20 | CLAMP 12/20 | 4 | 4 | 4 | 4 | | | | |
| 10 | Z401730000 | CALDERIN LAVAVASOS 10-2 | GLASSWASHER BOILER 10-2 | 1 | 1 | 1 | 1 | | | | ELIMINADO 15.10.2012 |
| 10 | 12046994 | CALDERIN COMPLETO LVS. W | GLASSWASHER BOILER 10-2 | 1 | 1 | 1 | 1 | | | | INTRODUCIDO 15.10.2012 |
| 11 | Z401116000 | SOPORTE DOSIFICADOR | DISPENSER SUPPORT | 1 | 1 | 1 | 1 | | | | |
| | Q242030000 | ARANDELA ABANICO A5 A.304 | FAN WASHER A5 A.304 | 4 | 4 | 4 | 4 | | | | |
| | Q152004000 | TORNILLO APLASTADO M5x13 A304 | FLAT HEADED BOLT M5x13 A30 | 2 | 2 | 2 | 2 | | | | |
| 12 | Z211109000 | DOSIFICADOR TENSOACTIVO N-6 | SURFACE ACT. DISP. N-6 | 1 | 1 | 1 | 1 | | | | ELIMINADO 18.06.2012 |
| 12 | 12045206 | DOSIFICADOR_ABRILLANTADOR_AQ | RINSE AID DISPENSER | 1 | 1 | 1 | 1 | | | | INTRODUCIDO 18.06.2012 |
| S/Nº | Z448618000 | CONDUCTO ABRILLANTADOR | POLISH DUCT | 1 | 1 | 1 | 1 | | | | |

| MOD. | LAVAVASOS | ZONA | CONJUNTO FUNCIONAL ACLARADO | PLANO | C-2458 |
|---|---|---|---|---|---|

| ITEM | CODIGO | DENOMINACION | TEXTO | AD-21 | AD-21 B | AD-21 B DD | AD-21 DD | | | | NOTAS |
|---|---|---|---|---|---|---|---|---|---|---|---|
| 13 | 3704000000 | TUBO GOMA NEGRA Ø10,5*5 | BLACK RUBBER PIPE Ø10,5*5 | 1 | 1 | 1 | 1 | | | | |
| | Q881308000 | ABRAZADERA 8/14 | CLAMP 8/14 | 2 | 2 | 2 | 2 | | | | |
| 14 | 3676900000 | TUBO GOMA NEGRA Ø17*10 | BLACK RUBBER PIPE Ø17*10 | 1 | 1 | 1 | 1 | | | | |
| | Q881302000 | ABRAZADERA 12/20 | CLAMP 12/20 | 2 | 2 | 2 | 2 | | | | |
| 15 | 3676900000 | TUBO GOMA NEGRA Ø17*10 | BLACK RUBBER PIPE Ø17*10 | 1 | 1 | 1 | 1 | | | | |
| | Q881302000 | ABRAZADERA 12/20 | CLAMP 12/20 | 2 | 2 | 2 | 2 | | | | |
| 16 | P255001000 | ELECTROVALVULA DOBLE | DOUBLE SOLENOID VALVE | 1 | 1 | 1 | 1 | | | | |
| 17 | Z601114000 | MANGUERA ENTRADA AGUA | WATER INTAKE HOSE | 1 | 1 | 1 | 1 | | | | |
| 18 | 3676900000 | TUBO GOMA NEGRA Ø17*10 | BLACK RUBBER PIPE Ø17*10 | 1 | 1 | 1 | 1 | | | | |
| | Q881302000 | ABRAZADERA 12/20 | CLAMP 12/20 | 2 | 2 | 2 | 2 | | | | |
| 19 | Z231106000 | VALVULA ANTIRRETORNO | NON-RETURN VALVE | 1 | 1 | 1 | 1 | | | | |
| | Q881302000 | ABRAZADERA 12/20 | CLAMP 12/20 | 2 | 2 | 2 | 2 | | | | |
| 20 | Z401108000 | RACORD EN CRUZ | DIAGONAL CONNECTION | 1 | 1 | 1 | 1 | | | | |

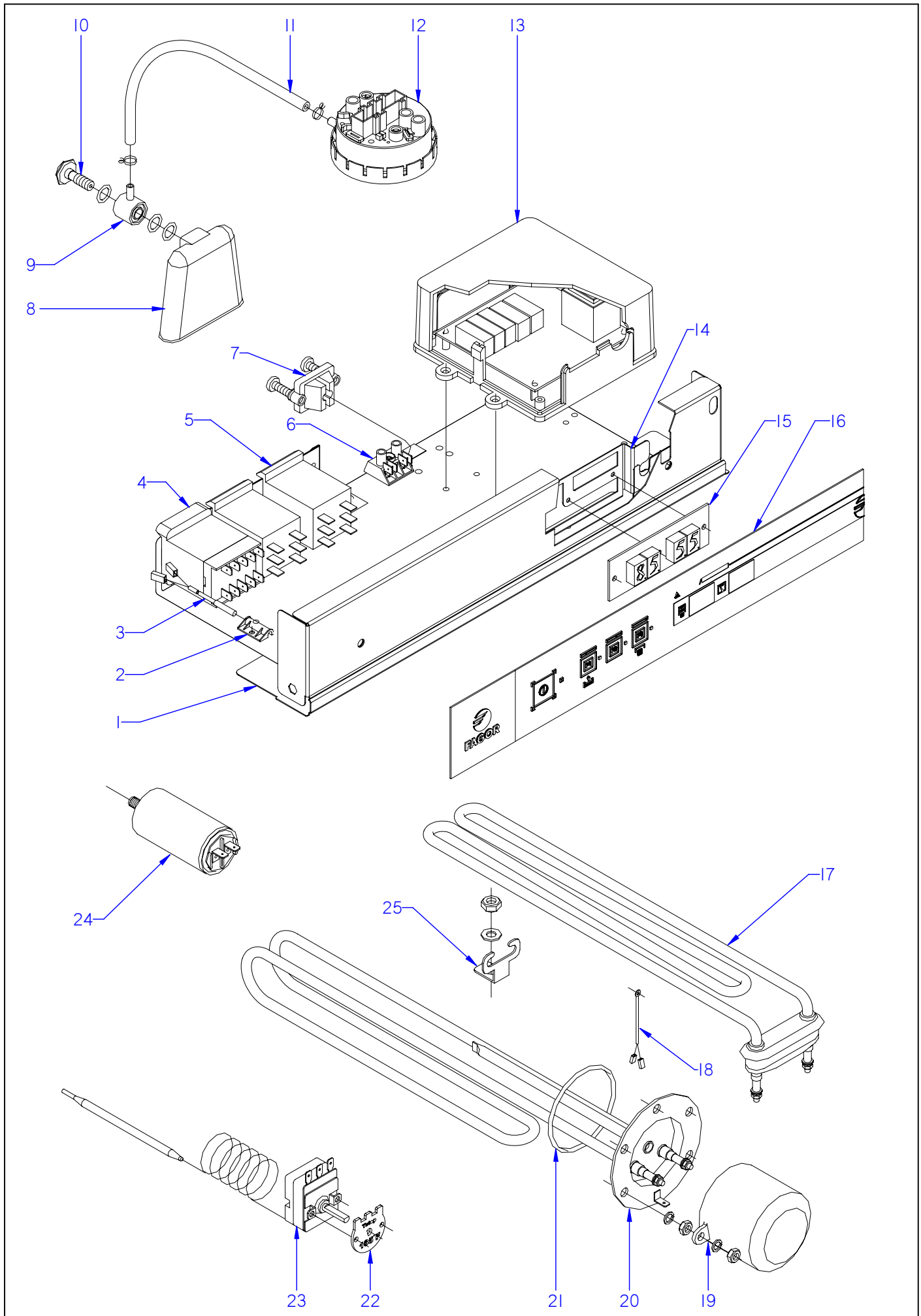


ITEM MARCADO EN COLOR = REPUESTO RECOMENDADO
COLOURED ITEM = RECOMMENDED SPARE PART

| N plano | Firma | Fecha | Aparato | | Lamina | |
|---|---|---|---|---|---|---|
| C-2459 | | 2009-12 | CONJUNTO FUNCIONAL ELECTRICO<br>LAVAVASOS AD | | 8 | Fagor Industrial S.Coop.<br>Onate |

| MOD. | LAVAVASOS | ZONA | CONJUNTO FUNCIONAL ELECTRICO | PLANO | C-2459 |
|---|---|---|---|---|---|

| ITEM | CODIGO | DENOMINACION | TEXTO | AD-15 | AD-15 D | AD-21 | AD-21 B | AD-21B DD | AD-21 D | AD-21 DD | | NOTAS |
|---|---|---|---|---|---|---|---|---|---|---|---|---|
| 1 | Z412910000 | FRENTE COMPLETO AD-15 | COMPLETE FRONT AD-15 | 1 | 1 | _ | _ | _ | _ | _ | | |
| 1 | Z442911000 | FRENTE COMPLETO AD-21 | COMPLETE FRONT AD-21 | _ | _ | 1 | 1 | 1 | 1 | 1 | | |
| 1 | Z448402000 | FRENTE COMPLETO AD-21 W | COMPLETE FRONT AD-21 W | _ | _ | _ | _ | _ | _ | _ | | |
| | Q152004000 | TORNILLO APLASTADO M5x13 A304 | FLAT HEADED BOLT M5x13 A30 | 2 | 2 | 2 | 2 | 2 | 2 | 2 | | |
| 2 | Z203010000 | AMARRE INTERRUP. MAGNETICO | MAGNETIC SWITCH FASTENER | 1 | 1 | 1 | 1 | 1 | 1 | 1 | | |
| | Q232030000 | ARANDELA A5 | WASHER A5 | 1 | 1 | 1 | 1 | 1 | 1 | 1 | | |
| | Q152004000 | TORNILLO APLASTADO M5x13 A304 | FLAT HEADED BOLT M5x13 A30 | 1 | 1 | 1 | 1 | 1 | 1 | 1 | | |
| | Q162030000 | TUERCA EXAGONAL M5 | HEXAGONAL NUT M5 | 1 | 1 | 1 | 1 | 2 | 1 | 2 | | |
| 3 | Z203009000 | INTERRUPTOR MAGNETICO | MAGNETIC SWITCH | 1 | 1 | 1 | 1 | 1 | 1 | 1 | | |
| 4 | 12024011 | CONTACTOR 230 V. 50-60 HZ | CONTACTOR 230 V. 50-60 HZ | 1 | 1 | 1 | 1 | 1 | 1 | 1 | | ELIMINAD. 15.10.12 |
| 4 | 12024011 | CONTACTOR 230 V. 50-60 HZ | CONTACTOR 230 V. 50-60 HZ | 2 | 2 | 2 | 2 | 2 | 2 | 2 | | INTRODUC. 15.10.12 |
| 5 | 12023706 | RELE 230V. 16A 50-60 HZ | RELAY 230V. 16A 50-60 HZ | 2 | 2 | 2 | 2 | 2 | 2 | 2 | | ELIMINAD. 15.10.12 |
| 5 | 12023706 | RELE 230V. 16A 50-60 HZ | RELAY 230V. 16A 50-60 HZ | 1 | 1 | 1 | 1 | 1 | 1 | 1 | | INTRODUC. 15.10.12 |
| 5 | Z683087000 | CONTACTOR 3TF20 01-3AL2 230 | CONTACTOR 3TF20 01-3AL2 | 1 | 1 | 1 | 1 | 1 | 1 | 1 | | INTRODUC.14.05.10 |
| 5 | Z683087000 | CONTACTOR 3TF20 01-3AL2 230 | CONTACTOR 3TF20 01-3AL2 | 1 | 1 | 1 | 1 | 1 | 1 | 1 | | ELIMINAD. 01.06.11 |
| 6 | Z603025000 | REGLETA DE CONEXIONES | CONNECTION STRIP | 1 | 1 | 1 | 1 | 1 | 1 | 1 | | |
| S/Nº | 12045569 | BORNAS PORTAFUSIB. 13A 2,5 | FUSE HOLDER TERMINAL 13A | 1 | 1 | 1 | 1 | 1 | 1 | 1 | | INTRODUC. 18,06,12 |
| | Q032021000 | TORNILLO ALOMADO M4X10 | CURVED SCREW M4X10 | 1 | 1 | 1 | 1 | 1 | 1 | 1 | | |
| | Q162020000 | TUERCA EXAGONAL M4 | HEXAGONAL NUT M4 | 1 | 1 | 1 | 1 | 1 | 1 | 1 | | |
| 7 | Z203020000 | RETENEDOR DE CABLE | CABLE HOLDER | 1 | 1 | 1 | 1 | 1 | 1 | 1 | | |
| 8 | Z203011000 | CAMARA PRESOSTATO | PRESSURE SWITCH | 1 | 1 | 1 | 1 | 1 | 1 | 1 | | |
| 9 | Z203012000 | EMPALME PRESOSTATO | PRESSURE SWITCH CONNEX | 1 | 1 | 1 | 1 | 1 | 1 | 1 | | |
| 10 | Z203013000 | TORNILLO PRESOSTATO | PRESSURE SWITCH BOLT | 1 | 1 | 1 | 1 | 1 | 1 | 1 | | |
| | Q307003000 | JUNTA TORICA 16.01X10.77X2.62 | O-RING 16.01X10.77X2.62 | 3 | 3 | 3 | 3 | 3 | 3 | 3 | | |
| 11 | 3702400000 | TUBO GOMA NEGRO D 8*4 | BLACK RUBBER PIPE Ø 8*4 | 1 | 1 | 1 | 1 | 1 | 1 | 1 | | |
| | P102154000 | BRIDA ELASTICA TUBO | ELASTIC PIPE FLANGE | 2 | 2 | 2 | 2 | 2 | 2 | 2 | | |
| 12 | Z403021000 | PRESOSTATO SIMPLE | SIMPLE PRESSURE SWITCH | 1 | 1 | 1 | _ | _ | 1 | 1 | | |
| 12 | Z433011000 | PRESOSTATO DOBLE | DOUBLE PRESSURE SWITCH | _ | _ | _ | 1 | 1 | _ | _ | | |
| S/Nº | Z218002000 | ESCUADRA AMARRE PRESOSTATO | PRESSURE SWITCH SQUARE | 1 | 1 | 1 | 1 | 1 | 1 | 1 | | |
| | Q082032000 | TORNILLO ALOMADO BZ-3,5X9,5 | ALOM. BOLT BZ-3,5X9,5 | 1 | 1 | 1 | 1 | 1 | 1 | 1 | | |
| | Q419005000 | REMACHE 4X8 ALMG3 / ALUMINIO | RIVET 4X8 ALMG3 / ALUMINIUM | 1 | 1 | 1 | 1 | 1 | 1 | 1 | | |

| MOD. | LAVAVASOS | ZONA | CONJUNTO FUNCIONAL ELECTRICO | PLANO | C-2459 |
|---|---|---|---|---|---|

| ITEM | CODIGO | DENOMINACION | TEXTO | AD-15 | AD-15 D | AD-21 | AD-21 B | AD-21B DD | AD-21 D | AD-21 DD | | NOTAS |
|---|---|---|---|---|---|---|---|---|---|---|---|---|
| 13 | Z213069000 | TARJETA 5 RELES GICAR | CHAMBER 5 RELAY GICAR | 1 | 1 | 1 | 1 | 1 | 1 | 1 | | ELIMINAD. 01.06.11 |
| 13 | Z213073000 | TARJETA 5 RELES | CHAMBER 5 RELAY | 1 | 1 | 1 | 1 | 1 | 1 | 1 | | ELIMINAD. 28.01.13 |
| 13 | 12048170 | TARJETA 230V AC 50/60Hz 5 REL. UL | CHAMBER 230V AC 50/60Hz 5 R | 1 | 1 | 1 | 1 | 1 | 1 | 1 | | ELIMINAD. 02.09.13 |
| 13 | 12008750 | TARJETA 230V AC 50/60Hz 5 REL. UL | CHAMBER 230V AC 50/60Hz 5 R | 1 | 1 | 1 | 1 | 1 | 1 | 1 | | INTRODUC. 02.09.13 |
| | Q232020000 | ARANDELA A4 | WASHER A4 | 4 | 4 | 4 | 4 | 4 | 4 | 4 | | |
| | Q042022000 | TORN. AVELLANADO M4X15 | COUNTERSUNK BOLT M4X15 | 4 | 4 | 4 | 4 | 4 | 4 | 4 | | |
| 14 | Z203088000 | SOPORTE COMPONENTES | COMPON. SUPPORT | 1 | 1 | 1 | 1 | 1 | 1 | 1 | | |
| 14 | Z218432000 | SOPORTE DISPLAY Tª ADVANCE | DISPLAY Tª ADV. SUPPORT | _ | _ | _ | _ | _ | _ | _ | | |
| | Q262030000 | ARANDELA GROW. A5 A.304 | WASHER GROW. A5 A.304 | 2 | 2 | 2 | 2 | 2 | 2 | 2 | | |
| | Q162030000 | TUERCA EXAGONAL M5 | HEXAGONAL NUT M5 | 2 | 2 | 2 | 2 | 2 | 2 | 2 | | |
| | R663036000 | FIJACION CIRCUITO | CIRCUIT BINDINGS | 3 | 3 | 3 | 3 | 3 | 3 | 3 | | ELIMINAD. 29.10.10 |
| 15 | Z713017000 | DISPLAY GICAR TEMPERATURAS | DISPLAY GICAR | 1 | 1 | 1 | 1 | 1 | 1 | 1 | | |
| 15 | Z218433000 | DISPLAY Tª ADVANCE W | DISPLAY Tª ADVANCE W | _ | _ | _ | _ | _ | _ | _ | | |
| 16 | Z412905000 | EMBELLECED. ADHESIVO AD-15 | ADHES. TRIM AD-15 | 1 | _ | _ | _ | _ | _ | _ | | |
| 16 | Z412903000 | EMBELLECED. ADHESIVO AD-15D | ADHES. TRIM AD-15D | _ | 1 | _ | _ | _ | _ | _ | | |
| 16 | Z442906000 | EMBELLECED. ADHESIVO AD-21 | ADHES. TRIM AD-21 | _ | _ | 1 | _ | _ | _ | 1 | | |
| 16 | Z452909000 | EMBELLECED. ADHESIVO AD-21C | ADHES. TRIM AD-21C | _ | _ | _ | 1 | 1 | _ | _ | | |
| 16 | Z452911000 | EMBELLECED. ADHESIVO AD-21D | ADHES. TRIM AD-21D | _ | _ | _ | _ | _ | 1 | _ | | |
| 16 | Z448401000 | EMBELLECED. ADHESIVO AD-21W | ADHES. TRIM AD-21W | _ | _ | _ | _ | _ | _ | _ | | |
| 17 | R223005000 | RESISTENCIA TANQUE | TANK RESISTOR | 1 | 1 | 1 | 1 | 1 | 1 | 1 | | |
| 18 | Z713028000 | SONDA TEMPERATURA GICAR | TEMPERATURA PROBE GICAR | 1 | 1 | 1 | 1 | 1 | 1 | 1 | | |
| 18 | Z268004000 | SONDA TEMPERATURA GICAR | TEMPERATURA PROBE GICAR | _ | _ | _ | _ | _ | _ | _ | | |
| 19 | Z401713000 | CAPERUZA RESISTENC. CALDERIN | BOILER RESIST. CAP | 1 | 1 | 1 | 1 | 1 | 1 | 1 | | |
| | Q163140000 | TUERCA EXAGONAL M6 LATON | HEXAGONAL NUT M6 BRASS | 2 | 2 | 2 | 2 | 2 | 2 | 2 | | |
| | Q242030000 | ARANDELA ABANICO A5 A.304 | FAN WASHER A5 A.304 | 2 | 2 | 2 | 2 | 2 | 2 | 2 | | |
| | Q152004000 | TORNILLO APLASTADO M5x13 A304 | FLAT HEADED BOLT M5x13 A30 | 2 | 2 | 2 | 2 | 2 | 2 | 2 | | |
| 20 | Z401738000 | RESISTENCIA CALDERIN 2400W | BOILER RESISTOR 2400W | 1 | 1 | _ | _ | _ | _ | _ | | |
| 20 | Z421712000 | RESISTENCIA CALDERIN 2800W | BOILER RESISTOR 2800W | _ | _ | 1 | 1 | 1 | 1 | 1 | | |
| | Q221305000 | TUERCA EXAGONAL M4 ZINCADA | HEXAGONAL NUT M4 ZIN. | 2 | 2 | 2 | 2 | 2 | 2 | 2 | | |
| | Q163140000 | TUERCA EXAGONAL M6 LATON | HEXAGONAL NUT M6 BRASS | 5 | 5 | 5 | 5 | 5 | 5 | 5 | | |
| | Q262040000 | ARANDELA GROW. A6 A.304 | WASHER GROW. A6 A.304 | 5 | 5 | 5 | 5 | 5 | 5 | 5 | | |

| MOD. | LAVAVASOS | ZONA | CONJUNTO FUNCIONAL ELECTRICO | PLANO | C-2459 |
|---|---|---|---|---|---|

| ITEM | CODIGO | DENOMINACION | TEXTO | AD-15 | AD-15 D | AD-21 | AD-21 B | AD-21 B DD | AD-21 D | AD-21 DD | | NOTAS |
|---|---|---|---|---|---|---|---|---|---|---|---|---|
| 21 | Q307053000 | JUNTA TORICA 43.82X54.48X5.35 | "O" RING 43.82X54.48X5.35 | 1 | 1 | 1 | 1 | 1 | 1 | 1 | | |
| 22 | Z718446000 | CHAPA W 85ºC | W 85ºC PLATE | 1 | 1 | 1 | 1 | 1 | 1 | 1 | | ELIMINAD. 01.11.12 |
| 23 | Z393005000 | TERMOSTATO CALDERIN | WASH DRUM THERMOSTAT | 2 | 2 | 2 | 2 | 2 | 2 | 2 | | |
| | Q152024000 | TORNILLO AVELLANADO M4X8 A304 | COUNTERSUNK BOLT M4X8 A3( | 2 | 2 | 2 | 2 | 2 | 2 | 2 | | |
| 24 | V817100000 | CONDENSADOR 6 M.F. | CONDENSER 6 M.F. | 1 | 1 | 1 | 1 | 1 | 1 | 1 | | |
| 25 | Z603602000 | SOPORTE RESISTENCIATANQUE | TANK RESISTOR SUPPORT | 1 | 1 | 1 | 1 | 1 | 1 | 1 | | |
| | Q232040000 | ARANDELA A6 | WASHER A6 | 1 | 1 | 1 | 1 | 1 | 1 | 1 | | |
| | Q162040000 | TUERCA EXAGONAL M6 | HEXAGONAL NUT M6 | 1 | 1 | 1 | 1 | 1 | 1 | 1 | | |

| MOD. | LAVAVASOS | ZONA | VARIOS | PLANO | |
|---|---|---|---|---|---|

| ITEM | CODIGO | DENOMINACION | TEXTO | AD-15 | AD-15 D | AD-21 | AD-21 B | AD-21 B DD | AD-21 D | AD-21 DD | | NOTAS |
|---|---|---|---|---|---|---|---|---|---|---|---|---|
| | Z416101000 | FOLLETO INSTRUCCIONES LVS AD | INSTRUCTION LEAFL. LVS AD | 1 | 1 | 1 | 1 | 1 | 1 | 1 | | |
| | Z403042000 | ESQUEMA TEORICO LAVAVA.AD | THEORETICAL DIAGRAM AD | 1 | 1 | 1 | 1 | 1 | 1 | 1 | | PLANO HC-18213 |
| | Z403043000 | ESQUEMA MONTAJE LAVAVA AD | ASSEMBLY DIAGRAM AD | 1 | 1 | 1 | 1 | 1 | 1 | 1 | | PLANO HC-18214 |
| | Z403041000 | INSTALACION ELECT. LAVAVAS. AD | ELEC. INSTALATION AD | 1 | 1 | 1 | 1 | 1 | 1 | 1 | | |
| | 12023746 | CABLE ALIMENTACION | SUPPLY CABLE | 1 | 1 | 1 | 1 | 1 | 1 | 1 | | |
| | 12025115 | CABLEADO CONEXIÓN SONDAS | PROBE CONNECTION WIRING | 1 | 1 | 1 | 1 | 1 | 1 | 1 | | |
| | 12023672 | CABLE CONEXION PLACA-DISPLAY | DISPLAY CONNECTI. WIRING | 1 | 1 | 1 | 1 | 1 | 1 | 1 | | |
| | 12024314 | CABLEADO DOSIFICADOR DTGTE. | DETERGENT DISP. WIRING | _ | _ | _ | _ | 1 | _ | 1 | | |
| | 12024183 | CABLEADO TIERRA M.BOMBA | PUMP LAND WIRING | 1 | 1 | 1 | 1 | 1 | 1 | 1 | | INTRODUC.17.09.10 |

# AD 15, AD 21, AD 15 B, AD 21 B, AD 15 D, AD 21 D, AD 15 C, AD 21 C, AD 21 AR+DD, AD 21 W

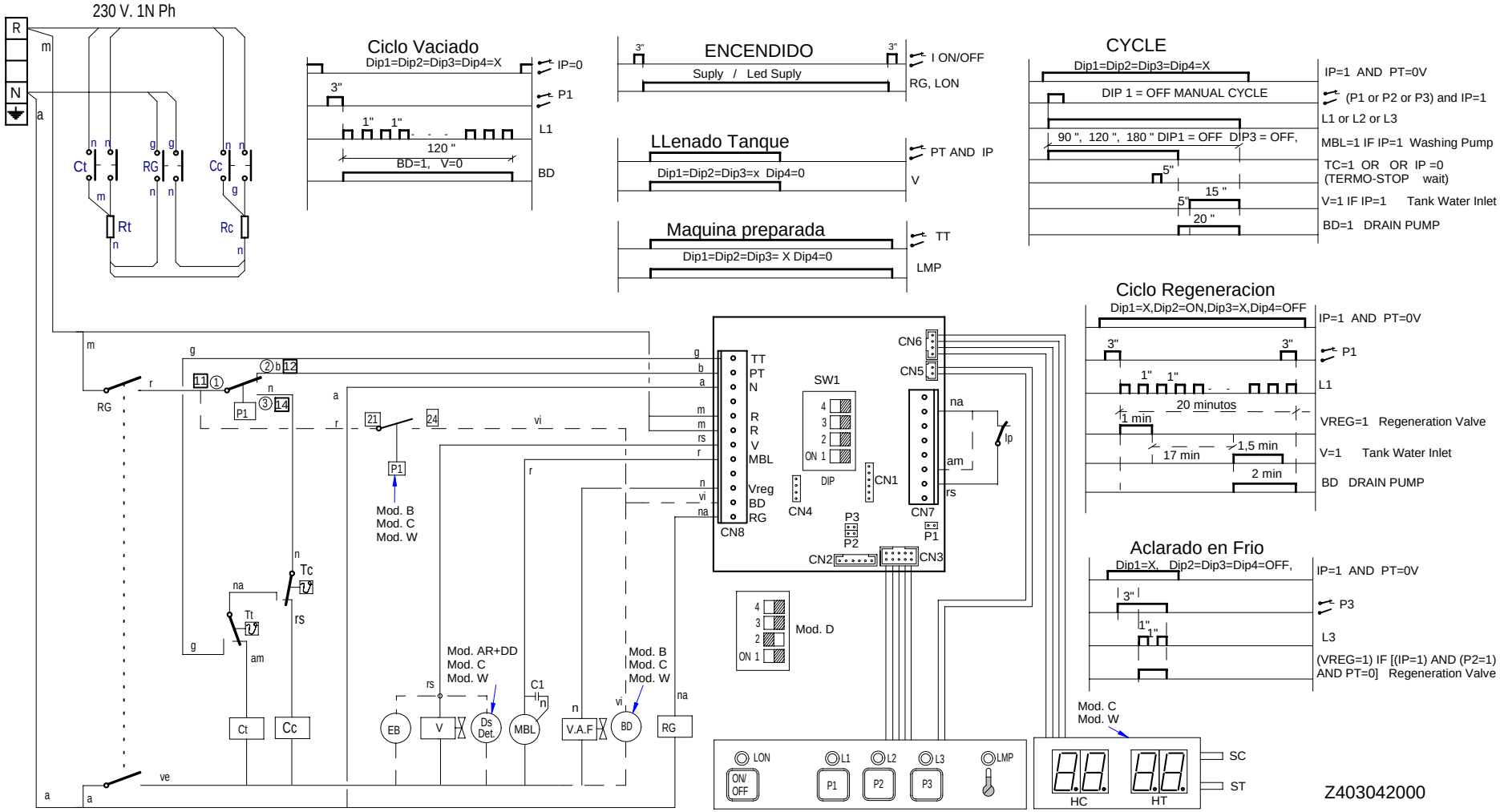


Z403042000

| - | Esquema teorico LAVAVASOS AD | - | - | Z403042000 | - |
|---|---|---|---|---|---|
| Zk./Nº | Pieza | Cant. | Materiala/Material | Klas. zk/Nº Clas. | Gainazal akabera/Tratamiento |
| Zk./Nº | Aldaketa/Modificaciones | | Nork proposatua/Propuesta de | Data/Fecha | Perdoi orokorrak Tolerancias generales |
| . | . | | . | . | |
| . | . | | . | . | < 5 ± 0.2 / 50 ÷ 100 ± 0.8 |
| . | . | | . | . | 5 ÷ 25 ± 0.4 / >100± 1 |
| . | . | | . | . | 25 ÷ 50 ± 0.6 / α ± 1 |
| . | . | | . | . | |

| | Sinadura/Firma | Data/Fecha |
|---|---|---|
| Marraztua/Dibujado | M.Maillo | 30-05-2009 |
| Proiektatua/Proyectado | M.Maillo | 30-05-2009 |
| Egiaztatua/Comprobado | Z.Altube | 30-05-2009 |

FAGOR

Fagor Industrial,Koop.Elk, Mugatua

Gainazal perdoia
Mecanizado superficial
–

Eskala/Escala
-

# LAVAVASOS

Plano Zk./Plano Nº
HC - 18213

Plano hau ezin daiteke erabili, ez berriztatu, gure baimenik gabe.

- Zk. ord. du
- Zk.gaitik ord.

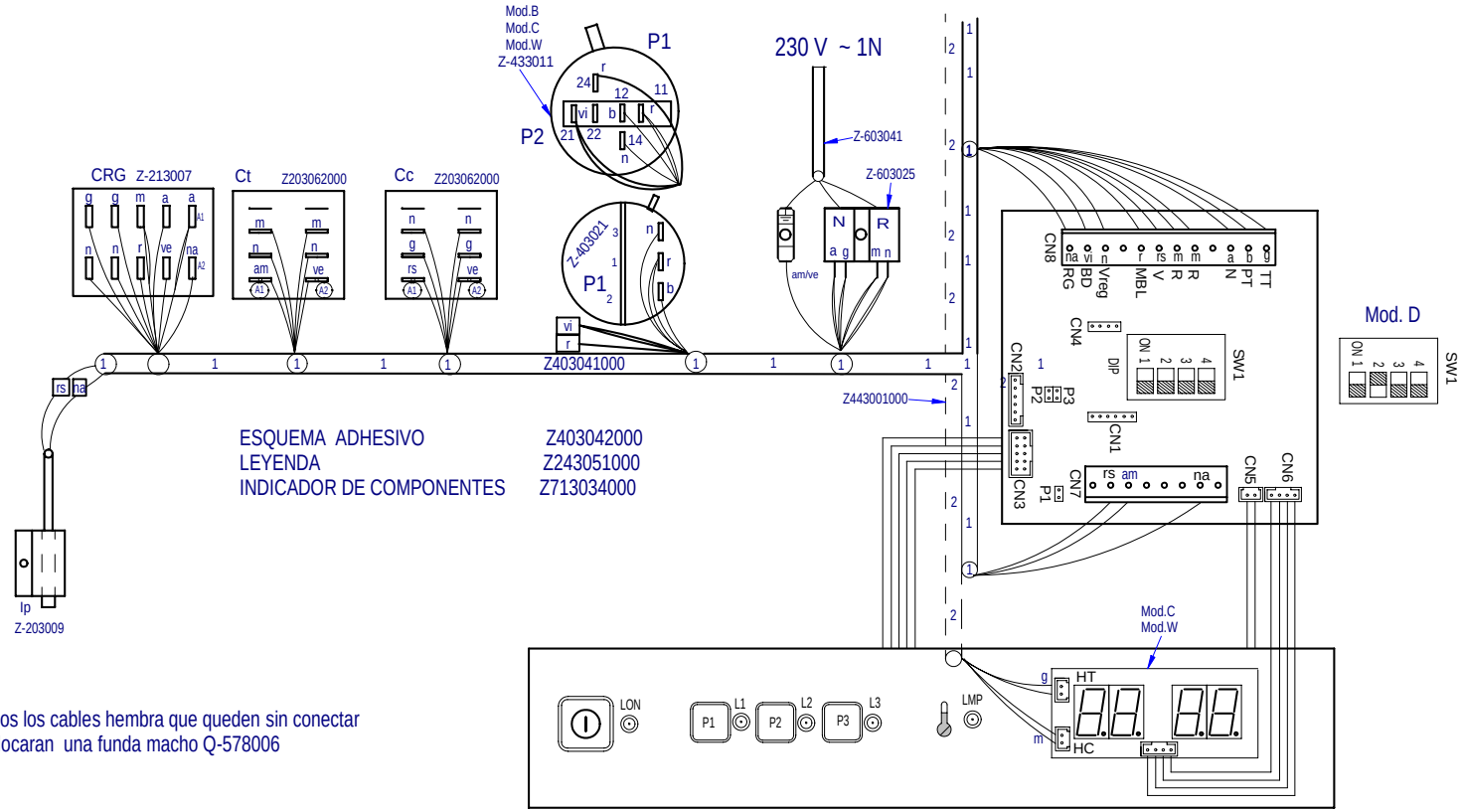


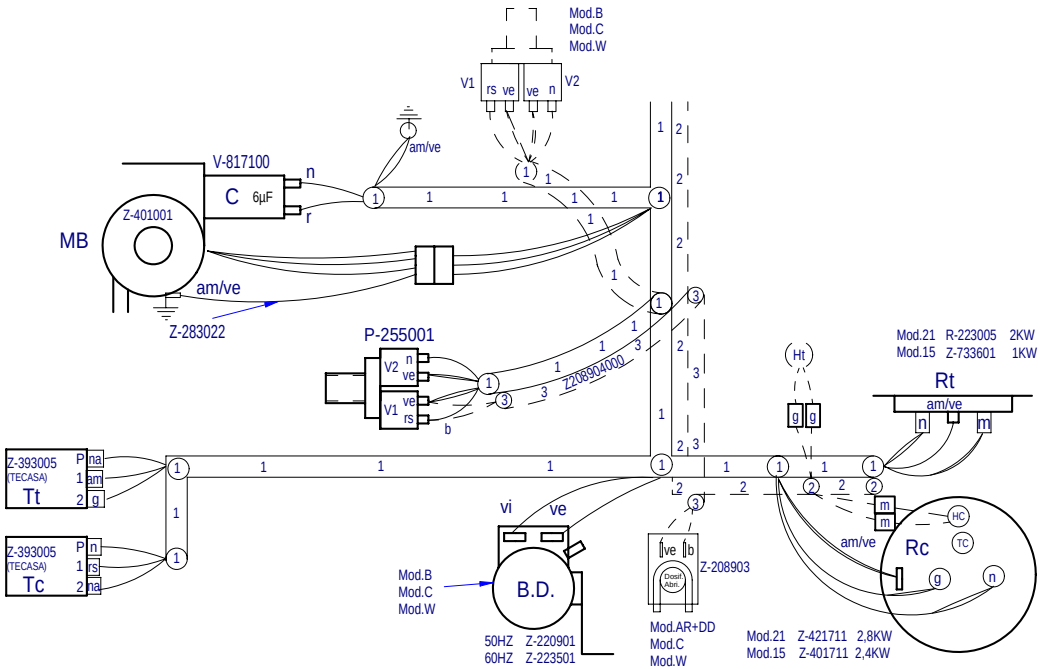


| | | | | | |
|---|---|---|---|---|---|
| | Plano montaje LAVAVASOS GICAR | | Z403043000 | | |
| Nº | Pieza | Material | Nº Clasificacion | Acabado | |
| Nº | Modificacion | Propuesta de | Fecha | Tolerancias generales | |
| | | | | <5± / 5–25± / 25–50± / 50–100± / >100± / ○± | |

| | Firma | Fecha |
|---|---|---|
| Dibujado | M.Maillo | 28-05-2009 |
| Proyectado | M.Maillo | 28-05-2009 |
| Comprobado | Z.Altube | 28-05-2009 |
| Escala | | |

FAGOR

Fagor Industrial,Koop.Elk, Mugatua

Mecanizado superficial

# LAVAVASOS

Plano hau ez daiteke erabil ez berrizta gure baimenitz gabe

Plano numero
HC-18214 - 00

Sustituye al Nº

Sustituido por

# LEYENDA APERTURA FRONTAL

| | ESPAÑOL | FRANÇAIS | ENGLISH | DEUTSCH | ITALIANO |
|---|---|---|---|---|---|
| BD | Bomba desagüe | Pompe de vidange | Drain pump | Abflußpumpe | Pompa scarico |
| C 1/2/3 | Condensador | Condensateur | Condenser | Kondensator | Condensatore |
| CMB | Contactor bomba lavado | Contacteur pompe lavage | Wash pump contactor | Kontaktschütz Waschpumpe | Contattore pompa lavaggio |
| Cc 1/2 | Contactor calentamiento calderin | Contacteur chauf. surchauffeur | Boiler heating contactor | Kontaktschütz Boilerheizung | Contattore riscaldamento boiler |
| Ct | Contactor calentamiento tanque | Contacteur chaufage cuve | Tank heating contactor | Kontaktschütz Heizung Tank | Contattore riscaldamento serbatoio |
| CP | Rele puerta | Relais porte | Door relay | Türrelais | Rele porta |
| Ds.Det. | Dosificador detergente | Dosseur de detergent | Detergent doser | Dosierer Spülmittel | Dosatore detersivo |
| E.B | Electrobomba de presion | Electropompe de pression | Electric pressure pump | Elektro-Drucksteigungspumpe | Electropompa pressione |
| IG | Interruptor general | Interrupteur general | Main switch | Hauptschalter | Interruttore generale |
| IP | Micro puerta | Micro porte | Door microswitch | Mikroschalter Tür | Micro porta |
| L1 | Piloto de encendido | Voyant funcionement | Operation light | Betriebsanzeigelampe | Spia accensione |
| L2 | Piloto marcha | Voyant demarrage | Start light | Startanzeigelampe | Spia avvio |
| L3 | Piloto maquina preparada | Voyant machine prêt | Light machine ready | Betriebsbereitschaftsanzeigelampe | Pilota macchina preparata |
| MBL | Bomba lavado | Pompe lavage | Wash pump | Waschpumpe | Pompa lavaggio |
| M | Motor programador | Moteur du programmateur | Motor programmer | Motor Programmiervorrichtung | Motore programmatore |
| M Av. R | Motor program. avance rapido | Moteur du progr.avance rapide | Motor program. rapid advance | Motor Programmiervorrich. schneller Vorlauf | Motore programmatore avanzamento rapido |
| M1 | Micro programador marcha | Micro du programm. de marche | Micro programmer on | Motor Programmiervorrich. Betrieb | Micro programma. di funzionamento |
| M2 | Micro programador lavado | Micro du programm. de lavage | Micro programmer wash | Motor Programmiervorrich. Waschen | Micro programmatore di lavaggio |
| M3 | Micro programador aclarado | Micro du programm. de rinçage | Micro programmer on | Motor Programmiervorrich. Spülen | Micro programmatore di risciacquo |
| M4 | Micro programador Termo-stop | Micro du programm. Termo-stop | Micro programmer Termo-stop | Motor Programmiervorrich. Thermo-Stop | Micro programmatore Termo-stop |
| M5 | Micro programador avance | Micro du programm. avance | Micro programmer advance | Motor Programmiervorrich. Vorlauf | Micro programmatore avanzamento |
| P, P1, P5 | Presostato | Pressostat | Pressure switch | Druckwächter | Pressostato |
| P2, P3, P4 | Presostato limitador | Pressostat de securité | Hi-limit pressure switch | Begrenzer Druckwächter | Pressostato limitatore |
| RC | Resistencia calderin | Resistance surchauffeur | Boiler heating element | Heizwiderstand Boiler | Resistenza boiler |
| RT | Resistencia tanque | Resistance cuve | Tank heater | Heizwiderstand Tank | Resistenza serbatoio |
| Tt | Termostato tanque | Thermostat de cuve | Tank thermostat | Thermostat Tank | Termostato serbatoio |
| TC | Termostato calderin | Thermostat surchauffeur | Boiler thermostat | Thermostat kessel | Termostato boiler |
| TSC | Limitador calderin | Limiteur surchauffeur | Boiler Hi-limit | Begrenzer Boiler | Limitatore boiler |
| TSTP | Termostato termo-stop | Thermostat Termo-stop | Termo-stop Thermostat | Thermostat Termo-stop | Termostato Termo-stop |
| V | Electrovalvula llenado y aclarado | Electrovan. remplissage rinçage | Fill and rinse valve | Elektroventil Füllen und Spülen | Elettroval. riempimento e risciacquo |
| COLOR | COLORES | COULEURS | COLOUR | FARBEN | COLORE |
| a = | Azul | Bleu | Blue | Blau | Blu |
| am = | Amarillo | Jaune | Yellow | Gelb | Giallo |
| am/ve = | Amarillo/verde | Jaune / vert | Yellow / green | Gelb/grün | Giallo/verde |
| b = | Blanco | Blanc | White | Weiß | Bianco |
| g = | Gris | Gris | Grey | Grau | Grigio |
| m = | Marrón | Marron | Brown | Braun | Marrone |
| n = | Negro | Noir | Black | Schwarz | Nero |
| na = | Naranja | Orange | Orange | Orange | Arancio |
| r = | Rojo | Rouge | Red | Rot | Rosso |
| rs = | Rosa | Rose | Pink | Rosa | Roseo |
| ve = | Verde | Vert | Green | Grün | Verde |
| vi = | Violeta | Violet | Purple | Violett | Viola |

Z243051000