DR. ZANOLLI s.r.l.
Via Casa Quindici, 22
37060 Caselle di Sommacampagna (Verona) Italy
Tel +39 045 8581500 (r.a.)
Fax +39 045 8581455
Web: www.zanolli.it • e-mail: zanolli@zanolli.it



ROLLER P 30 PVC
ROLLER P 40 PVC

ROLLER P 30 INOX
ROLLER P 40 INOX
ROLLER P 45 INOX

Rev. 0.0 del 18/06/08

Roller P30T÷P40T

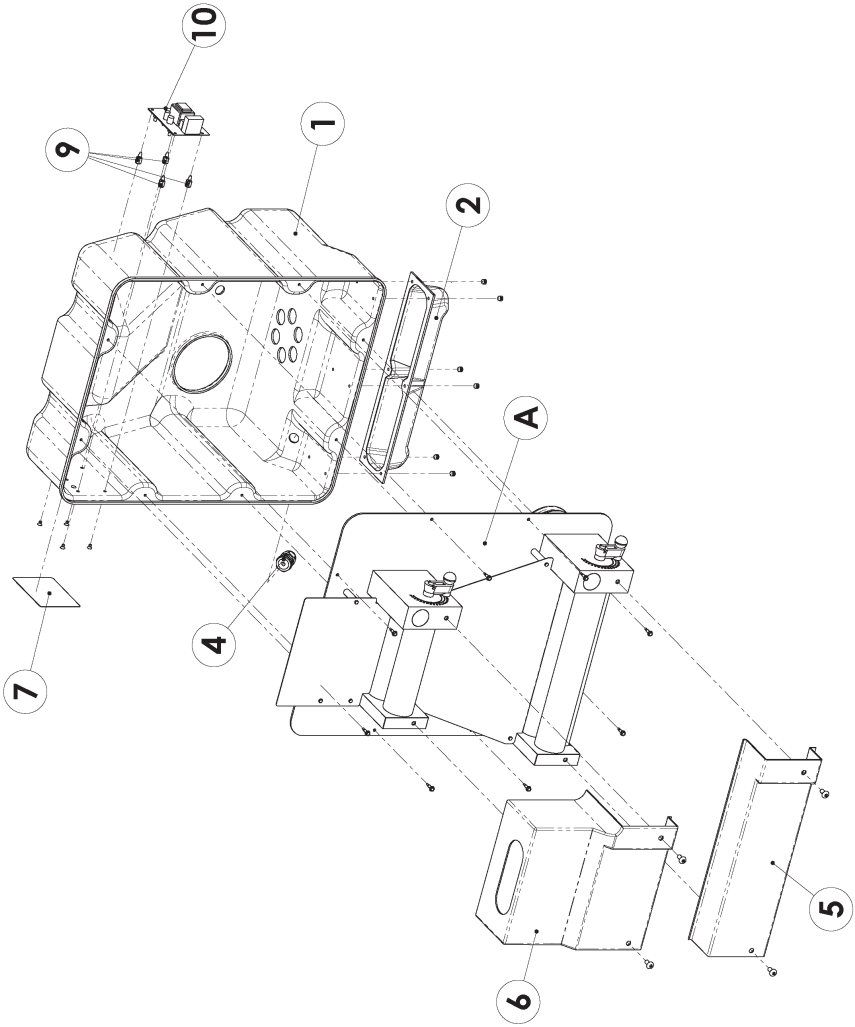

Detail A

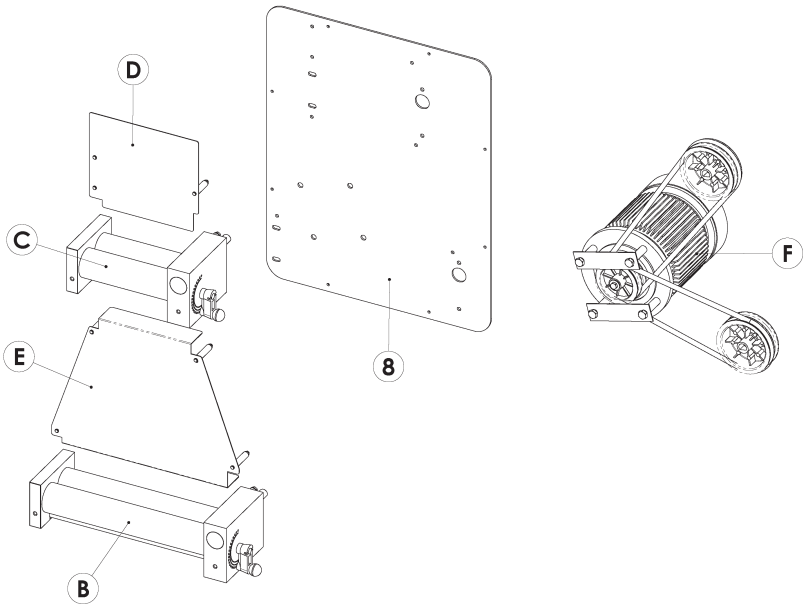

Detail B

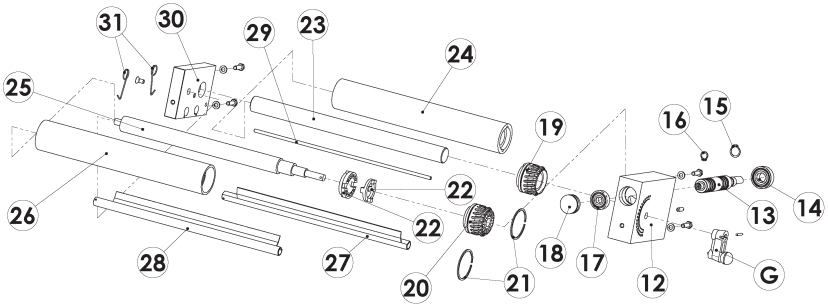

Detail C

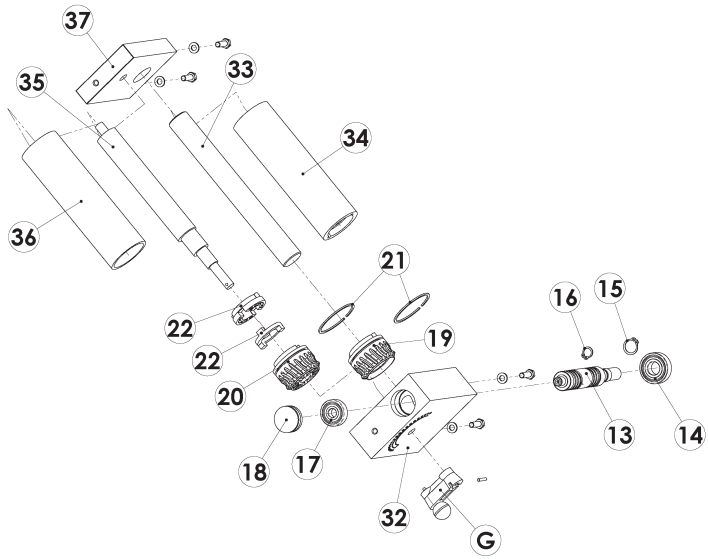

Detail D

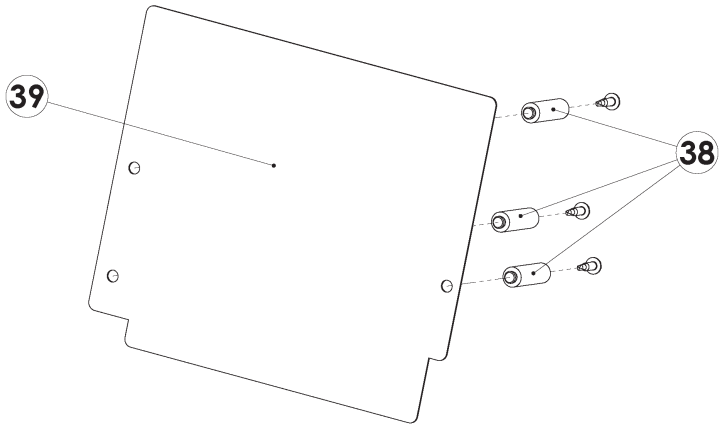

Detail E

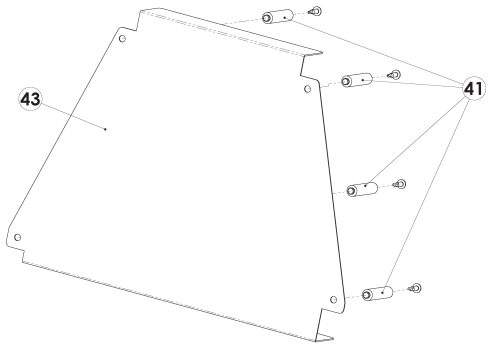

Detail F

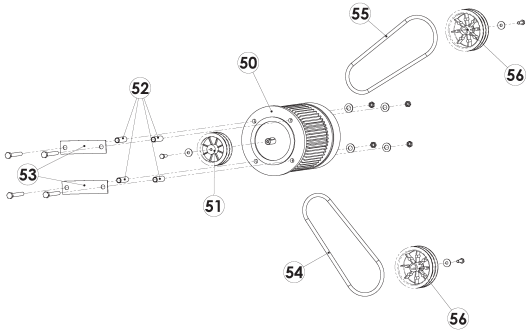

Detail G

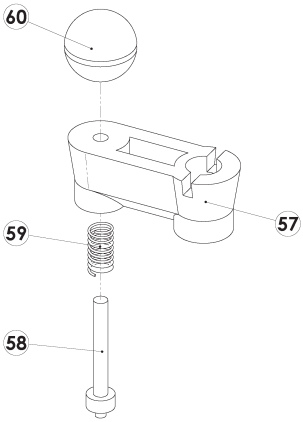

Detail H

Roller P30TA÷P40TA÷P45TA

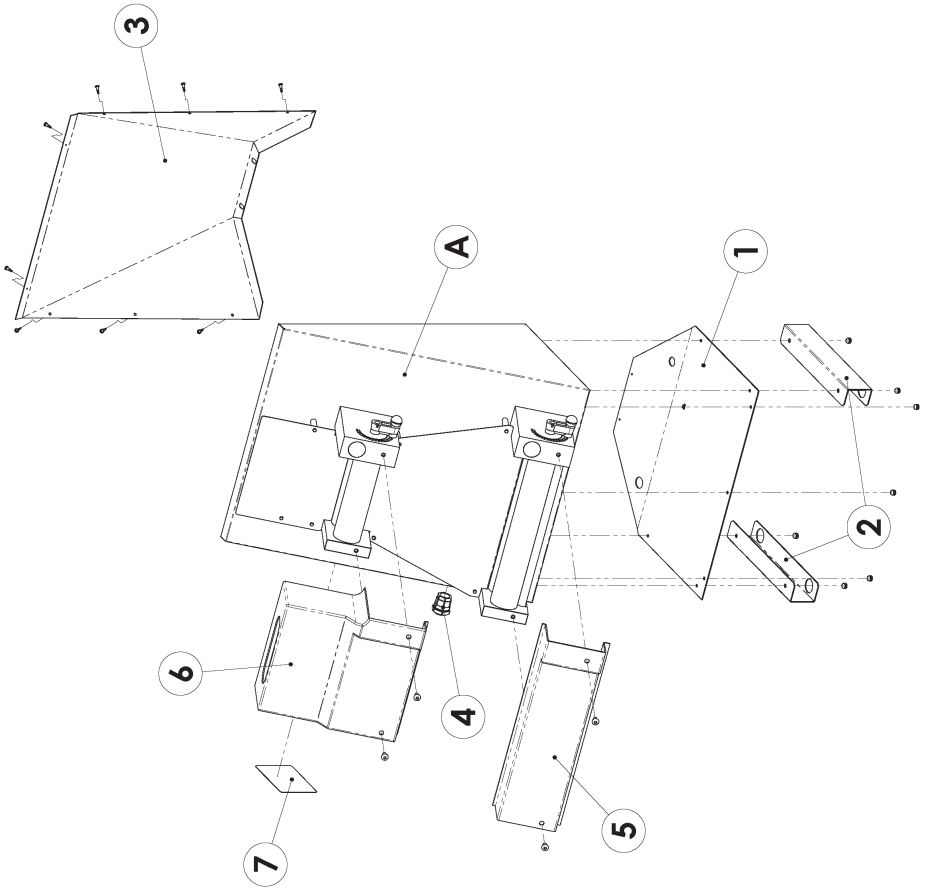

Detail A

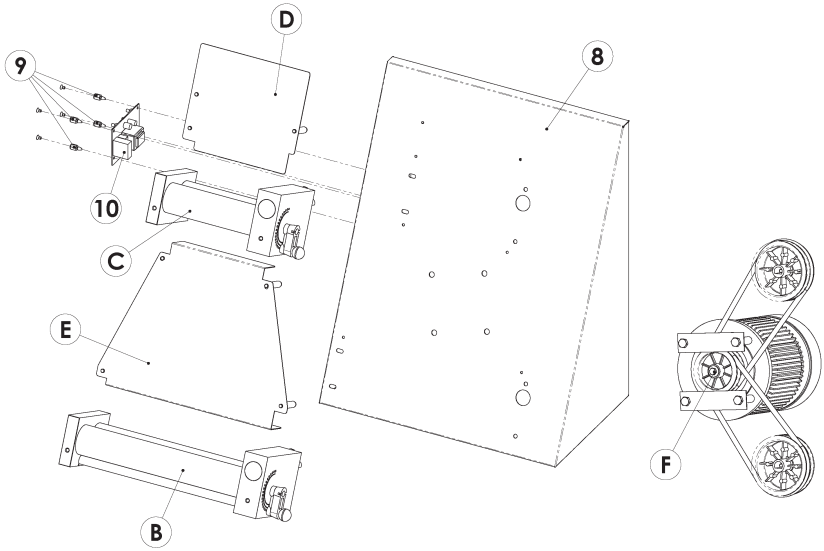

Detail B

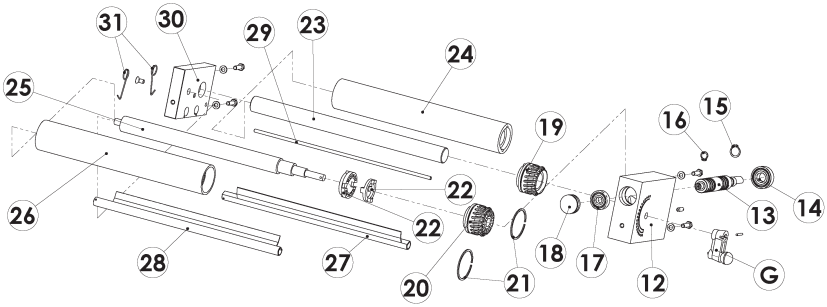

Detail C

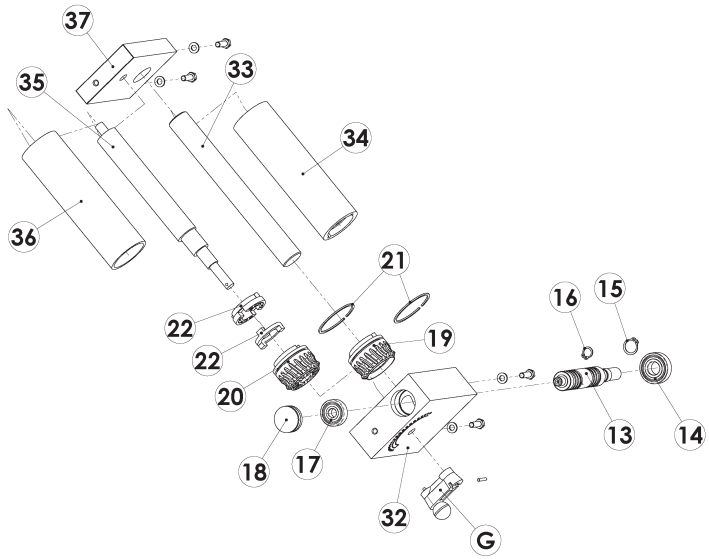

Detail D

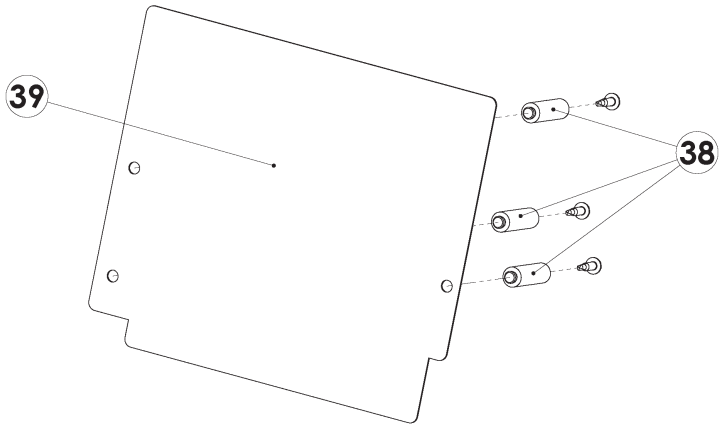

Detail E

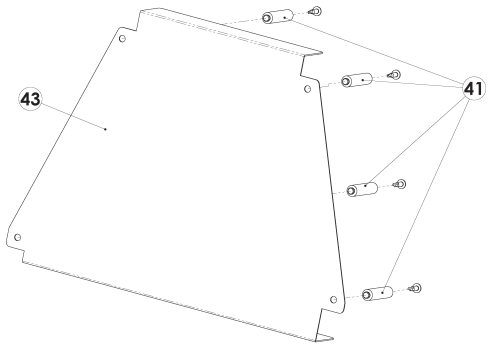

Detail F

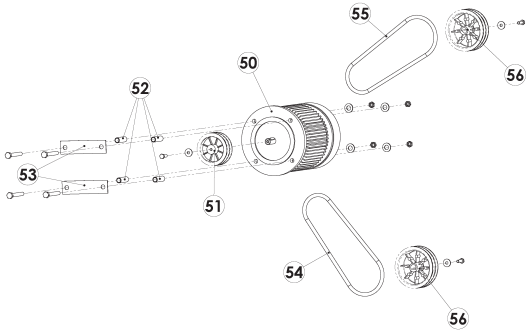

Detail G

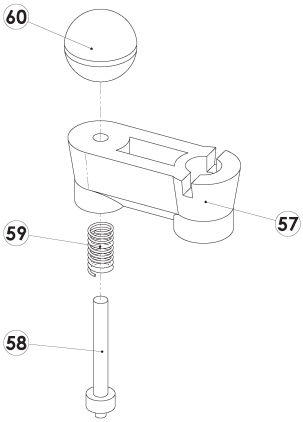

Detail H

MODEL	P30T	P30TA	P40T		P40TA	P45TA	
POSITION No.	CODE	CODE	CODE		CODE	CODE	
1	4100020	4104090	4100050		4104110	RM00080	
2	4100200	4100240	4100320		4100210	4100130	
3		4104200			4104230	RM00070	
4	5581000	5581000	5581000		5581000	5581000	
5	4100070	4100070	4100450		4100450	4100480	
6	4100060	4100060	4100380		4100380	4100380	
7	5800370	5800370	5800370		5800370	5800370	
8	4050010	4100310	4050060		4100600	4100620	
9	5320750	5320750	5320750		5320750	5320750	
10	5310000	5310000	5310000		5310000	5310000	
11							
12	3004200	3004200	3004200		3004200	3003570	
13	3003650	3003650	3003650		3003650	3004350	
14	5093100	5093100	5093100		5093100	5093100	
15	5203200	5203200	5203200		5203200	5203200	
16	5203100	5203100	5203100		5203100	5203100	
17	5093000	5093000	5093000		5093000	5093000	
18	4203100	4203100	4203100		4203100	4203100	
19	3203510	3203510	3203510		3203510	3203510	
20	3203410	3203410	3203410		3203410	3203410	
21	5003010	5003010	5003010		5003010	5003010	
22	4203250	4203250	4203250		4203250	4203250	
23	3004100	3004100	3003350		3003350	3004120	
24	3003900	3003900	3003950		3003950	3003930	
25	3004000	3004000	3004050		3004050	3004110	
26	3003800	3003800	3003850		3003850	3003920	
27	4001010	4001010	4001030		4001030	4100050	
28	4001020	4001020	4001040		4001040	4100060	
29	3100400	3100400	3100500		3100500	3100600	
30	3004300	3004300	3004300		3004300	3003560	
31	4000500	4000500	4000500		4000500	4000500	
32	3003400	3003400	3003450		3003450	3003450	
33	3003300	3003300	3004100		3004100	3004100	
34	3003100	3003100	3003180		3003180	3003180	
35	3003200	3003200	3004000		3004000	3004000	
36	3003000	3003000	3003160		3003160	3003160	
37	3003410	3003410	3003550		3003550	3003550	
38	3002460	3002460	3002460		3002460	3002460	
39	4050130	4050130	4050160		4050160	4050160	
40							
41	3002470	3002470	3002470		3002470	3002470	
42							
43	4050230	4050230	4050260		4050260	4050110	
44							
45							
46							
47							
48							
49							
50	5420200	5420200	5420300		5420300	5420300	
51	3150080	3150080	3150080		3150080	3150080	
52	3002400	3002400	3002400		3002400	3002400	
53	3050810	3050810	3050810		3050810	3050810	
54	5070050	5070080	5070050		5070010	5070010	
55	5070160	5070090	5070220		5070010	5070010	
56	3150030	3150030	3150030		3150030	3150030	
57	4203000	4203000	4203000		4203000	4203000	
58	3003700	3003700	3003700		3003700	3003700	
59	5163010	5163010	5163010		5163010	5163010	
60	5873100	5873100	5873100		5873100	5873100	
OPTIONAL	2300020	Pedal PML with cable 2x0.75					