DESPIECE TECNICO

# Marmitas a gas
# Marmites á gaz
# Gas boling pans
# Gas -Kochkessel
# Pentole a gas
# Marmitas a gás

## GAMA 900

**Modelos:**

**MG9-10**
**MG9-15**
**MG9-20**
**MG9-10 S**
**MG9-15 S**
**MG9-20 S**

***Marzo 2009 March***

***Revisado Septiembre 2010***

FAGOR

**Fagor Industrial**

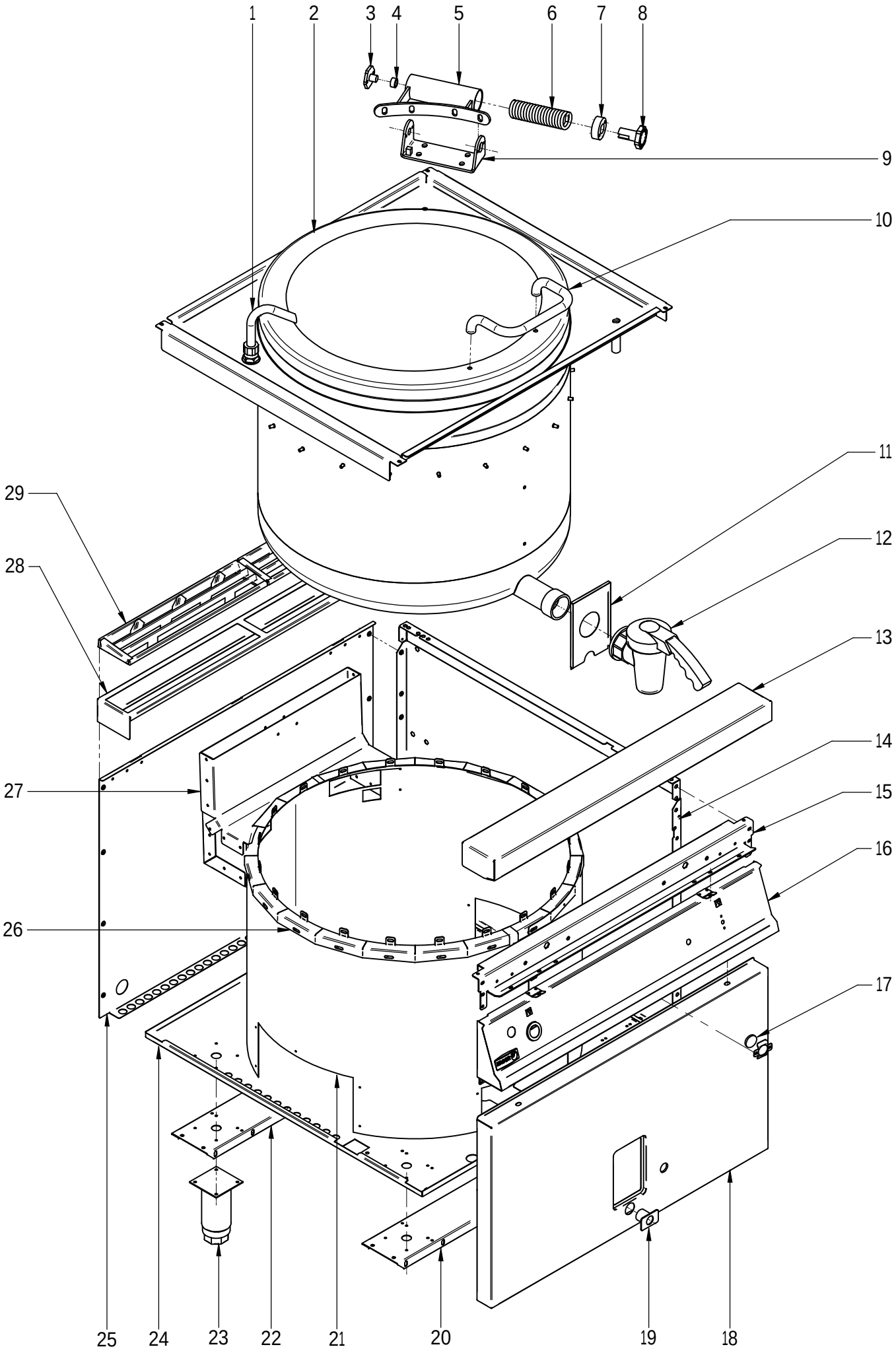


| N plano | Firma | Fecha | Aparato | MUEBLE | Lamina | |
|---|---|---|---|---|---|---|
| C-2250 | | 2009-03 | MARMITAS MG9-10; 9-15; 9-20 | | 1 | Fagor Industrial S.Coop. FAGOR Oñate |

| MOD. | MARMITAS GAMA 900/ PAN 900 RANGE | ZONA | MUEBLE / UNIT | PLANO | C-2250 |
|---|---|---|---|---|---|

| ITEM | CODIGO | DENOMINACION | TEXTO | MG9-10 | MG9-10 S | MG9-15 | MG9-15 S | MG9-20 | MG9-20 S | | | NOTAS |
|---|---|---|---|---|---|---|---|---|---|---|---|---|
| 1 | S052100000 | TUBO LLENADO 01102113 | FILLER PIPE 01102113 | 1 | 1 | 1 | 1 | 1 | 1 | | | |
| 2 | S106125000 | CUBA+TAPA G MG9-10 | TUB+COVER G MG9-10 | 1 | 1 | _ | _ | _ | _ | | | |
| 2 | S036159000 | CUBA+TAPA G MG9-15 | TUB+COVER G MG9-15 | _ | _ | 1 | 1 | _ | _ | | | |
| 2 | S256113000 | CUBA+TAPA G MG9-20 | TUB+COVER G MG9-20 | _ | _ | _ | _ | 1 | 1 | | | |
| S/Nº | S106126000 | CUBA COMPLETA MG9-10 | COMPLETE TUB MG9-10 | 1 | 1 | _ | _ | _ | _ | | | |
| S/Nº | S036160000 | CUBA COMPLETA MG9-15 | COMPLETE TUB MG9-15 | _ | _ | 1 | 1 | _ | _ | | | |
| S/Nº | S256114000 | CUBA COMPLETA MG9-20 | COMPLETE TUB MG9-20 | _ | _ | _ | _ | 1 | 1 | | | |
| S/Nº | S036141000 | TAPA COMPLETA | COMPLETE COVER | 1 | 1 | 1 | 1 | 1 | 1 | | | |
| S/Nº | S016101000 | FILTRO DE CUBA | TUB FILTER | 1 | 1 | 1 | 1 | 1 | 1 | | | |
| | S036117000 | SOPORTE FILTRO | FILTER SUPPORT | 2 | 2 | 2 | 2 | 2 | 2 | | | |
| | Q412000000 | REMACHE TUBULAR 4x8 | TUBULAR RIVET 4x8 | 8 | 8 | 8 | 8 | 8 | 8 | | | |
| 3 | S116119000 | GIRO DE ASA | HANDLE ROTATION | 1 | 1 | 1 | 1 | 1 | 1 | | | |
| | Q012041000 | TORNILLO EXAGONAL M6x10 A304 | HEXAGONAL BOLT M6x10 A304 | 2 | 2 | 2 | 2 | 2 | 2 | | | |
| 4 | S116126000 | COJINETE CILINDRICO | CYLINDRICAL BEARING | 1 | 1 | 1 | 1 | 1 | 1 | | | |
| 5 | S036143000 | BISAGRA COMPLETA | COMPLETE HINGE | 1 | 1 | 1 | 1 | 1 | 1 | | | |
| 6 | S116121000 | RESORTE TAPA 07199 | SPRING COVER 07199 | 1 | 1 | 1 | 1 | 1 | 1 | | | |
| 7 | S116118000 | CASQUILLO | BUSHING | 1 | 1 | 1 | 1 | 1 | 1 | | | |
| 8 | S116120000 | TENSOR MUELLE | TENSIONING SPRING | 1 | 1 | 1 | 1 | 1 | 1 | | | |
| | Q012042000 | TORNILLO EXAGONAL M6x15 | HEXAGONAL BOLT M6x15 | 2 | 2 | 2 | 2 | 2 | 2 | | | |
| | Q262040000 | ARANDELA GROW. A6 A304 | WASHER GROW. A6 A304 | 2 | 2 | 2 | 2 | 2 | 2 | | | |
| 9 | S036131000 | SOPORTE BISAGRA COMPLETA | COMPLETE HINGE SUPPORT | 1 | 1 | 1 | 1 | 1 | 1 | | | ELIMINADO 03.05.10 |
| 9 | S226136000 | SOPORTE BISAGRA COMPLETA | COMPLETE HINGE SUPPORT | 1 | 1 | 1 | 1 | 1 | 1 | | | INTRODUCIDO 03.05.10 |
| S/Nº | S026102000 | REFUERZO BISAGRA MARMITAS | COOK. POT HINGE REINFORCE. | 1 | 1 | 1 | 1 | 1 | 1 | | | |
| | Q232050000 | ARANDELA A8 | WASHER A8 | 4 | 4 | 4 | 4 | 4 | 4 | | | |
| | Q262050000 | ARANDELA GROW. A8 A304 | WASHER GROW. A8 A304 | 4 | 4 | 4 | 4 | 4 | 4 | | | |
| | Q212051000 | TUERCA SOMBRERO M8 | COWL NUT M8 | 4 | 4 | 4 | 4 | 4 | 4 | | | |
| 10 | S036123000 | ASA DE TAPA | COVER HANDLE | 1 | 1 | 1 | 1 | 1 | 1 | | | |
| | Q012053000 | TORNILLO EXAGONAL M8x20 A304 | HEXAGONAL BOLT M8x20 A304 | 2 | 2 | 2 | 2 | 2 | 2 | | | |
| | Q302027000 | ARANDELA 25x8,4x2 | WASHER 25X8.4X2 | 2 | 2 | 2 | 2 | 2 | 2 | | | |
| | | | | | | | | | | | | |
| | | | | | | | | | | | | |

| MOD. | MARMITAS GAMA 900/ PAN 900 RANGE | ZONA | MUEBLE / UNIT | PLANO | C-2250 |
|---|---|---|---|---|---|

| ITEM | CODIGO | DENOMINACION | TEXTO | MG9-10 | MG9-10 S | MG9-15 | MG9-15 S | MG9-20 | MG9-20 S | | | NOTAS |
|---|---|---|---|---|---|---|---|---|---|---|---|---|
| 11 | S112803000 | CUBIERTA GRIFO MG-900 | TAP COVER MG-900 | 1 | 1 | 1 | 1 | _ | _ | | | |
| 11 | S252804000 | CUBIERTA GRIFO MG-920 | TAP COVER MG-920 | _ | _ | _ | _ | 1 | 1 | | | |
| | S112105000 | MUELLE SOPORTE CUBIERTA | COVER SUPPORT SPRING | 1 | 1 | 1 | 1 | 1 | 1 | | | |
| 12 | S102125000 | GRIFO VACIADO 2" | DRAINAGE TAP 2" | 1 | 1 | 1 | 1 | 1 | 1 | | | |
| 13 | S105402000 | ANTERIOR DE MESA 1M | BENCH FRONT 1M | 1 | _ | 1 | _ | 1 | _ | | | |
| | Q152004000 | TORNILLO APLAST. M5x13 A304 | MUSHROOM HEAD BOLT M5x13 A | 2 | _ | 2 | _ | 2 | _ | | | |
| | Q302022000 | ARANDELA 16x6x1,2 A304 | WASHER 16x6x1.2 A304 | 2 | _ | 2 | _ | 2 | _ | | | |
| 14 | X162814000 | PANEL LATERAL DERECHO G900 | RIGHT SIDE PANEL G900 | 1 | _ | 1 | _ | 1 | _ | | | |
| 14 | S142806000 | PANEL LATERAL DERECH. G9-00S | RIGHT SIDE PANEL G9-00S | _ | 1 | _ | _ | _ | _ | | | |
| 14 | S222808000 | PANEL LATERAL DERECH. G9-00S | RIGHT SIDE PANEL G9-00S | _ | _ | _ | 1 | _ | 1 | | | |
| S/Nº | X162813000 | PANEL LATERAL IZQUIERDO G900 | LEFT SIDE PANEL G900 | 1 | _ | 1 | _ | 1 | _ | | | |
| S/Nº | S142805000 | PANEL LATERAL IZQUIERD. G900S | LEFT SIDE PANEL G900S | _ | 1 | _ | _ | _ | _ | | | |
| S/Nº | S222807000 | PANEL LATERAL IZQUIERD. G915S | LEFT SIDE PANEL G915S | _ | _ | _ | 1 | _ | 1 | | | |
| | Q221343000 | REMACHE EXAGONAL M6 | HEXAGONAL RIVET M6 | 22 | _ | 22 | _ | 22 | _ | | | |
| | Q221342000 | REMACHE EXAGONAL M5 | HEXAGONAL RIVET M5 | 12 | 12 | 12 | 12 | 12 | 12 | | | |
| | Q012053000 | TORNILLO EXAGONAL M8x20 A304 | HEXAGONAL BOLT M8x20 A304 | 4 | _ | 4 | _ | 4 | _ | | | |
| | Q012031000 | TORNILLO EXAGONAL M5x10 A304 | HEXAGONAL BOLT M5x10 A304 | _ | 2 | _ | 2 | _ | 2 | | | |
| 15 | S222606000 | ESCUADRA INTE. ANT. MESA 1M | BENCH FRONT INT BRACKET 1M | 1 | 1 | 1 | 1 | 1 | 1 | | | |
| | Q221342000 | REMACHE EXAGONAL M5 | HEXAGONAL RIVET M5 | 7 | 7 | 7 | 7 | 7 | 7 | | | |
| | Q012032000 | TORNILLO EXAGONAL M5X15 | HEXAGONAL BOLT M5x15 | 6 | 6 | 6 | 6 | 6 | 6 | | | |
| 16 | S222809000 | PORTAMANDOS MARMITA 1M | PAN CONTROL HOLDER 1M | 1 | 1 | 1 | 1 | 1 | 1 | | | |
| | Q152004000 | TORNILLO APLAST. M5x13 A304 | MUSHROOM HEAD BOLT M5x13 A | 4 | 4 | 4 | 4 | 4 | 4 | | | |
| | Q221343000 | REMACHE EXAGONAL M6 | HEXAGONAL RIVET M6 | 2 | 2 | 2 | 2 | 2 | 2 | | | |
| | Q151336000 | TORNILLO SOPORTE GUIAS | GUIDE SUPPORT BOLT | 2 | 2 | 2 | 2 | 2 | 2 | | | |
| | Q302022000 | ARANDELA 16x6x1,2 A304 | WASHER 16x6x1.2 A304 | 2 | 2 | 2 | 2 | 2 | 2 | | | |
| | U022836000 | ESCUDO FAGOR | FAGOR EMBLEM | 1 | 1 | 1 | 1 | 1 | 1 | | | |
| | Q221023000 | CLIP SUJECIÓN RÁPIDA Ø 5 | RAPID FASTENING CLIP Ø5 | 2 | 2 | 2 | 2 | 2 | 2 | | | |
| 17 | 9294600000 | MIRILLA CRISTAL | INSPECTION WINDOW | 1 | 1 | 1 | 1 | 1 | 1 | | | |
| S/Nº | S312617000 | TAPA MIRILLA | INSPECTION WINDOW COVER | 1 | 1 | 1 | 1 | 1 | 1 | | | |
| | Q221342000 | REMACHE EXAGONAL M5 | HEXAGONAL RIVET M5 | 2 | 2 | 2 | 2 | 2 | 2 | | | |
| | Q012031000 | TORNILLO EXAGONAL M5x10 A304 | HEXAGONAL BOLT M5x10 A304 | 2 | 2 | 2 | 2 | 2 | 2 | | | |

| MOD. | MARMITAS GAMA 900/ PAN 900 RANGE | | ZONA | MUEBLE / UNIT | | | | | | PLANO | C-2250 | |
|---|---|---|---|---|---|---|---|---|---|---|---|---|
| ITEM | CODIGO | DENOMINACION | TEXTO | MG9-10 | MG9-10 S | MG9-15 | MG9-15 S | MG9-20 | MG9-20 S | | | NOTAS |
| 18 | S102810000 | PANEL FRONTAL MG9-10 | FRONT PANEL MG9-10 | 1 | _ | _ | _ | _ | _ | | | |
| 18 | S102812000 | PANEL FRONTAL MG9-10S | FRONT PANEL MG9-10S | _ | 1 | _ | _ | _ | _ | | | |
| 18 | S032808000 | PANEL FRONTAL MG9-15 | FRONT PANEL MG9-15 | _ | _ | 1 | 1 | _ | _ | | | |
| 18 | S252803000 | PANEL FRONTAL MG9-20 | FRONT PANEL MG9-20 | _ | _ | _ | _ | 1 | 1 | | | |
| | Q012042000 | TORNILLO EXAGONAL M6x15 | HEXAGONAL BOLT M6x15 | 2 | 2 | 2 | 2 | 2 | 2 | | | |
| | Q302022000 | ARANDELA 16x6x1,2 A304 | WASHER 16x6x1.2 A304 | 2 | 2 | 2 | 2 | 2 | 2 | | | |
| 19 | S112804000 | EMBELLECEDOR TUBO | PIPE TRIM | 1 | 1 | 1 | 1 | 1 | 1 | | | |
| | Q221324000 | TUERCA 3/4 GAS | NUT 3/4 GAS | 1 | 1 | 1 | 1 | 1 | 1 | | | |
| 20 | S102610000 | LISTON SOPORTE PATAS ANT. 1M | FRONT LEG SUPPORT STRIP 1M | 1 | _ | 1 | _ | 1 | _ | | | |
| 21 | S102605000 | ENVOLVENTE MG9-10 | ENCLOSURE MG9-10 | 1 | _ | _ | _ | _ | _ | | | |
| 21 | S102621000 | ENVOLVENTE MG9-10 S | ENCLOSURE MG9-10 S | _ | 1 | _ | _ | _ | _ | | | |
| 21 | S032655000 | ENVOLVENTE MG9-15 | ENCLOSURE MG9-15 | _ | _ | 1 | 1 | _ | _ | | | |
| 21 | S252604000 | ENVOLVENTE MG9-20 | ENCLOSURE MG9-20 | _ | _ | _ | _ | 1 | 1 | | | |
| | Q151323000 | TORNILLO BROCA 4,8X16 | DRILL BIT SCREW 4.8X16 | 27 | 27 | 27 | 27 | 27 | 27 | | | |
| 22 | S102611000 | LISTON SOPORTE PATAS POS.1M | REAR LEG SUPPORT STRIP 1M | 1 | _ | 1 | _ | 1 | _ | | | |
| | Q012042000 | TORNILLO EXAGONAL M6x15 | HEXAGONAL BOLT M6x15 | 8 | _ | 8 | _ | 8 | _ | | | |
| | Q302022000 | ARANDELA 16x6x1,2 A304 | WASHER 16x6x1.2 A304 | 8 | _ | 8 | _ | 8 | _ | | | |
| | Q232040000 | ARANDELA A6 | WASHER A6 | 8 | _ | 8 | _ | 8 | _ | | | |
| 23 | X260151000 | PATA REGULABLE | ADJUSTABLE LEG | 4 | _ | 4 | _ | 4 | _ | | | |
| | Q411304000 | REMACHE AVIBULB Ø4,8 | AVIBULB RIVET Ø4.8 | 16 | _ | 16 | _ | 16 | _ | | | |
| 24 | S222620000 | BASE INFERIOR | LOWER BASE | 1 | _ | 1 | _ | 1 | _ | | | |
| 24 | S142617000 | BASE INFERIOR MG9-10 S | LOWER BASE MG9-10 S | _ | 1 | _ | _ | _ | _ | | | |
| 24 | S222640000 | BASE INFERIOR S | LOWER BASE S | _ | _ | _ | 1 | _ | 1 | | | |
| | Q221343000 | REMACHE EXAGONAL M6 | HEXAGONAL RIVET M6 | 2 | 2 | 2 | 2 | 2 | 2 | | | |
| | Q162040000 | TUERCA EXAGONAL M6 | HEXAGONAL NUT M6 | 4 | _ | 4 | _ | 4 | _ | | | |
| 25 | U562853000 | PANEL POSTERIOR 1M G9-00 | REAR PANEL 1M G9-00 | 1 | _ | 1 | _ | 1 | _ | | | |
| 25 | X242817000 | PANEL POSTERIOR 1M G9-10S | REAR PANEL 1M G9-10S | _ | 1 | _ | _ | _ | _ | | | |
| 25 | S372816000 | PANEL POSTERIOR 1M G9-15 S | REAR PANEL 1M G9-15 S | _ | _ | _ | 1 | _ | 1 | | | |
| | Q419005000 | REMACHE 4x8 ALMG3 / ALUMINIO | RIVET 4X8 ALMG3 / ALUMINIUM | 8 | 8 | 8 | 8 | 8 | 8 | | | |
| | | | | | | | | | | | | |
| | | | | | | | | | | | | |

| MOD. | MARMITAS GAMA 900/ PAN 900 RANGE | | ZONA | MUEBLE / UNIT | | | | | | PLANO | C-2250 | |
|---|---|---|---|---|---|---|---|---|---|---|---|---|
| ITEM | CODIGO | DENOMINACION | TEXTO | MG9-10 | MG9-10 S | MG9-15 | MG9-15 S | MG9-20 | MG9-20 S | | | NOTAS |
| 26 | S102609000 | VIROLA MG900 FG | SHELL MG900 FG | 2 | 2 | 2 | 2 | _ | _ | | | |
| 26 | S102616000 | VIROLA MG900 BM | SHELL MG900 BM | _ | _ | _ | _ | 2 | 2 | | | |
| | Q162040000 | TUERCA EXAGONAL M6 | HEXAGONAL NUT M6 | 20 | 20 | 20 | 20 | 20 | 20 | | | |
| | Q302022000 | ARANDELA 16x6x1,2 A304 | WASHER 16x6x1.2 A304 | 20 | 20 | 20 | 20 | 20 | 20 | | | |
| 27 | S032653000 | ANTERIOR CHIMENEA MG9-10 | FLUEPIPE FRONT MG9-10 | 1 | 1 | 1 | 1 | _ | _ | | | |
| 27 | S022655000 | ANTERIOR CHIMENEA | FRONT FLUEPIPE | _ | _ | _ | _ | 1 | 1 | | | |
| 27A | S032641000 | AMARRE LATERALCHIMENEA | FLUEPIPE SIDE FASTENING | 2 | 2 | 2 | 2 | _ | _ | | | |
| 27A | S022654000 | AMARRE LATERALCHIMENEA | FLUEPIPE SIDE FASTENING | _ | _ | _ | _ | 2 | 2 | | | |
| 27B | S032652000 | POSTERIOR CHIMENEA | REAR FLUEPIPE | 1 | 1 | 1 | 1 | _ | _ | | | |
| 27B | S022653000 | POSTERIOR CHIMENEA | REAR FLUEPIPE | _ | _ | _ | _ | 1 | 1 | | | |
| 27C | S035400000 | PROTECTOR CHIMENEA | FLUEPIPE PROTECTOR | 1 | 1 | 1 | 1 | _ | _ | | | |
| 27D | S022656000 | DISTANCIADOR CHIMENEA | FLUEPIPE SPACER | _ | _ | _ | _ | 1 | 1 | | | |
| | Q419005000 | REMACHE 4X8 ALMG3 / ALUMINIO | RIVET 4X8 ALMG3 / ALUMINIUM | 24 | 24 | 24 | 24 | 24 | 24 | | | |
| | Q151323000 | TORNILLO BROCA 4,8X16 | DRILL BIT SCREW 4.8X16 | 4 | 4 | 4 | 4 | 4 | 4 | | | |
| 28 | R205439000 | SOPORTE EMBELLECEDOR 1M | TRIM SUPPORT 1M | 1 | 1 | 1 | 1 | 1 | 1 | | | |
| 29 | R205425000 | EMBELLECEDOR ESMALTE | ENAMEL TRIM | 2 | 2 | 2 | 2 | 2 | 2 | | | |

N plano
C-2251

Firma

Fecha
2009-03

Aparato
MARMITAS MG9-10; 9-15; 9-20

CONJUNTO FUNCIONAL

Lamina
2

Fagor Industrial S.Coop.
Onate

FAGOR

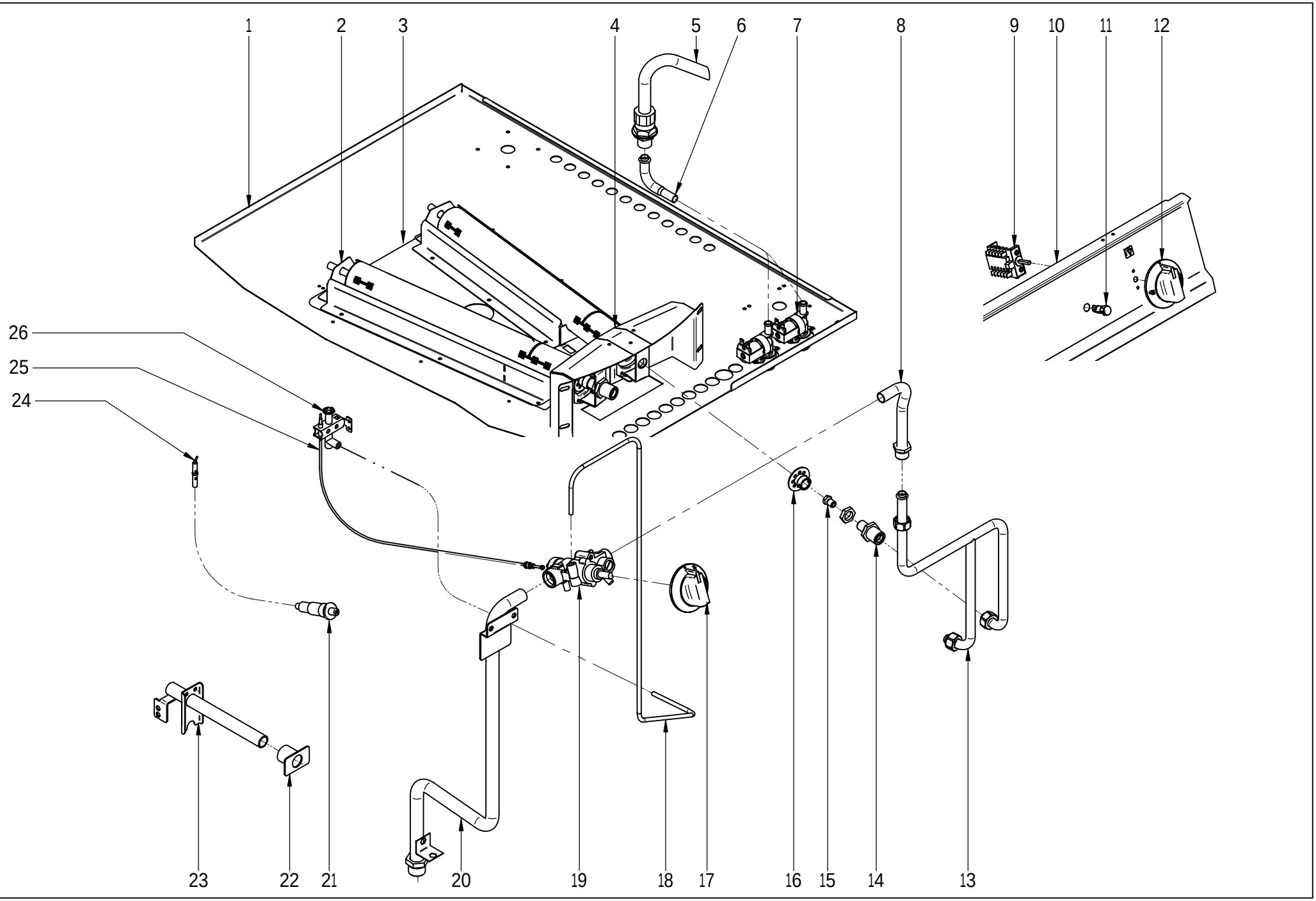

| MOD. | MARMITAS GAMA 900/ PAN 900 RANGE | ZONA | CONJUNTO FUNCIONAL / FUNCTIONAL UNIT | PLANO | C-2251 |
|---|---|---|---|---|---|

| ITEM | CODIGO | DENOMINACION | TEXTO | MG9-10 | MG9-10 S | MG9-15 | MG9-15 S | MG9-20 | MG9-20 S | | | NOTAS |
|---|---|---|---|---|---|---|---|---|---|---|---|---|
| 1 | S222620000 | BASE INFERIOR | LOWER BASE | 1 | _ | 1 | _ | 1 | _ | | | |
| 1 | S142617000 | BASE INFERIOR MG9-10 S | LOWER BASE MG9-10 S | _ | 1 | _ | _ | _ | _ | | | |
| 1 | S222640000 | BASE INFERIOR S | LOWER BASE S | _ | _ | _ | 1 | _ | 1 | | | |
| 2 | S225701000 | QUEMADOR DE POLIDORO MG900 | POLIDORO BURNER MG900 | 2 | 2 | 2 | 2 | 2 | 2 | | | |
| | Q012021000 | TORNILLO EXAGONAL M4x10 A304 | HEXAGONAL BOLT M4x10 A304 | 8 | 8 | 8 | 8 | 8 | 8 | | | |
| 3 | S102603000 | BASE QUEMADOR MG9-10 | BURNER BASE MG-910 | 1 | _ | _ | _ | _ | _ | | | |
| 3 | S102620000 | BASE QUEMADOR MG-910 S | BURNER BASE MG-910 S | _ | 1 | _ | _ | _ | _ | | | |
| 3 | S032654000 | BASE QUEMADOR MG-915 | BURNER BASE MG-915 | _ | _ | 1 | 1 | _ | _ | | | |
| 3 | S222633000 | BASE QUEMADOR MG-915 BM | BURNER BASE MG-915 BM | _ | _ | _ | _ | 1 | 1 | | | |
| | Q419005000 | REMACHE 4x8 ALMG3 / ALUMINIO | RIVET 4X8 ALMG3 / ALUMINIUM | _ | 10 | 10 | 10 | 10 | 10 | | | |
| S/Nº | S222630000 | DEFLECTOR DCHO. QUEMADOR | RIGHT DEFLECTOR BURNER | 1 | 1 | 1 | 1 | 1 | 1 | | | |
| S/Nº | S222631000 | DEFLECTOR IZDO. QUEMADOR | LEFT DEFLECTOR BURNER | 1 | 1 | 1 | 1 | 1 | 1 | | | |
| 4 | S102606000 | FRONTAL QUEMADOR MG9-10 | BURNER FRONT MG9-10 | 1 | 1 | _ | _ | _ | _ | | | |
| 4 | S032656000 | FRONTAL QUEMADOR MG9-15 | BURNER FRONT MG9-15 | _ | _ | 1 | 1 | _ | _ | | | |
| 4 | S252605000 | FRONTAL QUEMADOR MG9-20 | BURNER FRONT MG9-20 | _ | _ | _ | _ | 1 | 1 | | | |
| | Q221342000 | REMACHE EXAGONAL M5 | HEXAGONAL RIVET M5 | 2 | 2 | 2 | 2 | 2 | 2 | | | |
| | Q221341000 | REMACHE EXAGONAL M4 | HEXAGONAL RIVET M4 | 8 | 8 | 8 | 8 | 8 | 8 | | | |
| 5 | S052100000 | TUBO LLENADO 01102113 | FILLER PIPE 01102113 | 1 | 1 | 1 | 1 | 1 | 1 | | | |
| 6 | S565027000 | TUBO ENTRADA TUBO LLENADO | INTAKE PIPE FILLER PIPE | 1 | 1 | 1 | 1 | 1 | 1 | | | |
| | Q306024000 | JUNTA18X12.5X1.5 | SEAL 18X12.5X1.5 | 1 | 1 | 1 | 1 | 1 | 1 | | | |
| | Q223010000 | TUERCA 1/2 GAS | NUT 1/2 GAS | 1 | 1 | 1 | 1 | 1 | 1 | | | |
| S/Nº | 3676900000 | TUBO GOMA NEGRA Ø 17*10 | BLACK RUBBER PIPE 17*10 | 3 | 3 | 3 | 3 | 3 | 3 | | | |
| | Q881308000 | ABRAZADERA 8-14L | CLAMP 8-14L | 6 | 6 | 6 | 6 | 6 | 6 | | | |
| S/Nº | Z201106000 | RACORD EN Y | Y-CONNECTION | 1 | 1 | 1 | 1 | 1 | 1 | | | |
| 7 | Z701135000 | ELECTROVALVULA SIMP. 220V | SIMPLE SOLENOID VALVE 220V | 2 | 2 | 2 | 2 | 2 | 2 | | | |
| | S222645000 | PROT. ELECTROVALVULA M900 | SOLENOID PROTECTION M900 | 1 | 1 | 1 | 1 | 1 | 1 | | | INTRODUCIDO 01.12.09 |
| | S222646000 | TAPA PROTEC. ELECTR. M900 | PROT. COVER SOLENOID M900 | 1 | 1 | 1 | 1 | 1 | 1 | | | INTRODUCIDO 01.12.09 |
| | Z601156000 | REGULADOR 8L RO. 254.034 | REGULATOR 8L RED 254.034 | 2 | 2 | 2 | 2 | 2 | 2 | | | |
| | Q032021000 | TORNILLO ALOMADO M4X10 | CURVED SCREW M4X10 | 4 | 4 | 4 | 4 | 4 | 4 | | | |
| 8 | S565015000 | CONDUCCION CONEXION GRIFO | TAP CONNECTION PIPE | 1 | 1 | 1 | 1 | 1 | 1 | | | |
| | Q306024000 | JUNTA 18X12.5X1.5 | SEAL 18x12.5x1.5 | 3 | 3 | 3 | 3 | 3 | 3 | | | |

| MOD. | MARMITAS GAMA 900/ PAN 900 RANGE | ZONA | CONJUNTO FUNCIONAL / FUNCTIONAL UNIT | PLANO | C-2251 |
|---|---|---|---|---|---|

| ITEM | CODIGO | DENOMINACION | TEXTO | MG9-10 | MG9-10 S | MG9-15 | MG9-15 S | MG9-20 | MG9-20 S | | | NOTAS |
|---|---|---|---|---|---|---|---|---|---|---|---|---|
| 9 | R693004000 | CONMUTADOR DE FUNCIONES | FUNCTIONS SWITCH | 1 | 1 | 1 | 1 | 1 | 1 | | | |
| | Q042022000 | TORNILLO AVELLANADO M4X15 | COUNTERSUNK BOLT M4x15 | 2 | 2 | 2 | 2 | 2 | 2 | | | |
| 10 | S222809000 | PORTAMANDOS MARMITA 1M | PAN CONTROL HOLDER 1M | 1 | 1 | 1 | 1 | 1 | 1 | | | |
| 11 | X143018000 | PILOTO AMBAR SARTEN | FRYING PAM AMBER PILOT | 1 | 1 | 1 | 1 | 1 | 1 | | | |
| 12 | S142105000 | MANDO AGUA MARMITA FG(08) | WATER PAN CONTROL FG(08) | 1 | 1 | 1 | 1 | 1 | 1 | | | |
| 13 | S105004000 | CONDUCCION A QUEMADOR G910 | PIPING TO BURNER G910 | 1 | 1 | _ | _ | _ | _ | | | |
| 13 | S035038000 | CONDUCCION A QUEMADOR G915 | PIPING TO BURNER G915 | _ | _ | 1 | 1 | _ | _ | | | |
| 13 | S045033000 | CONDUCCION A QUEMADOR G920 | PIPING TO BURNER G920 | _ | _ | _ | _ | 1 | 1 | | | |
| | S312105000 | TUERCA FIJAC.COND.QUEMADOR | BURNER PIPE FASTENING NUT | 1 | 1 | 1 | 1 | 1 | 1 | | | |
| | S312106000 | BICONO Ø16 | BICONE Ø16 | 1 | 1 | 1 | 1 | 1 | 1 | | | |
| 14 | X505724000 | MANGUITO PORTATOBERAS | NOZZLE HOLDER SLEEVE | 2 | 2 | 2 | 2 | 2 | 2 | | | |
| | Q223019000 | TUERCA 3/8 GAS LATÓN | NUT 3/8 GAS BRASS | 2 | 2 | 2 | 2 | 2 | 2 | | | |
| 15 | 9105100000 | TOBERA Ø 1.50 BUT-PROPANO | NOZZLE Ø1.50 BUT-PROPANE | 2 | 2 | _ | _ | _ | _ | | | |
| 15 | U134401000 | TOBERA Ø 2,20 GAS NATURAL | NOZZLE Ø2.20 GAS NATURAL | 2 | 2 | _ | _ | _ | _ | | | |
| 15 | N502401000 | TOBERA Ø 1.70 BUT-PROPANO | NOZZLE Ø1.70 BUT-PROPANE | _ | _ | 2 | 2 | 2 | 2 | | | |
| 15 | S222401000 | TOBERA Ø 2,55 GAS NATURAL | NOZZLE Ø2.55 GAS NATURAL | _ | _ | 2 | 2 | 2 | 2 | | | |
| 16 | X505013000 | REGULADOR DE AIRE POLIDORO | POLIDORO AIR CONTROL | 2 | 2 | 2 | 2 | 2 | 2 | | | |
| | Q012021000 | TORNILLO EXAGONAL M4x10 A304 | HEXAGONAL BOLT M4x10 A304 | 2 | 2 | 2 | 2 | 2 | 2 | | | |
| 17 | S102103000 | BOTON DE MANDO MARMITA | PAN CONTROL BUTTON | 1 | 1 | 1 | 1 | 1 | 1 | | | |
| 18 | S105027000 | TUBO PILOTO MG9-10 | PILOT PIPE MG9-10 | 1 | 1 | _ | _ | _ | _ | | | |
| 18 | S035037000 | TUBO PILOTO MG9-15 | PILOT PIPE MG9-15 | _ | _ | 1 | 1 | _ | _ | | | |
| 18 | S045035000 | TUBO PILOTO MG9-20 | PILOT PIPE MG9-20 | _ | _ | _ | _ | 1 | 1 | | | |
| | X205028000 | BICONO Ø 6 | BICONE Ø 6 | 1 | 1 | 1 | 1 | 1 | 1 | | | |
| | S312107000 | MANGUITO TUBO PILOTO | PILOT PIPE HOSE | 1 | 1 | 1 | 1 | 1 | 1 | | | |
| | U134323000 | RACORD BICONO Ø 6 958.031 | BICONE CONNECTION Ø 6 958.03 | 1 | 1 | 1 | 1 | 1 | 1 | | | |
| 19 | S312101000 | GRIFO SC. PEL-23S.V Ø1,40 | TAP SC. PEL-23S.V Ø1,40 | 1 | 1 | 1 | 1 | 1 | 1 | | | ELIMINADO 01.06.09 |
| 19 | S312115000 | GRIFO SC. PEL-23S.V Ø 2,2 | TAP SC. PEL-23S.V Ø 2,2 | 1 | 1 | 1 | 1 | 1 | 1 | | | INTRODUCIDO 01.06.09 |
| | | | | | | | | | | | | |
| | | | | | | | | | | | | |
| | | | | | | | | | | | | |
| | | | | | | | | | | | | |

| MOD. | MARMITAS GAMA 900/ PAN 900 RANGE | ZONA | CONJUNTO FUNCIONAL / FUNCTIONAL UNIT | PLANO | C-2251 |
|---|---|---|---|---|---|

| ITEM | CODIGO | DENOMINACION | TEXTO | MG9-10 | MG9-10 S | MG9-15 | MG9-15 S | MG9-20 | MG9-20 S | | | NOTAS |
|---|---|---|---|---|---|---|---|---|---|---|---|---|
| 20 | S205029000 | CONDUCCION GRAL. MARMITAS | GEN. PIPE PANS. | 1 | _ | 1 | _ | 1 | _ | | | |
| 20 | S105028000 | CONDUCC. GRAL. MARMITAS 910S | GEN PIPE PAN 910S | _ | 1 | _ | _ | _ | _ | | | |
| 20 | S045037000 | CONDUCCION GRAL. MARMITAS S | GEN. PIPE PANS S | _ | _ | _ | 1 | _ | 1 | | | |
| | Q152004000 | TORNILLO APLAST. M5x13 A304 | MUSHROOM HEAD BOLT M5x13 A | 1 | 1 | 1 | 1 | 1 | 1 | | | |
| | Q012042000 | TORNILLO EXAGONAL M6x15 | HEXAGONAL BOLT M6x15 | 1 | 1 | 1 | 1 | 1 | 1 | | | |
| | Q302022000 | ARANDELA 16x6x1,2 A304 | WASHER 16x6x1.2 A304 | 1 | 1 | 1 | 1 | 1 | 1 | | | |
| | Q221343000 | REMACHE EXAGONAL M6 | HEXAGONAL RIVET M6 | 1 | 1 | 1 | 1 | 1 | 1 | | | |
| | S312103000 | TUERCA FIJACION COND. GNRAL | GEN. PIPE FASTEN NUT | 1 | 1 | 1 | 1 | 1 | 1 | | | |
| | S312104000 | BICONO Ø20 | BICONE Ø20 | 1 | 1 | 1 | 1 | 1 | 1 | | | |
| S/Nº | Z602121000 | MANGUERA ENTRADA AGUA | WATER INTAKE HOSE | _ | 2 | _ | 2 | _ | 2 | | | |
| 21 | S113034000 | PIEZO ELECTRICO | PIEZOELECTRIC | 1 | 1 | 1 | 1 | 1 | 1 | | | |
| 22 | S112804000 | EMBELLECEDOR TUBO | PIPE TRIM | 1 | 1 | 1 | 1 | 1 | 1 | | | |
| 23 | S225042000 | TUBO ENCENDIDO COMP. MG-900 | COMPLETE IGNITION PIPE MG-90 | 1 | 1 | 1 | 1 | 1 | 1 | | | |
| | Q012031000 | TORNILLO EXAGONAL M5x10 A304 | HEXAGONAL BOLT M5x10 A304 | 2 | 2 | 2 | 2 | 2 | 2 | | | |
| 24 | X022131000 | BUJIA | SPARK PLUG | 1 | 1 | 1 | 1 | 1 | 1 | | | |
| 25 | U562130000 | TERMOPAR L=850 | THERMOCOUPLE L=850 | 1 | 1 | 1 | 1 | 1 | 1 | | | |
| 26 | R202100000 | CONJUNTO SOPORTE PILOTO | PILOT SUPPORT UNIT | 1 | 1 | 1 | 1 | 1 | 1 | | | ELIMINADO 01.03.10 |
| 26 | U322118000 | PILOTO COMPLETO BP 100.062 | COMPL. PILOT BP 100.062 | 1 | 1 | 1 | 1 | 1 | 1 | | | INTRODUCIDO 01.03.10 |
| | U442137000 | INYECTOR Ø 0,4 (GAS NATURAL) | NOZZLE Ø 0.4 (GAS NATURAL) | 1 | 1 | 1 | 1 | 1 | 1 | | | |
| | Q221342000 | REMACHE EXAGONAL M5 | HEXAGONAL RIVET M5 | 2 | 2 | 2 | 2 | 2 | 2 | | | |
| | Q012031000 | TORNILLO EXAGON. M5x10 A304 | HEXAGONAL BOLT. M5x10 A304 | 2 | 2 | 2 | 2 | 2 | 2 | | | |
| | | | | | | | | | | | | |
| | | | | | | | | | | | | |
| | | | | | | | | | | | | |
| | | | | | | | | | | | | |
| | | | | | | | | | | | | |
| | | | | | | | | | | | | |
| | | | | | | | | | | | | |
| | | | | | | | | | | | | |
| | | | | | | | | | | | | |
| | | | | | | | | | | | | |

| MOD. | MARMITAS GAMA 900/ PAN 900 RANGE | ZONA | VARIOS / VARIOUS | PLANO | |
|---|---|---|---|---|---|

| ITEM | CODIGO | DENOMINACION | TEXTO | MG9-10 | MG9-10 S | MG9-15 | MG9-15 S | MG9-20 | MG9-20 S | | | NOTAS |
|---|---|---|---|---|---|---|---|---|---|---|---|---|
| | S206501000 | FOLLETO DE INSTRUCCIONES | INSTRUCTION LEAFLET | 1 | 1 | 1 | 1 | 1 | 1 | | | |
| | S563002000 | ESQUEMA TEORICO ADHESIVO | THEOR. DIAGRAM LABEL | 1 | 1 | 1 | 1 | 1 | 1 | | | PLANO HB-74388 |
| | S563003000 | PLANO DE MONTAJE | ASSEMBLY PLAN | 1 | 1 | 1 | 1 | 1 | 1 | | | PLANO HB-80032 |
| | S563001000 | CABLEADO MARMITA G-750Q | PAN WIRING G-750Q | 1 | _ | 1 | _ | 1 | _ | | | |
| | S223003000 | INSTALACION ELE MG900-S | ELE INSTALLATION MG900-S | _ | 1 | _ | 1 | _ | 1 | | | |
| | U323030000 | CABLE BUJIA | SPARK PLUG CABLE | 1 | 1 | 1 | 1 | 1 | 1 | | | |
| | U333003000 | CABLE MASA ENCENDEDOR | LIGHTER EARTH CABLE | 1 | 1 | 1 | 1 | 1 | 1 | | | |

| MOD. | MARMITAS GAMA 900/ PAN 900 RANGE | | ZONA | PIEZAS ESPECIFICAS PARA LOS DISTINTOS GASES / SPECIFIC PARTS FOR DIFFERENT GAS | | | | | PLANO | C-2251 | | |
|---|---|---|---|---|---|---|---|---|---|---|---|---|
| ITEM | CODIGO | DENOMINACION | TEXTO | MG9-10 | MG9-10 S | MG9-15 | MG9-15 S | MG9-20 | MG9-20 S | | | NOTAS |
| | | BUTANO - PROPANO | BUTANE - PROPANE | | | | | | | | | |
| 15 | 9105100000 | TOBERA Ø 1.50 | NOZZLE Ø 1.50 | 2 | 2 | _ | _ | _ | _ | | | |
| 15 | N502401000 | TOBERA Ø 1.70 | NOZZLE Ø 1.70 | _ | _ | 2 | 2 | 2 | 2 | | | |
| S/N | U136501000 | INDICADOR BUTANO - PROPANO | INDICATOR BUTANE-PROPANE | 1 | 1 | 1 | 1 | 1 | 1 | | | |
| | | | | | | | | | | | | |
| | | | | | | | | | | | | |
| | | | | | | | | | | | | |
| | | GAS NATURAL | NATURAL GAS | | | | | | | | | |
| 15 | U134401000 | TOBERA Ø 2,20 | NOZZLE Ø 2.20 | 2 | 2 | _ | _ | _ | _ | | | |
| 15 | S222401000 | TOBERA Ø 2,55 | NOZZLE Ø 2.55 | _ | _ | 2 | 2 | 2 | 2 | | | |
| 26 | U442137000 | INYECTOR Ø 0,4 | INJECTOR Ø 0.4 | 1 | 1 | 1 | 1 | 1 | 1 | | | |
| S/N | U134402000 | INDICADOR GAS NATURAL | INDICATOR GAS NATURAL | 1 | 1 | 1 | 1 | 1 | 1 | | | |
| | | | | | | | | | | | | |
| | | | | | | | | | | | | |
| | | | | | | | | | | | | |
| | | | | | | | | | | | | |
| | | | | | | | | | | | | |
| | | | | | | | | | | | | |
| | | | | | | | | | | | | |
| | | | | | | | | | | | | |
| | | | | | | | | | | | | |
| | | | | | | | | | | | | |
| | | | | | | | | | | | | |
| | | | | | | | | | | | | |
| | | | | | | | | | | | | |
| | | | | | | | | | | | | |
| | | | | | | | | | | | | |
| | | | | | | | | | | | | |
| | | | | | | | | | | | | |
| | | | | | | | | | | | | |

| MOD. | MARMITAS GAMA 900/ PAN 900 RANGE | | ZONA | VERSION AUSTRALIA / AUSTRALIA VERSION | | | | | PLANO | | | |
|---|---|---|---|---|---|---|---|---|---|---|---|---|
| ITEM | CODIGO | DENOMINACION | TEXTO | MG9-10 | MG9-15 | MG9-20 | | | | | | NOTAS |
| | S036516000 | FOLLETO DE INSTRUCCIONES | INSTRUCTION LEAFLET | 1 | 1 | 1 | | | | | | |
| | | | | | | | | | | | | |
| | | BUTANO - PROPANO | BUTANE - PROPANE | | | | | | | | | |
| 15 | 9105100000 | TOBERA Ø 1.50 | NOZZLE Ø 1.50 | 2 | _ | _ | | | | | | |
| 15 | N502401000 | TOBERA Ø 1.70 | NOZZLE Ø 1.70 | _ | 2 | 2 | | | | | | |
| S/N | U136501000 | INDICADOR BUTANO - PROPANO | INDICATOR BUTANE-PROPANE | 1 | 1 | 1 | | | | | | |
| | | | | | | | | | | | | |
| | | | | | | | | | | | | |
| | | | | | | | | | | | | |
| | | GAS NATURAL | NATURAL GAS | | | | | | | | | |
| 15 | S222402000 | TOBERA Ø 2,70 | NOZZLE Ø 2.70 | 2 | _ | _ | | | | | | |
| 15 | R532400000 | TOBERA Ø 3,2 | NOZZLE Ø 3.2 | _ | 2 | 2 | | | | | | |
| 26 | U442137000 | INYECTOR Ø 0,4 | INJECTOR Ø 0.4 | 1 | 1 | 1 | | | | | | |
| S/N | U134402000 | INDICADOR GAS NATURAL | INDICATOR GAS NATURAL | 1 | 1 | 1 | | | | | | |
| | | | | | | | | | | | | |
| | | | | | | | | | | | | |
| | | | | | | | | | | | | |
| | | | | | | | | | | | | |
| | | | | | | | | | | | | |
| | | | | | | | | | | | | |
| | | | | | | | | | | | | |
| | | | | | | | | | | | | |
| | | | | | | | | | | | | |
| | | | | | | | | | | | | |
| | | | | | | | | | | | | |
| | | | | | | | | | | | | |
| | | | | | | | | | | | | |
| | | | | | | | | | | | | |
| | | | | | | | | | | | | |
| | | | | | | | | | | | | |

| MOD. | MARMITAS GAMA 900/ PAN 900 RANGE | | ZONA | VERSION ARGELIA/ ALGERIA VERSION | | | | | | PLANO | C-2250<br>C-2251 | |
|---|---|---|---|---|---|---|---|---|---|---|---|---|
| ITEM | CODIGO | DENOMINACION | TEXTO | MG9-15 | MG9-20 | | | | | | | NOTAS |
| 4 | S036146000 | BISAGRA COMPLETA CUSCUSERA | COMPL. HINGE COUSCOUS COC | 1 | 1 | | | | | | | |
| S/Nº | U565007000 | CODO ENTRADA GAS | GAS INPUT L-BEND | 1 | 1 | | | | | | | |
| S/Nº | U725006000 | TUERCA 3/4 | NUT 3/4 | 1 | 1 | | | | | | | |
| | | | | | | | | | | | | |
| | | | | | | | | | | | | |
| | | | | | | | | | | | | |
| | | BUTANO - PROPANO | BUTANE - PROPANE | | | | | | | | | |
| 15 | N502401000 | TOBERA Ø 1.70 | NOZZLE Ø 1.70 | 2 | 2 | | | | | | | |
| S/N | U136501000 | INDICADOR BUTANO - PROPANO | INDICATOR BUTANE-PROPANE | 1 | 1 | | | | | | | |
| | | | | | | | | | | | | |
| | | | | | | | | | | | | |
| | | | | | | | | | | | | |
| | | GAS NATURAL | NATURAL GAS | | | | | | | | | |
| 15 | S222401000 | TOBERA Ø 2,55 | NOZZLE Ø 2.55 | 2 | 2 | | | | | | | |
| 26 | U442137000 | INYECTOR Ø 0,4 | INJECTOR Ø 0.4 | 1 | 1 | | | | | | | |
| S/N | U134402000 | INDICADOR GAS NATURAL | INDICATOR GAS NATURAL | 1 | 1 | | | | | | | |
| | | | | | | | | | | | | |
| | | | | | | | | | | | | |
| | | | | | | | | | | | | |
| | | | | | | | | | | | | |
| | | | | | | | | | | | | |
| | | | | | | | | | | | | |
| | | | | | | | | | | | | |
| | | | | | | | | | | | | |
| | | | | | | | | | | | | |
| | | | | | | | | | | | | |
| | | | | | | | | | | | | |
| | | | | | | | | | | | | |
| | | | | | | | | | | | | |
| | | | | | | | | | | | | |

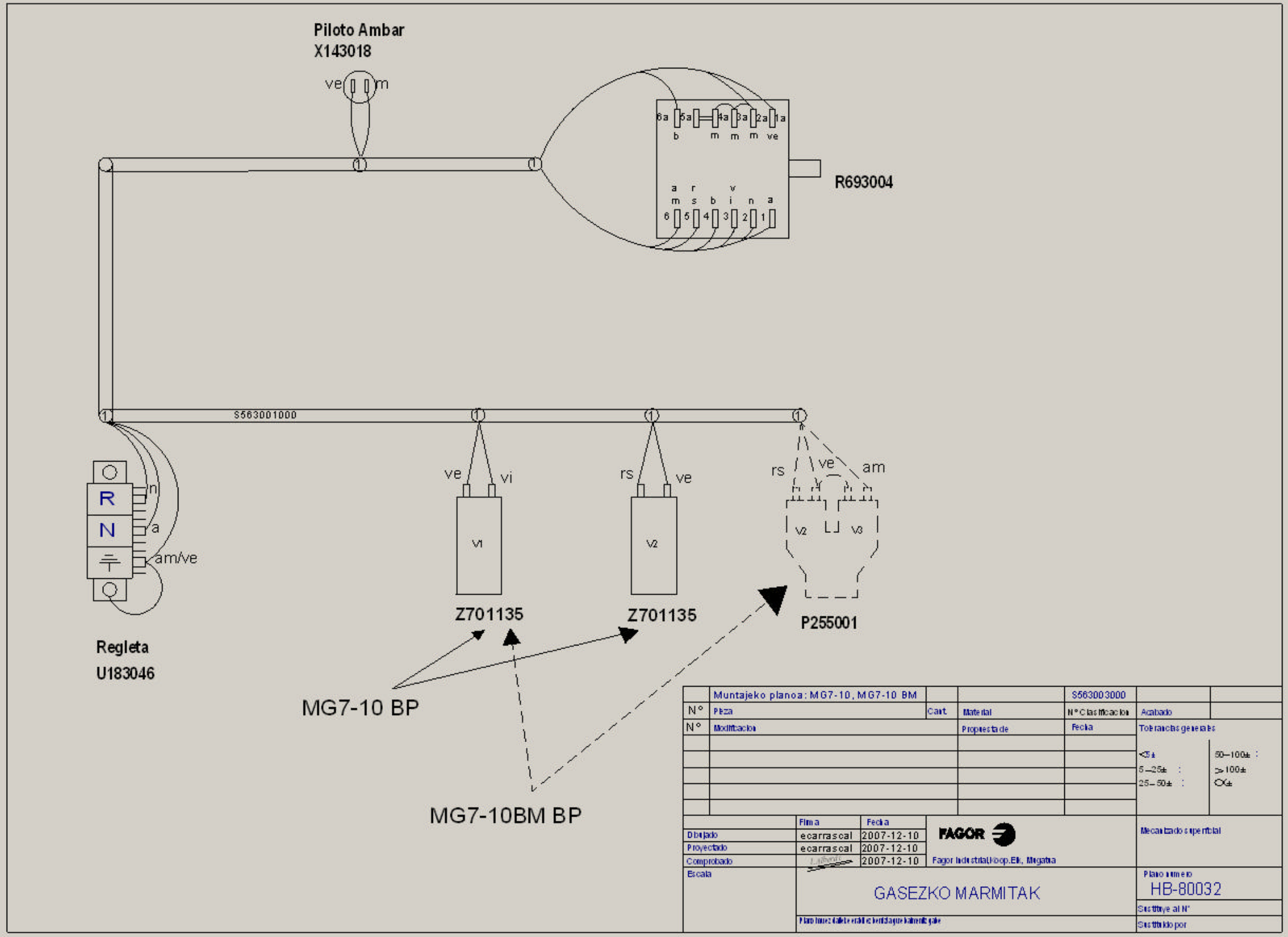

Piloto Ambar
X143018
ve
m
6a
5a
4a
3a
2a
1a
b
m
m
m
ve
R693004
a
r
v
m
s
b
i
n
a
6
5
4
3
2
1
S563001000
R
N
n
a
am/ve
Regleta
U183046
ve
vi
V1
Z701135
rs
ve
V2
Z701135
rs
ve
am
V2
V3
P255001
MG7-10 BP
MG7-10BM BP
Muntajeko planoa: MG7-10, MG7-10 BM
S563003000
N°
Pieza
Cant.
Material
N° Clasificacion
Acabado
N°
Modificacion
Propuesta de
Fecha
Tolerancias generales
<5±
5–25± :
25–50± :
50–100± :
>100±
Firma
Fecha
Dibujado
ecarrascal
2007-12-10
Proyectado
ecarrascal
2007-12-10
Comprobado
2007-12-10
FAGOR
Fagor Industrial,Koop.Elk, Mugatua
Mecanizado superficial
Escala
GASEZKO MARMITAK
Plano numero
HB-80032
Sustituye al N°
Sustituido por

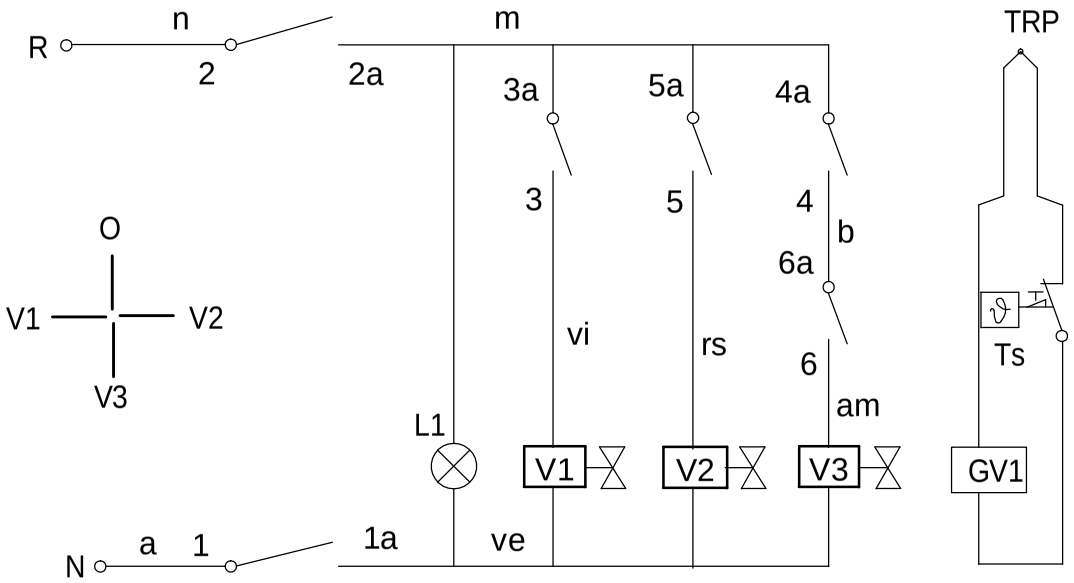


# S563002000

m=marron-brown-marron
n=negro-black-noir
r=rojo-red-rouge
b=blanco-white-blanc
ve=verde-green-vert
g=gris-grey-gris
a=azul-blue-bleu

IG = Interruptor general
L1 = Lampara funcionamiento
V1 = Valvula Agua Caliente
V2 = Valvula Agua Fria
V3 = Valvula Agua Camara
Ts = Limitador (245)
GV1 = Valvula gas (SEGURIDAD)
TRP = Termopar

| IG | 1 1a | 2 2a | 3 3a | 4 4a | 5 5a | 6 6a |
|---|---|---|---|---|---|---|
| 0 | | | | | | |
| V2 | X | X | | | X | X |
| V3 | X | X | | X | | X |
| V1 | X | X | X | X | | |

| Zk./Nº | Esquema de montaje MARM G-750Q | Cant. | Materiala/Material | Klas. zk/Nº Clas. | Data/Fecha |
|---|---|---|---|---|---|
| - | Pieza | - | - | S563002000 | - |
| Zk./Nº | Aldaketa/Modificaciones | Nork proposatua/Propuesta de | | | |
| - | - | - | | | - |
| - | - | - | | | - |
| - | - | - | | | - |
| - | - | - | | | - |
| - | - | - | | | - |

| | Sinadura/Firma | Data/Fecha |
|---|---|---|
| Marraztua/Dibujado | J.Etxeberria | 5-6-2007 |
| Proiektatua/Proyectado | J.Etxeberria | 5-6-2007 |
| Egiaztatua/Comprobado | I.Alberdi | 20-6-2007 |
| Eskala/Escala | - | |

FAGOR
Fagor Industrial,Koop.Elk, Mugatua

**MARMITAK**

Plano hau ezin daiteke erabili, ez berriztatu, gure baimenik gabe.

| - | Gainazal akabera/Tratamiento |
|---|---|

Perdoi orokorrak
Tolerancias generales

| < 5 ± 0.2 | 5 ÷ 25 ± 0.4 | 25 ÷ 50 ± 0.6 |
|---|---|---|
| 50 ÷ 100 ± 0.8 | >100± 1 | α ± 1 |

Gainazal perdoia
Mecanizado Superficial

—

Plano Zk./Plano Nº
**HB-74388**

| - | Zk. ord. du |
|---|---|
| - | Zk.gaitik ord. |