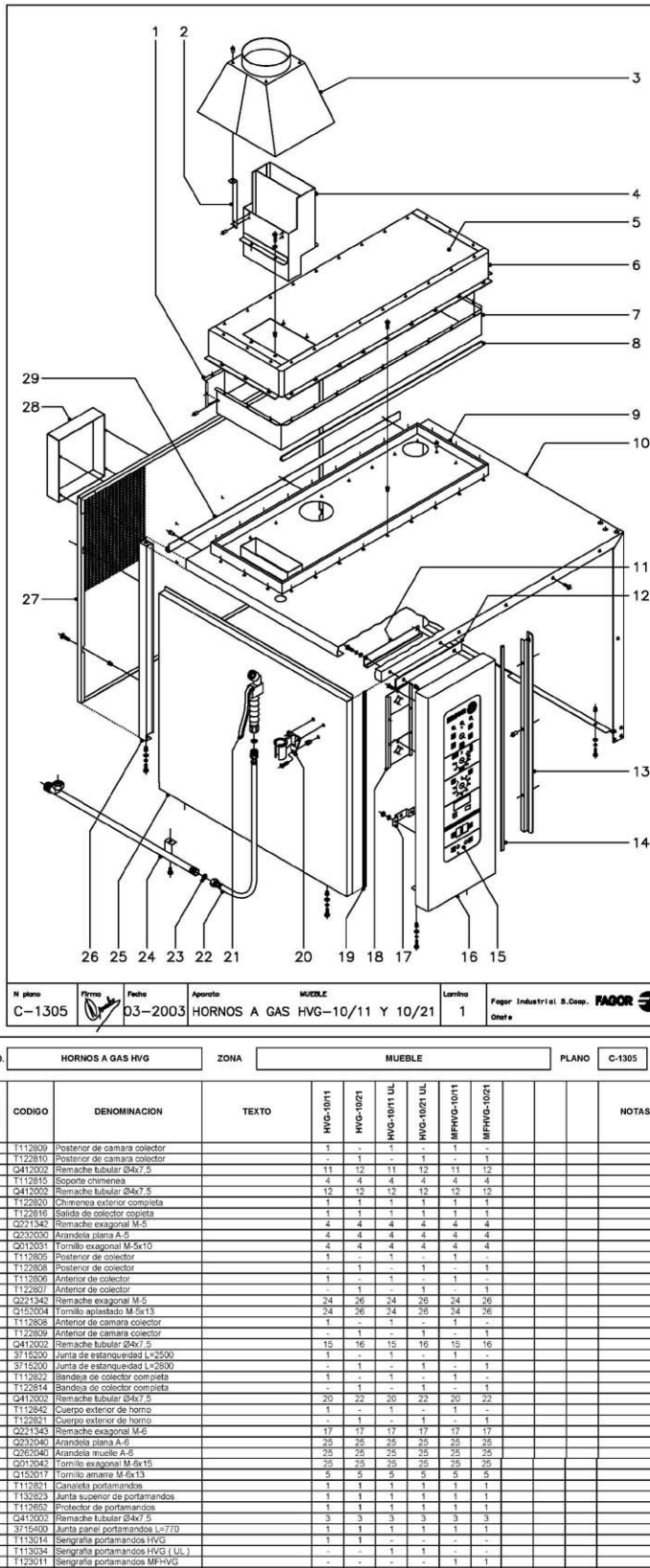


| N plano | Firma | Fecha | Aparato | | Lamina | |
|---|---|---|---|---|---|---|
| C-1305 | | 03-2003 | MUEBLE | HORNOS A GAS HVG-10/11 Y 10/21 | 1 | Fagor Industrial S.Coop. Onate FAGOR |

| MOD. | HORNOS A GAS HVG | ZONA | MUEBLE | PLANO | C-1305 |
|---|---|---|---|---|---|

| ITEM | CODIGO | DENOMINACION | TEXTO | HVG-10/11 | HVG-10/21 | HVG-10/11 UL | HVG-10/21 UL | MFHVG-10/11 | MFHVG-10/21 | | | | NOTAS |
|---|---|---|---|---|---|---|---|---|---|---|---|---|---|
| 1 | T112809 | Posterior de camara colector | | 1 | - | 1 | - | 1 | - | | | | |
| 1 | T122810 | Posterior de camara colector | | - | 1 | - | 1 | - | 1 | | | | |
| | Q412002 | Remache tubular Ø4x7.5 | | 11 | 12 | 11 | 12 | 11 | 12 | | | | |
| 2 | T112815 | Soporte chimenea | | 4 | 4 | 4 | 4 | 4 | 4 | | | | |
| | Q412002 | Remache tubular Ø4x7.5 | | 12 | 12 | 12 | 12 | 12 | 12 | | | | |
| 3 | T122820 | Chimenea exterior completa | | 1 | 1 | 1 | 1 | 1 | 1 | | | | |
| 4 | T122816 | Salida de colector copleta | | 1 | 1 | 1 | 1 | 1 | 1 | | | | |
| | Q221342 | Remache exagonal M-5 | | 4 | 4 | 4 | 4 | 4 | 4 | | | | |
| | Q232040 | Arandela plana A-5 | | 4 | 4 | 4 | 4 | 4 | 4 | | | | |
| | Q012031 | Tornillo exagonal M-5x10 | | 4 | 4 | 4 | 4 | 4 | 4 | | | | |
| 5 | T112805 | Posterior de colector | | 1 | - | 1 | - | 1 | - | | | | |
| 5 | T122808 | Posterior de colector | | - | 1 | - | 1 | - | 1 | | | | |
| 6 | T112806 | Anterior de colector | | 1 | - | 1 | - | 1 | - | | | | |
| 6 | T122807 | Anterior de colector | | - | 1 | - | 1 | - | 1 | | | | |
| | Q221342 | Remache exagonal M-5 | | 24 | 26 | 24 | 26 | 24 | 26 | | | | |
| | Q152004 | Tornillo aplastado M-5x13 | | 24 | 26 | 24 | 26 | 24 | 26 | | | | |
| 7 | T112808 | Anterior de camara colector | | 1 | - | 1 | - | 1 | - | | | | |
| 7 | T122809 | Anterior de camara colector | | - | 1 | - | 1 | - | 1 | | | | |
| | Q412002 | Remache tubular Ø4x7.5 | | 15 | 16 | 15 | 16 | 15 | 16 | | | | |
| 8 | 3715200 | Junta de estanqueidad L=2500 | | 1 | - | 1 | - | 1 | - | | | | |
| 8 | 3715200 | Junta de estanqueidad L=2800 | | - | 1 | - | 1 | - | 1 | | | | |
| 9 | T112822 | Bandeja de colector completa | | 1 | - | 1 | - | 1 | - | | | | |
| 9 | T122814 | Bandeja de colector completa | | - | 1 | - | 1 | - | 1 | | | | |
| | Q412002 | Remache tubular Ø4x7.5 | | 20 | 22 | 20 | 22 | 20 | 22 | | | | |
| 10 | T112842 | Cuerpo exterior de horno | | 1 | - | 1 | - | 1 | - | | | | |
| 10 | T122821 | Cuerpo exterior de horno | | - | 1 | - | 1 | - | 1 | | | | |
| | Q221343 | Remache exagonal M-6 | | 17 | 17 | 17 | 17 | 17 | 17 | | | | |
| | Q232040 | Arandela plana A-6 | | 25 | 25 | 25 | 25 | 25 | 25 | | | | |
| | Q262040 | Arandela muelle A-6 | | 25 | 25 | 25 | 25 | 25 | 25 | | | | |
| | Q012042 | Tornillo exagonal M-6x15 | | 25 | 25 | 25 | 25 | 25 | 25 | | | | |
| | Q152017 | Tornillo amarre M-6x13 | | 5 | 5 | 5 | 5 | 5 | 5 | | | | |
| 11 | T112821 | Canaleta portamandos | | 1 | 1 | 1 | 1 | 1 | 1 | | | | |
| 12 | T132823 | Junta superior de portamandos | | 1 | 1 | 1 | 1 | 1 | 1 | | | | |
| 13 | T112650 | Protector de portamandos | | 1 | 1 | 1 | 1 | 1 | 1 | | | | |
| | Q412002 | Remache tubular Ø4x7.5 | | 3 | 3 | 3 | 3 | 3 | 3 | | | | |
| 14 | 3715400 | Junta panel portamandos L=770 | | 1 | 1 | 1 | 1 | 1 | 1 | | | | |
| 15 | T113014 | Serigrafia portamandos HVG | | 1 | 1 | - | - | - | - | | | | |
| 15 | T113034 | Serigrafia portamandos HVG ( UL ) | | - | - | 1 | 1 | - | - | | | | |
| 15 | T123011 | Serigrafia portamandos MFHVG | | - | - | - | - | 1 | 1 | | | | |
| 16 | T112845 | Panel portamandos | | 1 | 1 | 1 | 1 | 1 | 1 | | | | |
| | Q221343 | Remache exagonal M-6 | | 4 | 4 | 4 | 4 | 4 | 4 | | | | |
| | Q232040 | Arandela plana A-6 | | 4 | 4 | 4 | 4 | 4 | 4 | | | | |
| | Q262040 | Arandela muelle A-6 | | 4 | 4 | 4 | 4 | 4 | 4 | | | | |
| | Q012042 | Tornillo exagonal M-6x15 | | 4 | 4 | 4 | 4 | 4 | 4 | | | | |
| 17 | Z952911 | Soporte imitador arroz | | 1 | 1 | 1 | 1 | 1 | 1 | | | | |
| | Q242030 | Arandela abanico A-5 | | 2 | 2 | 2 | 2 | 2 | 2 | | | | |
| | Q162030 | Tuerca exagonal M-5 | | 2 | 2 | 2 | 2 | 2 | 2 | | | | |
| 18 | T112812 | Soporte componentes | | 1 | 1 | 1 | 1 | 1 | 1 | | | | |
| | Q152004 | Tornillo aplastado M-5x13 | | 2 | 2 | 2 | 2 | 2 | 2 | | | | |
| 19 | 3715400 | Junta panel portamandos L=770 | | 1 | 1 | 1 | 1 | 1 | 1 | | | | En panel lateral |
| 20 | R095007 | Suporte de ducha | | 1 | 1 | 1 | 1 | 1 | 1 | | | | |
| | Q221342 | Remache exagonal M-4 | | 3 | 3 | 3 | 3 | 3 | 3 | | | | |
| | Q042022 | Tornillo avellanado M-4x15 | | 3 | 3 | 3 | 3 | 3 | 3 | | | | |
| 21 | R095005 | Cuerpo de ducha | | 1 | 1 | 1 | 1 | 1 | 1 | | | | |
| 22 | R095006 | Flexible de ducha | | 1 | 1 | 1 | 1 | 1 | 1 | | | | |
| 23 | - | Arandela junta (con cuerpo ducha) | | 2 | 2 | 2 | 2 | 2 | 2 | | | | |
| 24 | R675002 | Suplemento ducha | | 1 | - | 1 | - | 1 | - | | | | |
| 24 | R685003 | Suplemento ducha | | - | 1 | - | 1 | - | 1 | | | | |
| | Q012042 | Tornillo exagonal M-6x15 | | 1 | 1 | 1 | 1 | 1 | 1 | | | | |
| 25 | T112817 | Panel lateral anterior | | 1 | - | 1 | - | 1 | - | | | | |
| 25 | T122805 | Panel lateral anterior | | - | 1 | - | 1 | - | 1 | | | | |
| | Q221343 | Remache exagonal M-6 | | 2 | 2 | 2 | 2 | 2 | 2 | | | | |
| | Q232040 | Arandela plana A-6 | | 2 | 2 | 2 | 2 | 2 | 2 | | | | |
| | Q262040 | Arandela muelle A-6 | | 2 | 2 | 2 | 2 | 2 | 2 | | | | |
| | Q012042 | Tornillo exagonal M-6x15 | | 2 | 2 | 2 | 2 | 2 | 2 | | | | |
| 26 | T112818 | Panel lateral posterior | | 1 | 1 | 1 | 1 | 1 | 1 | | | | |
| | Q221343 | Remache exagonal M-6 | | 2 | 2 | 2 | 2 | 2 | 2 | | | | |
| | Q232040 | Arandela plana A-6 | | 2 | 2 | 2 | 2 | 2 | 2 | | | | |
| | Q262040 | Arandela muelle A-6 | | 2 | 2 | 2 | 2 | 2 | 2 | | | | |
| | Q012042 | Tornillo exagonal M-6x15 | | 2 | 2 | 2 | 2 | 2 | 2 | | | | |
| 27 | T112803 | Panel posterior exterior | | 1 | - | 1 | - | 1 | - | | | | |
| 27 | T122802 | Panel posterior exterior | | - | 1 | - | 1 | - | 1 | | | | |
| | Q221342 | Remache exagonal M-5 | | 4 | 4 | 4 | 4 | 4 | 4 | | | | |
| | Q152038 | Tornillo amarre M-5x30 | | 4 | 4 | 4 | 4 | 4 | 4 | | | | |
| 28 | T082808 | Tapa de separacion | | 1 | 1 | 1 | 1 | 1 | 1 | | | | |
| 29 | T112819 | Protector superior | | 1 | - | 1 | - | 1 | - | | | | |
| 29 | T122813 | Protector superior | | - | 1 | - | 1 | - | 1 | | | | |
| | Q412002 | Remache tubular Ø4x7.5 | | 3 | 3 | 3 | 3 | 3 | 3 | | | | |

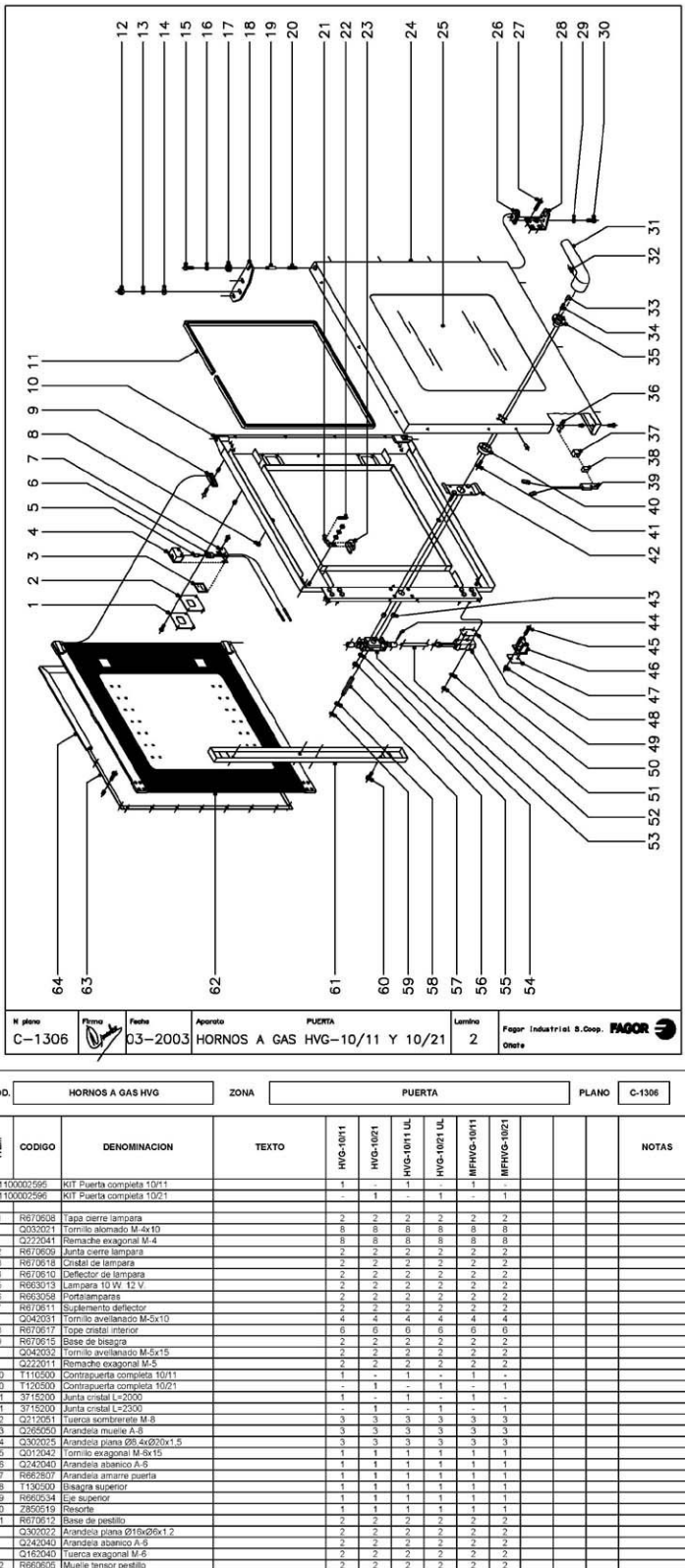


| N plano | Firma | Fecha | Aparato | Lamina | |
|---|---|---|---|---|---|
| C-1306 | | 03-2003 | PUERTA<br>HORNOS A GAS HVG-10/11 Y 10/21 | 2 | Fagor Industrial S.Coop.<br>Onate |

MOD. HORNOS A GAS HVG | ZONA PUERTA | PLANO C-1306

| ITEM | CODIGO | DENOMINACION | TEXTO | HVG-10/11 | HVG-10/21 | HVG-10/11 UL | HVG-10/21 UL | MFHVG-10/11 | MFHVG-10/21 | NOTAS |
|---|---|---|---|---|---|---|---|---|---|---|
| | 1100002595 | KIT Puerta completa 10/11 | | 1 | - | 1 | - | 1 | - | |
| | 1100002596 | KIT Puerta completa 10/21 | | - | 1 | - | 1 | - | 1 | |
| | | | | | | | | | | |
| 1 | R670608 | Tapa cierre lampara | | 2 | 2 | 2 | 2 | 2 | 2 | |
| | Q032021 | Tornillo alomado M-4x10 | | 8 | 8 | 8 | 8 | 8 | 8 | |
| | Q222041 | Remache exagonal M-4 | | 8 | 8 | 8 | 8 | 8 | 8 | |
| 2 | R670609 | Junta cierre lampara | | 2 | 2 | 2 | 2 | 2 | 2 | |
| 3 | R670618 | Cristal de lampara | | 2 | 2 | 2 | 2 | 2 | 2 | |
| 4 | R670610 | Deflector de lampara | | 2 | 2 | 2 | 2 | 2 | 2 | |
| 5 | R663013 | Lampara 10 W. 12 V. | | 2 | 2 | 2 | 2 | 2 | 2 | |
| 6 | R663058 | Portalamparas | | 2 | 2 | 2 | 2 | 2 | 2 | |
| 7 | R670611 | Suplemento deflector | | 2 | 2 | 2 | 2 | 2 | 2 | |
| | Q042031 | Tornillo avellanado M-5x10 | | 4 | 4 | 4 | 4 | 4 | 4 | |
| 8 | R670617 | Tope cristal interior | | 6 | 6 | 6 | 6 | 6 | 6 | |
| 9 | R670615 | Base de bisagra | | 2 | 2 | 2 | 2 | 2 | 2 | |
| | Q042032 | Tornillo avellanado M-5x15 | | 2 | 2 | 2 | 2 | 2 | 2 | |
| | Q222011 | Remache exagonal M-5 | | 2 | 2 | 2 | 2 | 2 | 2 | |
| 10 | T110500 | Contrapuerta completa 10/11 | | 1 | - | 1 | - | 1 | - | |
| 10 | T120500 | Contrapuerta completa 10/21 | | - | 1 | - | 1 | - | 1 | |
| 11 | 3715200 | Junta cristal L=2000 | | 1 | - | 1 | - | 1 | - | |
| 11 | 3715200 | Junta cristal L=2300 | | - | 1 | - | 1 | - | 1 | |
| 12 | Q212051 | Tuerca sombrerete M-8 | | 3 | 3 | 3 | 3 | 3 | 3 | |
| 13 | Q265050 | Arandela muelle A-8 | | 3 | 3 | 3 | 3 | 3 | 3 | |
| 14 | Q302025 | Arandela plana Ø8.4x Ø20x1.5 | | 3 | 3 | 3 | 3 | 3 | 3 | |
| 15 | Q012042 | Tornillo exagonal M-8x15 | | 1 | 1 | 1 | 1 | 1 | 1 | |
| 16 | Q242040 | Arandela abanico A-8 | | 1 | 1 | 1 | 1 | 1 | 1 | |
| 17 | R662807 | Arandela amarre puerta | | 1 | 1 | 1 | 1 | 1 | 1 | |
| 18 | T130500 | Bisagra superior | | 1 | 1 | 1 | 1 | 1 | 1 | |
| 19 | R660534 | Eje superior | | 1 | 1 | 1 | 1 | 1 | 1 | |
| 20 | Z850519 | Resorte | | 1 | 1 | 1 | 1 | 1 | 1 | |
| 21 | R670612 | Base de pestillo | | 2 | 2 | 2 | 2 | 2 | 2 | |
| | Q302022 | Arandela plana Ø16xØ6x1.2 | | 2 | 2 | 2 | 2 | 2 | 2 | |
| | Q242040 | Arandela abanico A-6 | | 2 | 2 | 2 | 2 | 2 | 2 | |
| | Q162040 | Tuerca exagonal M-6 | | 2 | 2 | 2 | 2 | 2 | 2 | |
| 22 | R660606 | Muelle tensor pestillo | | 2 | 2 | 2 | 2 | 2 | 2 | |
| 23 | R670613 | Pestillo sujecion cristal interior | | 2 | 2 | 2 | 2 | 2 | 2 | |
| 24 | R670600 | Panel puerta 10/11 | | 1 | - | 1 | - | 1 | - | |
| 24 | R680600 | Panel puerta 10/21 | | - | 1 | - | 1 | - | 1 | |
| | Q412002 | Remache tubular Ø4x7.5 | | 14 | 14 | 14 | 14 | 14 | 14 | |
| 25 | R670625 | Cristal exterior 10/11 | | 1 | - | 1 | - | 1 | - | |
| 25 | R680609 | Cristal exterior 10/21 | | - | 1 | - | 1 | - | 1 | |
| 26 | R660549 | Guia eje inferior | | 1 | 1 | 1 | 1 | 1 | 1 | |
| 27 | Q062040 | Tornillo avellanado M-6x16 | | 4 | 4 | 4 | 4 | 4 | 4 | |
| 28 | R660551 | Bisagra inferior | | 1 | 1 | 1 | 1 | 1 | 1 | |
| 29 | Q242040 | Arandela abanico A-6 | | 2 | 2 | 2 | 2 | 2 | 2 | |
| 30 | Q012041 | Tornillo exagonal M-6x10 | | 2 | 2 | 2 | 2 | 2 | 2 | |
| 31 | T130502 | Manilla | | 1 | 1 | 1 | 1 | 1 | 1 | |
| 32 | Q132042 | Varilla roscada M-6x15 | | 1 | 1 | 1 | 1 | 1 | 1 | |
| 33 | T130507 | Piton enganche | | 2 | 2 | 2 | 2 | 2 | 2 | |
| 34 | T130508 | Resorte | | 2 | 2 | 2 | 2 | 2 | 2 | |
| 35 | T130515 | Guia manilla | | 1 | 1 | 1 | 1 | 1 | 1 | |
| 36 | T130513 | Soporte iman | | 1 | 1 | 1 | 1 | 1 | 1 | |
| 37 | Z200507 | Protector iman | | 1 | 1 | 1 | 1 | 1 | 1 | |
| 38 | Z200506 | Iman | | 1 | 1 | 1 | 1 | 1 | 1 | |
| 39 | Z100522 | Interruptor magnetico | | 1 | 1 | 1 | 1 | 1 | 1 | |
| 40 | T130514 | Soporte resortes | | 1 | 1 | 1 | 1 | 1 | 1 | |
| 41 | Q032032 | Tornillo alomado M-5x15 | | 2 | 2 | 2 | 2 | 2 | 2 | |
| 42 | T130511 | Suplemento fijacion cerradura | | 1 | 1 | 1 | 1 | 1 | 1 | |
| 43 | Z608410 | Casquillo | | 2 | 2 | 2 | 2 | 2 | 2 | |
| 44 | Q352001 | Pasador de aletas Ø2x15 | | 4 | 4 | 4 | 4 | 4 | 4 | |
| 45 | Q042043 | Tornillo avellanado M-6x20 | | 4 | 4 | 4 | 4 | 4 | 4 | |
| 46 | R260545 | Enganche | | 2 | 2 | 2 | 2 | 2 | 2 | |
| 47 | R660538 | Calzo de enganche | | 4 | 4 | 4 | 4 | 4 | 4 | |
| 48 | Q221343 | Remache exagonal M-6 | | 4 | 4 | 4 | 4 | 4 | 4 | |
| 49 | T080503 | Suplemento elemento cierre | | 6 | 6 | 6 | 6 | 6 | 6 | |
| 50 | T080504 | Elemento de cierre | | 2 | 2 | 2 | 2 | 2 | 2 | |
| 51 | Q262040 | Arandela muelle A-6 | | 8 | 8 | 8 | 8 | 8 | 8 | |
| 52 | Q162040 | Tuerca exagonal M-6 | | 8 | 8 | 8 | 8 | 8 | 8 | |
| 53 | R020502 | Tubo alargadera | | 2 | 2 | 2 | 2 | 2 | 2 | |
| 54 | T130509 | Mecanismo de cierre | | 1 | 1 | 1 | 1 | 1 | 1 | |
| 55 | Q262040 | Arandela muelle A-6 | | 2 | 2 | 2 | 2 | 2 | 2 | |
| 56 | Q162040 | Tuerca exagonal M-6 | | 2 | 2 | 2 | 2 | 2 | 2 | |
| 57 | T130508 | Eje de manilla | | 1 | 1 | 1 | 1 | 1 | 1 | |
| 58 | T130505 | Casquillo | | 1 | 1 | 1 | 1 | 1 | 1 | |
| 59 | Q271033 | Arandela de seguridad Ø6 | | 1 | 1 | 1 | 1 | 1 | 1 | |
| 60 | Q032031 | Tornillo alomado M-5x10 | | 2 | 2 | 2 | 2 | 2 | 2 | |
| 60 | Q032021 | Tornillo alomado M-4x10 | | 2 | 2 | 2 | 2 | 2 | 2 | |
| 61 | T110502 | Tapa cierre puerta | | 1 | 1 | 1 | 1 | 1 | 1 | |
| 62 | 1100002807 | KIT Cristal interior completo 10/11 | | 1 | - | 1 | - | 1 | - | |
| 62 | 1100002808 | KIT Cristal interior completo 10/21 | | - | 1 | - | 1 | - | 1 | |
| 63 | R670513 | Fijacion junta completa 10/11 | | 1 | - | 1 | - | 1 | - | |
| 63 | R680511 | Fijacion junta completa 10/21 | | - | 1 | - | 1 | - | 1 | |
| | Q033021 | Tornillo alomado M-4x10 ( laton ) | | 28 | 28 | 28 | 28 | 28 | 28 | |
| | Q222041 | Remache exagonal M-4 inox. | | 28 | 28 | 28 | 28 | 28 | 28 | |
| 64 | R670500 | Junta de puerta 10/11 | | 1 | - | 1 | - | 1 | - | |
| 64 | R680500 | Junta de puerta 10/21 | | - | 1 | - | 1 | - | 1 | |

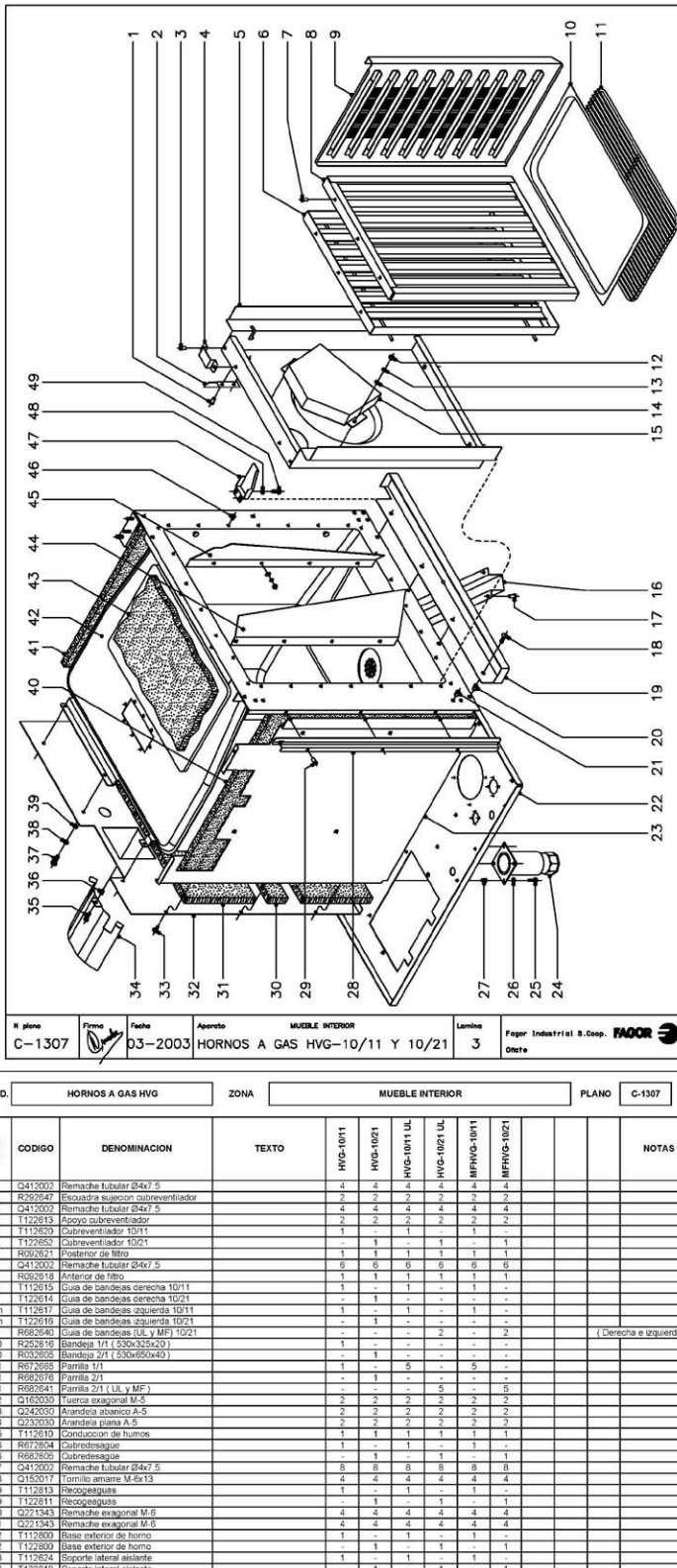


| N plano | Firma | Fecha | Aparato | Lamina | Fagor Industrial S.Coop. |
|---|---|---|---|---|---|
| C-1307 | | 03-2003 | MUEBLE INTERIOR<br>HORNOS A GAS HVG-10/11 Y 10/21 | 3 | Oñate |

| MOD. | HORNOS A GAS HVG | ZONA | MUEBLE INTERIOR | PLANO | C-1307 |
|---|---|---|---|---|---|

| ITEM | CODIGO | DENOMINACION | TEXTO | HVG-10/11 | HVG-10/21 | HVG-10/11 UL | HVG-10/21 UL | MFHVG-10/11 | MFHVG-10/21 | NOTAS |
|---|---|---|---|---|---|---|---|---|---|---|
| 1 | Q412002 | Remache tubular Ø4x7.5 | | 4 | 4 | 4 | 4 | 4 | 4 | |
| 2 | R292647 | Escuadra sujecion cubreventilador | | 2 | 2 | 2 | 2 | 2 | 2 | |
| 3 | Q412002 | Remache tubular Ø4x7.5 | | 4 | 4 | 4 | 4 | 4 | 4 | |
| 4 | T122613 | Apoyo cubreventilador | | 2 | 2 | 2 | 2 | 2 | 2 | |
| 5 | T112620 | Cubreventilador 10/11 | | 1 | - | 1 | - | 1 | - | |
| 5 | T122652 | Cubreventilador 10/21 | | - | 1 | - | 1 | - | 1 | |
| 6 | R092621 | Posterior de filtro | | 1 | 1 | 1 | 1 | 1 | 1 | |
| 7 | Q412002 | Remache tubular Ø4x7.5 | | 6 | 6 | 6 | 6 | 6 | 6 | |
| 8 | R092618 | Anterior de filtro | | 1 | 1 | 1 | 1 | 1 | 1 | |
| 9 | T112615 | Guia de bandejas derecha 10/11 | | 1 | - | 1 | - | 1 | - | |
| 9 | T122614 | Guia de bandejas derecha 10/21 | | - | 1 | - | - | - | - | |
| s/n | T112617 | Guia de bandejas izquierda 10/11 | | 1 | - | 1 | - | 1 | - | |
| s/n | T122619 | Guia de bandejas izquierda 10/21 | | - | 1 | - | - | - | - | |
| 9 | R682640 | Guia de bandejas (UL y MF) 10/21 | | - | - | - | 2 | - | 2 | ( Derecha e izquierda ) |
| 10 | R252816 | Bandeja 1/1 ( 530x325x20 ) | | 1 | - | - | - | - | - | |
| 10 | R032605 | Bandeja 2/1 ( 530x650x40 ) | | - | 1 | - | - | - | - | |
| 11 | R672665 | Parrilla 1/1 | | 1 | - | 5 | - | 5 | - | |
| 11 | R682676 | Parrilla 2/1 | | - | 1 | - | - | - | - | |
| 11 | R682641 | Parrilla 2/1 ( UL y MF ) | | - | - | - | 5 | - | 5 | |
| 12 | Q162030 | Tuerca exagonal M-5 | | 2 | 2 | 2 | 2 | 2 | 2 | |
| 13 | Q242030 | Arandela abanico A-5 | | 2 | 2 | 2 | 2 | 2 | 2 | |
| 14 | Q232030 | Arandela plana A-5 | | 2 | 2 | 2 | 2 | 2 | 2 | |
| 15 | T112610 | Conduccion de humos | | 1 | 1 | 1 | 1 | 1 | 1 | |
| 16 | R672604 | Cubredesague | | 1 | - | 1 | - | 1 | - | |
| 16 | R682605 | Cubredesagüe | | - | 1 | - | 1 | - | 1 | |
| 17 | Q412002 | Remache tubular Ø4x7.5 | | 8 | 8 | 8 | 8 | 8 | 8 | |
| 18 | Q152017 | Tornillo amarre M-6x13 | | 4 | 4 | 4 | 4 | 4 | 4 | |
| 19 | T112813 | Recogeaguas | | 1 | - | 1 | - | 1 | - | |
| 19 | T122811 | Recogeaguas | | - | 1 | - | 1 | - | 1 | |
| 20 | Q221343 | Remache exagonal M-6 | | 4 | 4 | 4 | 4 | 4 | 4 | |
| 21 | Q221343 | Remache exagonal M-6 | | 4 | 4 | 4 | 4 | 4 | 4 | |
| 22 | T112800 | Base exterior de horno | | 1 | - | 1 | - | 1 | - | |
| 22 | T122800 | Base exterior de horno | | - | 1 | - | 1 | - | 1 | |
| 23 | T112624 | Soporte lateral aislante | | 1 | - | 1 | - | 1 | - | |
| 23 | T122619 | Soporte lateral aislante | | - | 1 | - | 1 | - | 1 | |
| 24 | X260151 | Pata regulable | | 4 | 4 | 4 | 4 | 4 | 4 | |
| 25 | Q012031 | Tornillo exagonal M-5x10 | | 16 | 16 | 16 | 16 | 16 | 16 | |
| 26 | Q242030 | Arandela abanico A-5 | | 16 | 16 | 16 | 16 | 16 | 16 | |
| 27 | Q221342 | Remache exagonal M-5 | | 16 | 16 | 16 | 16 | 16 | 16 | |
| 28 | T112652 | Protector portamandos | | 1 | 1 | 1 | 1 | 1 | 1 | |
| 29 | Q412002 | Remache tubular Ø4x7.5 | | 3 | 3 | 3 | 3 | 3 | 3 | |
| 30 | R662616 | Aislante posterior 560x60x20 | | 4 | 4 | 4 | 4 | 4 | 4 | |
| 31 | R672631 | Aislante posterior 670x230x20 | | 2 | - | 2 | - | 2 | - | |
| 31 | R932625 | Aislante posterior 760x230x20 | | - | 2 | - | 2 | - | 2 | |
| 32 | T112631 | Soporte aislante posterior | | 1 | - | 1 | - | 1 | - | |
| 32 | T122604 | Soporte aislante posterior | | - | 1 | - | 1 | - | 1 | |
| 33 | Q151301 | Tornillo alomado | | 3 | 3 | 3 | 3 | 3 | 3 | |
| 34 | R142628 | Tejadillo motor turbina | | 1 | 1 | 1 | 1 | 1 | 1 | |
| s/n | R142614 | Tejadillo ventilador soplante | | 1 | 1 | 1 | 1 | 1 | 1 | |
| 35 | Q012042 | Tornillo exagonal M-6x15 | | 3 | 3 | 3 | 3 | 3 | 3 | |
| 36 | Q221343 | Remache exagonal M-6 | | 2 | 2 | 2 | 2 | 2 | 2 | |
| 37 | Q012042 | Tornillo exagonal M-6x15 | | 12 | 12 | 12 | 12 | 12 | 12 | |
| 38 | Q262040 | Arandela muelle A-6 | | 12 | 12 | 12 | 12 | 12 | 12 | |
| 39 | Q232040 | Arandela plana A-6 | | 12 | 12 | 12 | 12 | 12 | 12 | |
| 40 | R672630 | Aislante lateral 770x650x20 | | 3 | - | 3 | - | 3 | - | |
| 40 | R682623 | Aislante lateral 860x790x20 | | - | 3 | - | 3 | - | 3 | |
| 41 | R672630 | Aislante lateral 770x650x20 | | 2 | - | 2 | - | 2 | - | |
| 41 | R682623 | Aislante lateral 860x790x20 | | - | 2 | - | 2 | - | 2 | |
| 42 | T112622 | Cuerpo interior horno | | 1 | - | 1 | - | 1 | - | |
| 42 | T122620 | Cuerpo interior horno | | - | 1 | - | 1 | - | 1 | |
| 43 | R662614 | Aislante base y techo 650x650x20 | | 6 | - | 6 | - | 6 | - | |
| 43 | R682623 | Aislante base y techo 860x790x20 | | - | 6 | - | 6 | - | 6 | |
| 44 | T122650 | Deflector izquierdo | | - | 1 | - | 1 | - | 1 | |
| 45 | T122651 | Deflector derecho | | - | 1 | - | 1 | - | 1 | |
| | Q232040 | Arandela plana A-6 | | - | 8 | - | 8 | - | 8 | |
| | Q262040 | Arandela muelle A-6 | | - | 8 | - | 8 | - | 8 | |
| | Q162040 | Tuerca exagonal M-6 | | - | 8 | - | 8 | - | 8 | |
| 46 | Q221341 | Remache exagonal M-4 | | 28 | 28 | 28 | 28 | 28 | 28 | |
| 47 | R662800 | Cubrecables | | 1 | 1 | 1 | 1 | 1 | 1 | |
| 48 | Q232030 | Arandela plana A-5 | | 2 | 2 | 2 | 2 | 2 | 2 | |
| 49 | Q012031 | Tornillo exagonal M-5x10 | | 2 | 2 | 2 | 2 | 2 | 2 | |

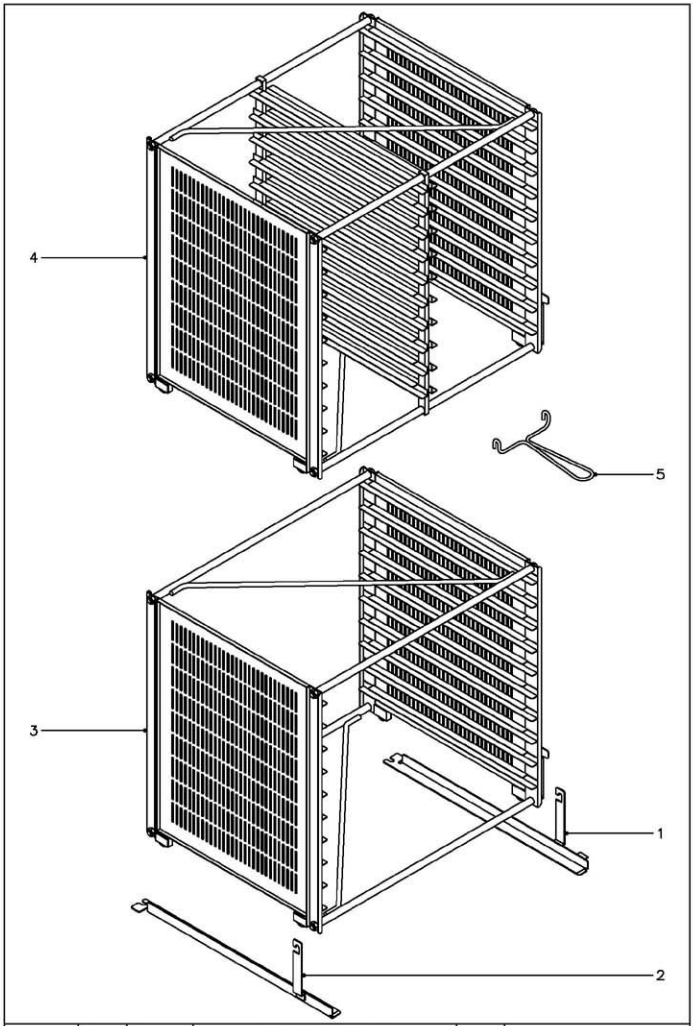


| N plano | Firma | Fecha | Aparato | Lamina | |
|---|---|---|---|---|---|
| C-1308 | | 03-2003 | EXTRUCTURAS PORTABANDEJAS<br>HORNOS A GAS HVG-10/11,10/21,2-10/11 | 4 | Fagor Industrial S.Coop.<br>Onate<br>FAGOR |

| MOD. | HORNOS A GAS HVG | ZONA | EXTRUCTURAS PORTABANDEJAS | PLANO | C-1308 |
|---|---|---|---|---|---|

| ITEM | CODIGO | DENOMINACION | TEXTO | HVG-10/11 | HVG-10/21 | HVG-2-10/11 | NOTAS |
|---|---|---|---|---|---|---|---|
| 1100002631 | | KIT EXTRUCTURA PORTABANDE. 10/11 | | OP. | - | - | OP = Opcional |
| 1 | R672623 | Rail derecho | | OP. | - | - | Optionnel |
| 2 | R672622 | Rail izquierdo | | OP. | - | - | In option |
| 3 | R672617 | Extructura 10/11 | | OP. | - | - | |
| 5 | R672632 | Tirador de extructura | | OP. | - | - | |
| | | | | | | | |
| 1100002634 | | KIT EXTRUCTURA PORTABANDE. 10/21 | | - | OP. | - | |
| 1100002635 | | KIT EXTRUCTURA PORTABANDE. 2-10/11 | | - | - | 1 | |
| 1 | R682659 | Rail derecho | | - | OP. | 1 | |
| 2 | R682658 | Rail izquierdo | | - | OP. | 1 | |
| 3 | R682617 | Extructura 10/21 | | - | OP. | - | |
| 4 | R682618 | Extructura 2-10/11 | | - | - | 1 | |
| 5 | R672632 | Tirador de extructura | | - | OP. | 1 | |

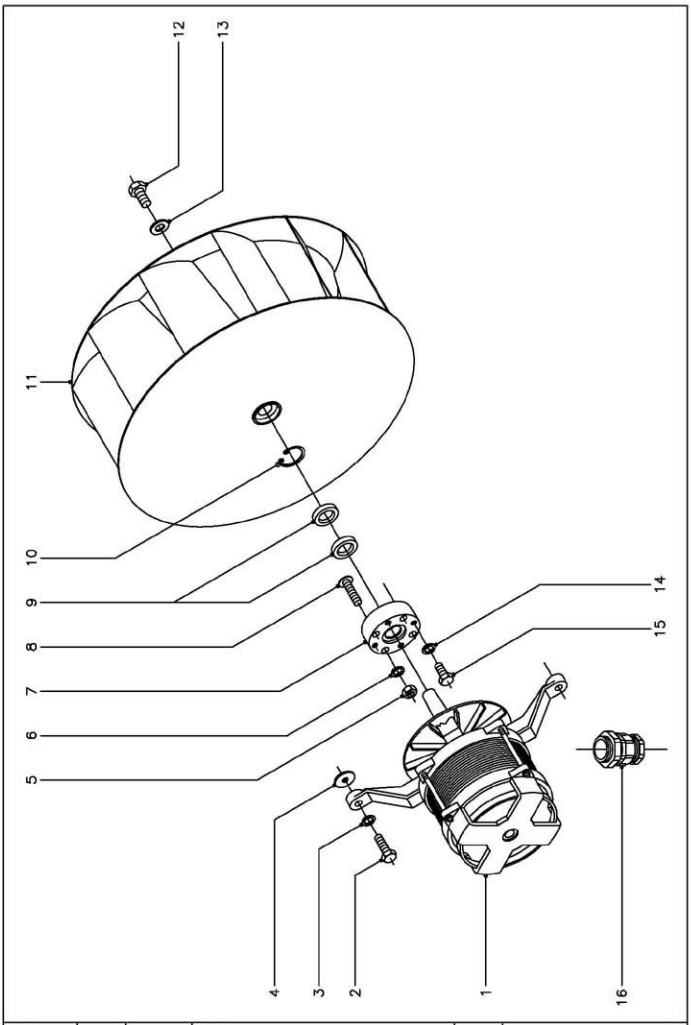


| N plano | Firma | Fecha | Aparato | Lamina | |
|---|---|---|---|---|---|
| C-1309 | | 03-2003 | TURBINA<br>HORNOS A GAS HVG-10/11 Y 10/21 | 5 | Fagor Industrial S.Coop. FAGOR<br>Onate |

| MOD. | HORNOS A GAS HVG | ZONA | TURBINA | PLANO | C-1309 |
|---|---|---|---|---|---|

| ITEM | CODIGO | DENOMINACION | TEXTO | HVG-10/11 | HVG-10/21 | HVG-10/11 UL | HVG-10/21 UL | MFHVG-10/11 | MFHVG-10/21 | | | | NOTAS |
|---|---|---|---|---|---|---|---|---|---|---|---|---|---|
| 1 | R253049 | Motor ( 230/400 V.. 50/60 Hz.) | | 1 | 1 | 1 | 1 | 1 | 1 | | | | |
| 2 | Q012044 | Tornillo exagonal M-6x25 | | 4 | 4 | 4 | 4 | 4 | 4 | | | | |
| 3 | Q262040 | Arandela muelle A-6 | | 4 | 4 | 4 | 4 | 4 | 4 | | | | |
| 4 | Q301304 | Arandela calzo Ø 23xØ 6,5x2 | | 8 | 8 | 8 | 8 | 8 | 8 | | | | |
| 5 | Q162040 | Tuerca exagonal M-6 | | 4 | 4 | 4 | 4 | 4 | 4 | | | | |
| 6 | Q262040 | Arandela muelle A-6 | | 4 | 4 | 4 | 4 | 4 | 4 | | | | |
| 7 | R662623 | Casquillo reten | | 1 | 1 | 1 | 1 | 1 | 1 | | | | |
| 8 | - | Perno M-6 ( Caldeado a cuerpo ) | | 4 | 4 | 4 | 4 | 4 | 4 | | | | |
| 9 | R662627 | Reten Ø 28xØ 17x7 | | 2 | 2 | 2 | 2 | 2 | 2 | | | | |
| 10 | Q302023 | Anillo de seguridad Ø 28x1,2 | | 1 | 1 | 1 | 1 | 1 | 1 | | | | |
| 11 | R253042 | Turbina | | 1 | 1 | 1 | 1 | 1 | 1 | | | | |
| 12 | Q012063 | Tornillo exagonal M-10x20 | | 1 | 1 | 1 | 1 | 1 | 1 | | | | |
| 13 | R763010 | Arandela seguridad Hanning | | 1 | 1 | 1 | 1 | 1 | 1 | | | | |
| 14 | Q232030 | Arandela muelle A-5 | | 4 | 4 | 4 | 4 | 4 | 4 | | | | |
| 15 | Q012031 | Tornillo exagonal M-5x10 | | 4 | 4 | 4 | 4 | 4 | 4 | | | | |
| 16 | R073004 | Prensaestopas | | 1 | 1 | 1 | 1 | 1 | 1 | | | | |

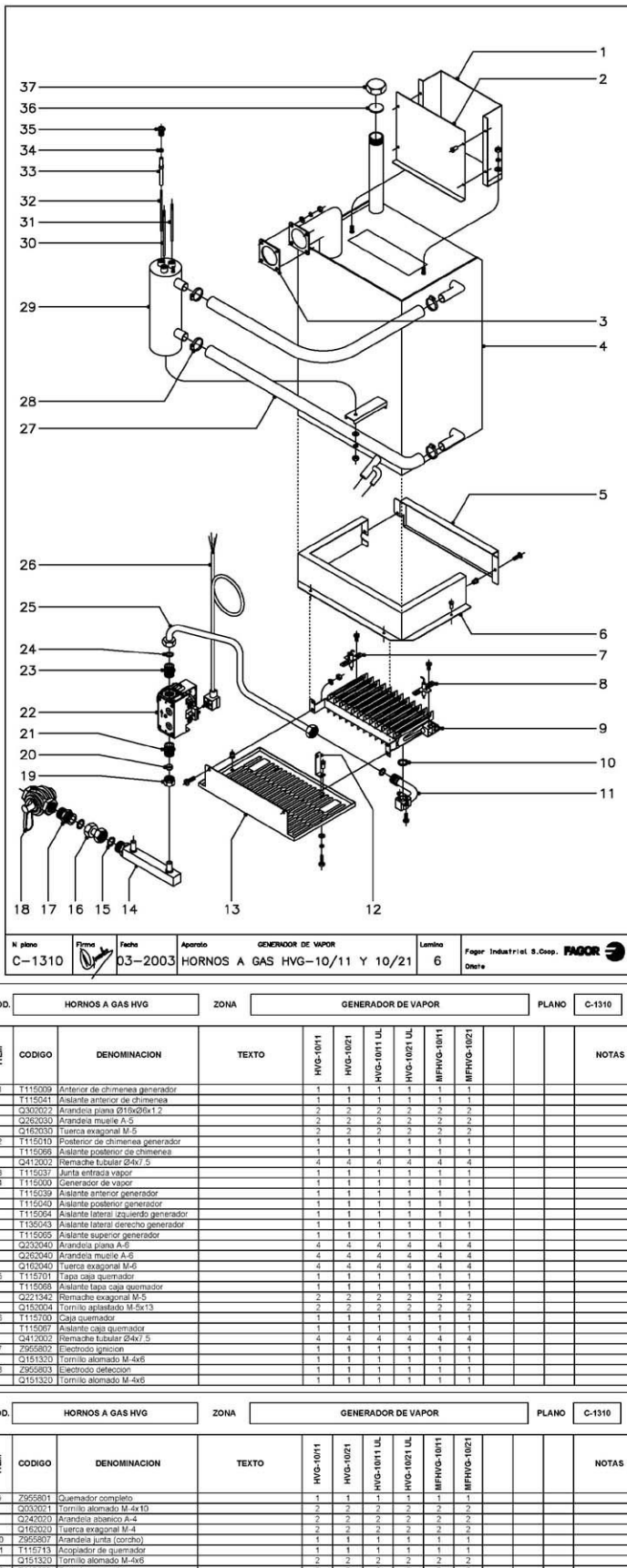


| N plano | Firma | Fecha | Aparato | Lamina | |
|---|---|---|---|---|---|
| C-1310 | | 03-2003 | GENERADOR DE VAPOR HORNOS A GAS HVG-10/11 Y 10/21 | 6 | Fagor Industrial S.Coop. FAGOR Oñate |

| MOD. | HORNOS A GAS HVG | ZONA | GENERADOR DE VAPOR | PLANO | C-1310 |
|---|---|---|---|---|---|

| ITEM | CODIGO | DENOMINACION | TEXTO | HVG-10/11 | HVG-10/21 | HVG-10/11 UL | HVG-10/21 UL | MFHVG-10/11 | MFHVG-10/21 | | | | NOTAS |
|---|---|---|---|---|---|---|---|---|---|---|---|---|---|
| 1 | T115009 | Anterior de chimenea generador | | 1 | 1 | 1 | 1 | 1 | 1 | | | | |
| | T115041 | Aislante anterior de chimenea | | 1 | 1 | 1 | 1 | 1 | 1 | | | | |
| | Q302022 | Arandela plana Ø16xØ6x1.2 | | 2 | 2 | 2 | 2 | 2 | 2 | | | | |
| | Q262030 | Arandela muelle A-5 | | 2 | 2 | 2 | 2 | 2 | 2 | | | | |
| | Q162030 | Tuerca exagonal M-5 | | 2 | 2 | 2 | 2 | 2 | 2 | | | | |
| 2 | T115010 | Posterior de chimenea generador | | 1 | 1 | 1 | 1 | 1 | 1 | | | | |
| | T115066 | Aislante posterior de chimenea | | 1 | 1 | 1 | 1 | 1 | 1 | | | | |
| | Q412002 | Remache tubular Ø4x7.5 | | 4 | 4 | 4 | 4 | 4 | 4 | | | | |
| 3 | T115037 | Junta entrada vapor | | 1 | 1 | 1 | 1 | 1 | 1 | | | | |
| 4 | T115000 | Generador de vapor | | 1 | 1 | 1 | 1 | 1 | 1 | | | | |
| | T115039 | Aislante anterior generador | | 1 | 1 | 1 | 1 | 1 | 1 | | | | |
| | T115040 | Aislante posterior generador | | 1 | 1 | 1 | 1 | 1 | 1 | | | | |
| | T115064 | Aislante lateral izquierdo generador | | 1 | 1 | 1 | 1 | 1 | 1 | | | | |
| | T135043 | Aislante lateral derecho generador | | 1 | 1 | 1 | 1 | 1 | 1 | | | | |
| | T115065 | Aislante superior generador | | 1 | 1 | 1 | 1 | 1 | 1 | | | | |
| | Q232040 | Arandela plana A-6 | | 4 | 4 | 4 | 4 | 4 | 4 | | | | |
| | Q262040 | Arandela muelle A-6 | | 4 | 4 | 4 | 4 | 4 | 4 | | | | |
| | Q162040 | Tuerca exagonal M-6 | | 4 | 4 | 4 | 4 | 4 | 4 | | | | |
| 5 | T115701 | Tapa caja quemador | | 1 | 1 | 1 | 1 | 1 | 1 | | | | |
| | T115068 | Aislante tapa caja quemador | | 1 | 1 | 1 | 1 | 1 | 1 | | | | |
| | Q221342 | Remache exagonal M-5 | | 2 | 2 | 2 | 2 | 2 | 2 | | | | |
| | Q152004 | Tornillo aplastado M-5x13 | | 2 | 2 | 2 | 2 | 2 | 2 | | | | |
| 6 | T115700 | Caja quemador | | 1 | 1 | 1 | 1 | 1 | 1 | | | | |
| | T115067 | Aislante caja quemador | | 1 | 1 | 1 | 1 | 1 | 1 | | | | |
| | Q412002 | Remache tubular Ø4x7.5 | | 4 | 4 | 4 | 4 | 4 | 4 | | | | |
| 7 | Z955802 | Electrodo ignicion | | 1 | 1 | 1 | 1 | 1 | 1 | | | | |
| | Q151320 | Tornillo alomado M-4x6 | | 1 | 1 | 1 | 1 | 1 | 1 | | | | |
| 8 | Z955803 | Electrodo deteccion | | 1 | 1 | 1 | 1 | 1 | 1 | | | | |
| | Q151320 | Tornillo alomado M-4x6 | | 1 | 1 | 1 | 1 | 1 | 1 | | | | |

| MOD. | HORNOS A GAS HVG | ZONA | GENERADOR DE VAPOR | PLANO | C-1310 |
|---|---|---|---|---|---|

| ITEM | CODIGO | DENOMINACION | TEXTO | HVG-10/11 | HVG-10/21 | HVG-10/11 UL | HVG-10/21 UL | MFHVG-10/11 | MFHVG-10/21 | | | | NOTAS |
|---|---|---|---|---|---|---|---|---|---|---|---|---|---|
| 9 | Z955801 | Quemador completo | | 1 | 1 | 1 | 1 | 1 | 1 | | | | |
| | Q032021 | Tornillo alomado M-4x10 | | 2 | 2 | 2 | 2 | 2 | 2 | | | | |
| | Q242020 | Arandela abanico A-4 | | 2 | 2 | 2 | 2 | 2 | 2 | | | | |
| | Q162020 | Tuerca exagonal M-4 | | 2 | 2 | 2 | 2 | 2 | 2 | | | | |
| 10 | Z955807 | Arandela junta (corcho) | | 1 | 1 | 1 | 1 | 1 | 1 | | | | |
| 11 | T115713 | Acoplador de quemador | | 1 | 1 | 1 | 1 | 1 | 1 | | | | |
| | Q151320 | Tornillo alomado M-4x6 | | 2 | 2 | 2 | 2 | 2 | 2 | | | | |
| 12 | T112609 | Soporte quemador | | 2 | 2 | 2 | 2 | 2 | 2 | | | | |
| | Q412002 | Remache tubular Ø4x7.5 | | 4 | 4 | 4 | 4 | 4 | 4 | | | | |
| 13 | T112829 | Tapa de quemador | | 1 | 1 | 1 | 1 | 1 | 1 | | | | |
| | Q221343 | Remache exagonal M-6 | | 2 | 2 | 2 | 2 | 2 | 2 | | | | |
| | Q232040 | Arandela plana A-6 | | 2 | 2 | 2 | 2 | 2 | 2 | | | | |
| | Q262040 | Arandela muelle A-6 | | 2 | 2 | 2 | 2 | 2 | 2 | | | | |
| | Q012042 | Tornillo exagonal M-6x15 | | 2 | 2 | 2 | 2 | 2 | 2 | | | | |
| 14 | T115015 | Entrada de gas | | 1 | 1 | 1 | 1 | 1 | 1 | | | | |
| 15 | Q300019 | Arandela junta Ø23.5xØ17x1.5 | | - | - | 2 | 2 | 2 | 2 | | | | |
| 16 | T115113 | Conduccion para llave de paso | | - | - | 1 | 1 | 1 | 1 | | | | |
| 17 | R695024 | Manguito doble 3/4" | | - | - | 1 | 1 | 1 | 1 | | | | |
| 18 | R725090 | Llave de paso de gas 3/4" | | - | - | 1 | 1 | 1 | 1 | | | | |
| 19 | Q221334 | Tuerca 1/2" ( Para tubo Ø12 ) | | 1 | 1 | 1 | 1 | 1 | 1 | | | | |
| 20 | U055043 | Bicono Ø 12 | | 1 | 1 | 1 | 1 | 1 | 1 | | | | |
| 21 | S205023 | Manguito doble 1/2" | | 1 | 1 | 1 | 1 | 1 | 1 | | | | |
| 22 | Z952201 | Valvula SIT-830 ( 50 Hz ) | | 1 | 1 | - | - | - | - | | | | ( G.L.P.y Gas Natural. 50 Hz ) |
| 22 | Z953501 | Valvula SIT-830 ( 60 Hz ) | | 1 | 1 | 1 | 1 | 1 | 1 | | | | ( G.L.P.y Gas Natural. 60 Hz ) |
| 23 | S205023 | Manguito doble 1/2" | | 1 | 1 | 1 | 1 | 1 | 1 | | | | |
| 24 | Q306012 | Arandela junta Ø18xØ13x1.5 | | 2 | 2 | 2 | 2 | 2 | 2 | | | | |
| 25 | T115109 | Conduccion a quemador generador | | 1 | - | - | - | - | - | | | | |
| 25 | T115102 | Conduccion a quemador generador | | - | - | 1 | - | 1 | - | | | | |
| 25 | T125026 | Conduccion a quemador generador | | - | 1 | - | - | - | - | | | | |

| MOD. | HORNOS A GAS HVG | ZONA | GENERADOR DE VAPOR | PLANO | C-1310 |
|---|---|---|---|---|---|

| ITEM | CODIGO | DENOMINACION | TEXTO | HVG-10/11 | HVG-10/21 | HVG-10/11 UL | HVG-10/21 UL | MFHVG-10/11 | MFHVG-10/21 | | | | NOTAS |
|---|---|---|---|---|---|---|---|---|---|---|---|---|---|
| 25 | T125022 | Conduccion a quemador generador | | - | - | - | - | 1 | - | | | | |
| 26 | R723013 | Conexión valvula SIT | | 1 | 1 | 1 | 1 | 1 | 1 | | | | |
| 27 | 3715600 | Tubo silicona forrado Ø26xØ18x400 | | 2 | 2 | 2 | 2 | 2 | 2 | | | | |
| 28 | Q881304 | Abrazadera 20 - 32 | | 4 | 4 | 4 | 4 | 4 | 4 | | | | |
| 29 | R665046 | Cuerpo de niveles | | 1 | 1 | 1 | 1 | 1 | 1 | | | | |
| | Q232040 | Arandela plana A-6 | | 1 | 1 | 1 | 1 | 1 | 1 | | | | |
| | Q262040 | Arandela muelle A-6 | | 1 | 1 | 1 | 1 | 1 | 1 | | | | |
| | Q162040 | Tuerca exagonal M-6 | | 1 | 1 | 1 | 1 | 1 | 1 | | | | |
| 30 | R345060 | Electrodo de nivel alto L=106 | | 1 | 1 | 1 | 1 | 1 | 1 | | | | |
| 31 | R345063 | Electrodo de nivel bajo L=116 | | 1 | 1 | 1 | 1 | 1 | 1 | | | | |
| 32 | R345064 | Electrodo de masa L=131 | | 1 | 1 | 1 | 1 | 1 | 1 | | | | |
| 33 | R345059 | Cuia aislante de electrodos | | 3 | 3 | 3 | 3 | 3 | 3 | | | | |
| 34 | Q163020 | Tuerca exagonal M-4 | | 6 | 6 | 6 | 6 | 6 | 6 | | | | |
| 35 | R345058 | Racord amarre electrodos | | 3 | 3 | 3 | 3 | 3 | 3 | | | | |
| 36 | R015011 | Arandela junta Ø34x3 | | 1 | 1 | 1 | 1 | 1 | 1 | | | | |
| 37 | R015010 | Tuerca tapon 1" inox. | | 1 | 1 | 1 | 1 | 1 | 1 | | | | |

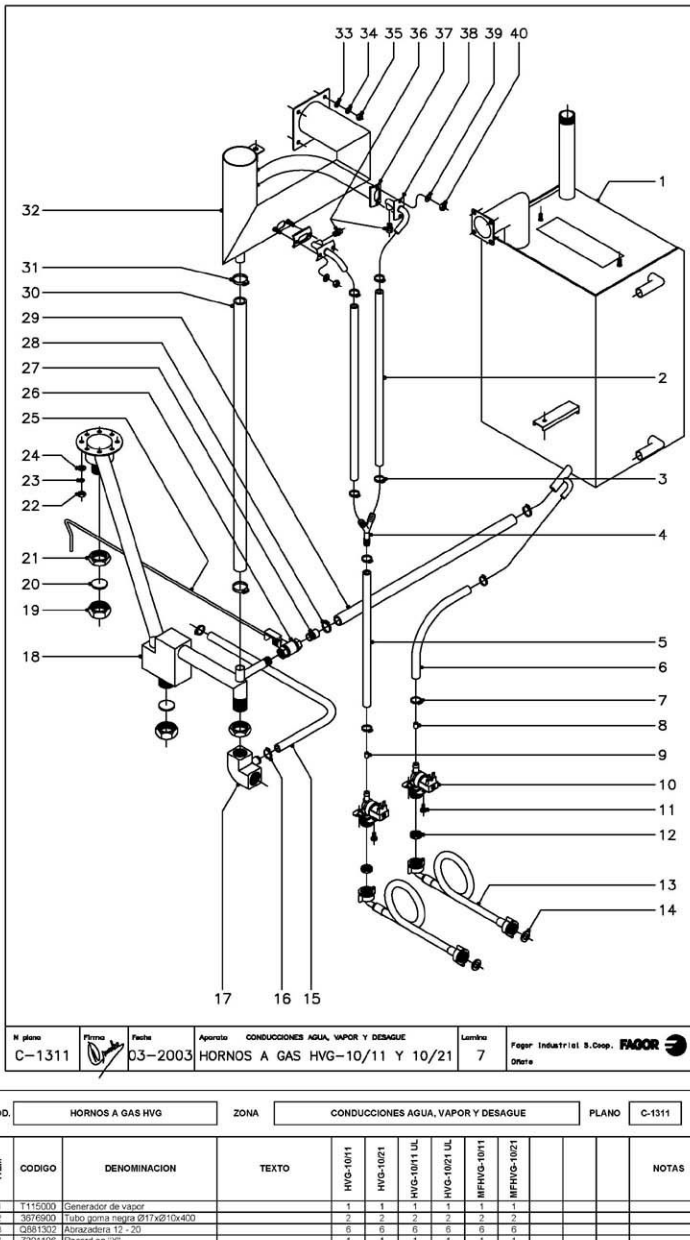


| N plano | Firma | Fecha | Aparato | Lamina | |
|---|---|---|---|---|---|
| C-1311 | | 03-2003 | CONDUCCIONES AGUA, VAPOR Y DESAGUE<br>HORNOS A GAS HVG-10/11 Y 10/21 | 7 | Fagor Industrial S.Coop. FAGOR<br>Dhate |

| MOD. | HORNOS A GAS HVG | ZONA | CONDUCCIONES AGUA, VAPOR Y DESAGUE | PLANO | C-1311 |
|---|---|---|---|---|---|

| ITEM | CODIGO | DENOMINACION | TEXTO | HVG-10/11 | HVG-10/21 | HVG-10/11 UL | HVG-10/21 UL | MFHVG-10/11 | MFHVG-10/21 | | | | NOTAS |
|---|---|---|---|---|---|---|---|---|---|---|---|---|---|
| 1 | T115000 | Generador de vapor | | 1 | 1 | 1 | 1 | 1 | 1 | | | | |
| 2 | 3676900 | Tubo goma negra Ø17xØ10x400 | | 2 | 2 | 2 | 2 | 2 | 2 | | | | |
| 3 | Q881302 | Abrazadera 12 - 20 | | 6 | 6 | 6 | 6 | 6 | 6 | | | | |
| 4 | Z201106 | Racord en "Y" | | 1 | 1 | 1 | 1 | 1 | 1 | | | | |
| 5 | 3676900 | Tubo goma negra Ø17xØ10x500 | | 1 | 1 | 1 | 1 | 1 | 1 | | | | |
| 6 | 3676900 | Tubo goma negra Ø17xØ10x700 | | 1 | 1 | 1 | 1 | 1 | 1 | | | | |
| 7 | Q881302 | Abrazadera 12 - 20 | | 2 | 2 | 2 | 2 | 2 | 2 | | | | |
| 8 | Z601156 | Regulador caudal 8 l./m. (rojo) | | 1 | 1 | 1 | 1 | 1 | 1 | | | | |
| 9 | P443042 | Regulador caudal 3 l./m. (negro) | | 1 | 1 | 1 | 1 | 1 | 1 | | | | |
| 10 | Z701135 | Electrovalvula entrada de agua | | 2 | 2 | 2 | 2 | 2 | 2 | | | | |
| 11 | Q032021 | Tornillo alomado M-6x10 | | 4 | 4 | 4 | 4 | 4 | 4 | | | | |
| 12 | Z701132 | Filtro-junta entrada de agua | | 2 | 2 | 2 | 2 | 2 | 2 | | | | |
| 13 | Z601114 | Manguera entrada de agua | | 2 | 2 | - | - | - | - | | | | |
| 13 | Z602121 | Manguera entrada de agua | | - | - | 2 | 2 | 2 | 2 | | | | |
| 14 | Q307031 | Junta manguera Ø24xØ14x3 | | 2 | 2 | 2 | 2 | 2 | 2 | | | | |
| 15 | 3715600 | Tubo silicona forrado Ø26xØ18x1200 | | 1 | 1 | 1 | 1 | 1 | 1 | | | | |
| 16 | Q881304 | Abrazadera 20 - 32 | | 2 | 2 | 2 | 2 | 2 | 2 | | | | |
| 17 | R665067 | Codo desague | | 1 | 1 | 1 | 1 | 1 | 1 | | | | |
| 18 | T115017 | Conjunto desague completo | | 1 | - | 1 | - | 1 | - | | | | |
| 18 | T125004 | Conjunto desague completo | | - | 1 | - | 1 | - | 1 | | | | |
| 19 | R665053 | Tuerca tapon 1" laton | | 2 | 2 | 2 | 2 | 2 | 2 | | | | |
| 20 | R015011 | Arandela junta Ø34x3 | | 2 | 2 | 2 | 2 | 2 | 2 | | | | |
| 21 | Q223014 | Contratuerca 1" | | 2 | 2 | 2 | 2 | 2 | 2 | | | | |
| 22 | Q162040 | Tuerca exagonal M-6 | | 8 | 8 | 8 | 8 | 8 | 8 | | | | |
| 23 | Q262040 | Arandela muelle A-6 | | 8 | 8 | 8 | 8 | 8 | 8 | | | | |
| 24 | Q232040 | Arandela plana A-6 | | 8 | 8 | 8 | 8 | 8 | 8 | | | | |
| 25 | R342633 | Palanca grifo vaciado | | 1 | - | 1 | - | 1 | - | | | | |
| 25 | R032804 | Palanca grifo vaciado | | - | 1 | - | 1 | - | 1 | | | | |
| 26 | R015034 | Cuerpo grifo vaciado | | 1 | 1 | 1 | 1 | 1 | 1 | | | | |

| MOD. | HORNOS A GAS HVG | ZONA | CONDUCCIONES AGUA, VAPOR Y DESAGUE | PLANO | C-1311 |
|---|---|---|---|---|---|

| ITEM | CODIGO | DENOMINACION | TEXTO | HVG-10/11 | HVG-10/21 | HVG-10/11 UL | HVG-10/21 UL | MFHVG-10/11 | MFHVG-10/21 | | | | NOTAS |
|---|---|---|---|---|---|---|---|---|---|---|---|---|---|
| 27 | R345014 | Manguito grifo vaciado | | 1 | 1 | 1 | 1 | 1 | 1 | | | | |
| 28 | Q881304 | Abrazadera 20 - 32 | | 2 | 2 | 2 | 2 | 2 | 2 | | | | |
| 29 | 3715600 | Tubo silicona forrado Ø26xØ18x750 | | 1 | 1 | 1 | 1 | 1 | 1 | | | | |
| 30 | 3715600 | Tubo silicona forrado Ø26xØ18x500 | | 1 | 1 | 1 | 1 | 1 | 1 | | | | |
| 31 | Q881304 | Abrazadera 20 - 32 | | 2 | 2 | 2 | 2 | 2 | 2 | | | | |
| 32 | T115020 | Retorno de vapor completo | | 1 | 1 | 1 | 1 | 1 | 1 | | | | |
| 33 | Q232040 | Arandela plana A-6 | | 4 | 4 | 4 | 4 | 4 | 4 | | | | |
| 34 | Q242040 | Arandela abanico A-6 | | 4 | 4 | 4 | 4 | 4 | 4 | | | | |
| 35 | Q162040 | Tuerca exagonal M-6 | | 4 | 4 | 4 | 4 | 4 | 4 | | | | |
| 36 | T115089 | Tobera R. 1/8" (Ø1.5) | | 2 | 2 | * | 2 | 2 | 2 | | | | |
| 37 | R725159 | Junta tubo inyector | | 2 | 2 | 2 | 2 | 2 | 2 | | | | |
| 38 | T115112 | Conduccion de vahos completa | | 2 | 2 | 2 | 2 | 2 | 2 | | | | |
| 39 | Q242030 | Arandela abanico A-5 | | 4 | 4 | 4 | 4 | 4 | 4 | | | | |
| 40 | Q162030 | Tuerca exagonal M-5 | | 4 | 4 | 4 | 4 | 4 | 4 | | | | |

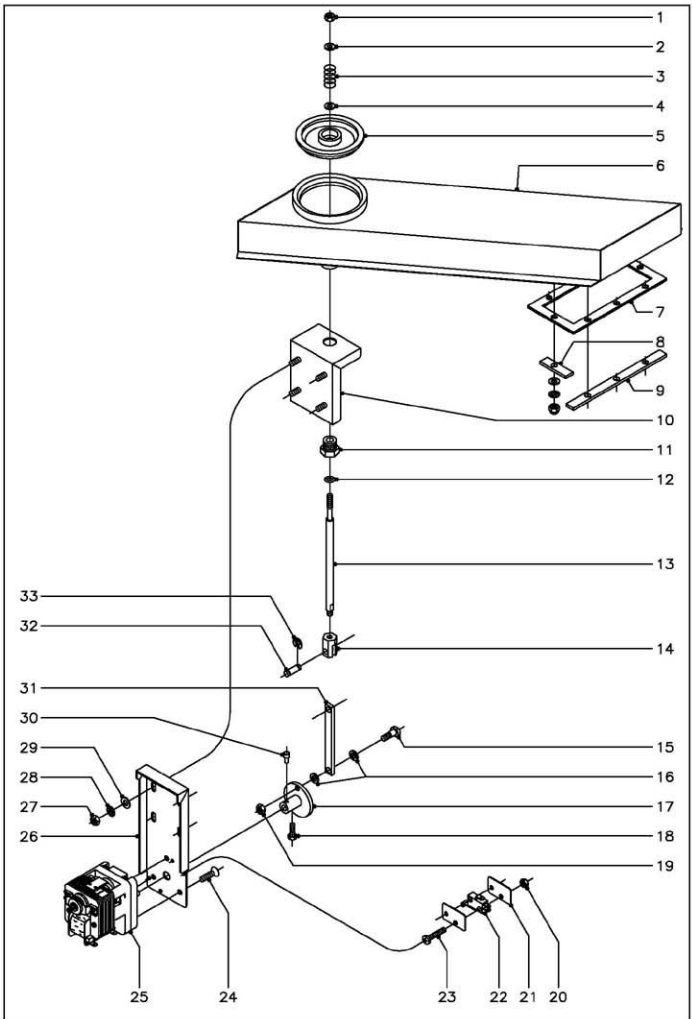


| N plano | Firma | Fecha | Aparato | | Lamina | |
|---|---|---|---|---|---|---|
| C-1312 | | 03-2003 | CIERRE CHIMENEA | HORNOS A GAS HVG-10/11 Y 10/21 | 8 | Fagor Industrial S.Coop. Oñate |

| MOD. | HORNOS A GAS HVG | ZONA | CIERRE CHIMENEA | PLANO | C-1312 |
|---|---|---|---|---|---|

| ITEM | CODIGO | DENOMINACION | TEXTO | HVG-10/11 | HVG-10/21 | HVG-10/11 UL | HVG-10/21 UL | MFHVG-10/11 | MFHVG-10/21 | | | | NOTAS |
|---|---|---|---|---|---|---|---|---|---|---|---|---|---|
| 1 | Q162040 | Tuerca exagonal M-6 | | 2 | 2 | 2 | 2 | 2 | 2 | | | | |
| 2 | Q302022 | Arandela plana Ø16x Ø6x1.2 | | 1 | 1 | 1 | 1 | 1 | 1 | | | | |
| 3 | R725008 | Resorte | | 1 | 1 | 1 | 1 | 1 | 1 | | | | |
| 4 | Q302022 | Arandela plana Ø16x Ø6x1.2 | | 1 | 1 | 1 | 1 | 1 | 1 | | | | |
| 5 | T115115 | Retencion vapores | | 1 | - | 1 | - | 1 | - | | | | |
| 5 | T125027 | Retencion vapores | | - | 1 | - | 1 | - | 1 | | | | |
| 6 | T112650 | Chimenea completa | | 1 | - | 1 | - | 1 | - | | | | |
| 6 | T122625 | Chimenea completa | | - | 1 | - | 1 | - | 1 | | | | |
| 7 | T122630 | Junta chimenea | | 1 | 1 | 1 | 1 | 1 | 1 | | | | |
| 8 | T132634 | Pletina corta refuerzo inferior | | 2 | 2 | 2 | 2 | 2 | 2 | | | | |
| 9 | T122631 | Pletina larga refuerzo inferior | | 2 | 2 | 2 | 2 | 2 | 2 | | | | |
| | Q232030 | Arandela plana A-5 | | 8 | 8 | 8 | 8 | 8 | 8 | | | | |
| | Q242030 | Arandela abanico A-5 | | 8 | 8 | 8 | 8 | 8 | 8 | | | | |
| | Q213131 | Tuerca sombrerete M-5 | | 8 | 8 | 8 | 8 | 8 | 8 | | | | |
| 10 | T135022 | Soporte amarre motor completo | | 1 | 1 | 1 | 1 | 1 | 1 | | | | |
| 11 | R725030 | Tuerca guia retencion | | 1 | 1 | 1 | 1 | 1 | 1 | | | | |
| 12 | Q307087 | Junta torica Ø14,43x Ø9,19x Ø2,62 | | 1 | 1 | 1 | 1 | 1 | 1 | | | | |
| 13 | T135044 | Eje retencion vapores | | 1 | 1 | 1 | 1 | 1 | 1 | | | | |
| 14 | T135045 | Suplemento eje retencion | | 1 | 1 | 1 | 1 | 1 | 1 | | | | |
| 15 | T135009 | Eje de leva | | 1 | 1 | 1 | 1 | 1 | 1 | | | | |
| 16 | Q308013 | Arandela de teflon Ø14x Ø8x2 | | 2 | 2 | 2 | 2 | 2 | 2 | | | | |
| 17 | T135012 | Leva | | 1 | 1 | 1 | 1 | 1 | 1 | | | | |
| 18 | Q012021 | Tornillo exagonal M-4x10 | | 1 | 1 | 1 | 1 | 1 | 1 | | | | |
| 19 | Q162040 | Tuerca exagonal M-6 | | 1 | 1 | 1 | 1 | 1 | 1 | | | | |
| 20 | Q221350 | Tuerca exagonal autoblocante M-3 | | 4 | 4 | 4 | 4 | 4 | 4 | | | | |
| 21 | R010535 | Placa separadora | | 4 | 4 | 4 | 4 | 4 | 4 | | | | |
| 22 | R010534 | Interruptor puerta | | 2 | 2 | 2 | 2 | 2 | 2 | | | | |
| 23 | Q032013 | Tornillo alomado M-3x20 | | 4 | 4 | 4 | 4 | 4 | 4 | | | | |
| 24 | Q042031 | Tornillo avellanado M-5x10 | | 3 | 3 | 3 | 3 | 3 | 3 | | | | |

| MOD. | HORNOS A GAS HVG | ZONA | CIERRE CHIMENEA | PLANO | C-1312 |
|---|---|---|---|---|---|

| ITEM | CODIGO | DENOMINACION | TEXTO | HVG-10/11 | HVG-10/21 | HVG-10/11 UL | HVG-10/21 UL | MFHVG-10/11 | MFHVG-10/21 | | | | NOTAS |
|---|---|---|---|---|---|---|---|---|---|---|---|---|---|
| 25 | T113010 | Motor chimenea | | 1 | 1 | 1 | 1 | 1 | 1 | | | | |
| 26 | T135021 | Escuadra amarre motor | | 1 | 1 | 1 | 1 | 1 | 1 | | | | |
| 27 | Q162040 | Tuerca exagonal M-6 | | 4 | 4 | 4 | 4 | 4 | 4 | | | | |
| 28 | Q242040 | Arandela abanico A-6 | | 4 | 4 | 4 | 4 | 4 | 4 | | | | |
| 29 | Q232040 | Arandela plana A-6 | | 4 | 4 | 4 | 4 | 4 | 4 | | | | |
| 30 | T115116 | Pasador de leva | | 1 | 1 | 1 | 1 | 1 | 1 | | | | |
| 31 | T135047 | Palanca de elevacion | | 1 | 1 | 1 | 1 | 1 | 1 | | | | |
| 32 | T135046 | Eje guia retencion | | 1 | 1 | 1 | 1 | 1 | 1 | | | | |
| 33 | Q271033 | Arandela de seguridad Ø6 | | 2 | 2 | 2 | 2 | 2 | 2 | | | | |

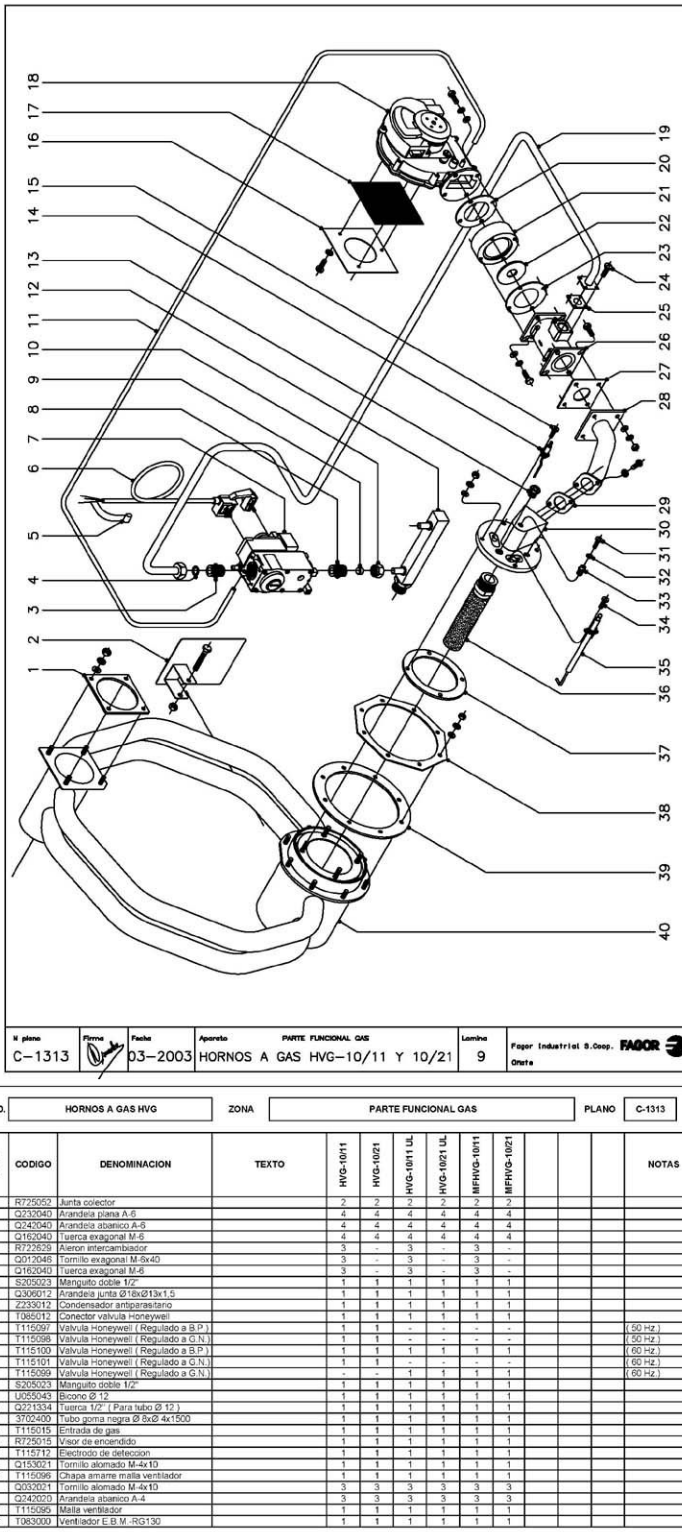


| N plano | Firma | Fecha | Aparato | Lamina |
|---|---|---|---|---|
| C-1313 | | 03-2003 | PARTE FUNCIONAL GAS<br>HORNOS A GAS HVG-10/11 Y 10/21 | 9 |

Fagor Industrial S.Coop. FAGOR
Oñate

| MOD. | HORNOS A GAS HVG | ZONA | PARTE FUNCIONAL GAS | PLANO | C-1313 |
|---|---|---|---|---|---|

| ITEM | CODIGO | DENOMINACION | TEXTO | HVG-10/11 | HVG-10/21 | HVG-10/11 UL | HVG-10/21 UL | MFHVG-10/11 | MFHVG-10/21 | | | | NOTAS |
|---|---|---|---|---|---|---|---|---|---|---|---|---|---|
| 1 | R725052 | Junta colector | | 2 | 2 | 2 | 2 | 2 | 2 | | | | |
| | Q232040 | Arandela plana A-6 | | 4 | 4 | 4 | 4 | 4 | 4 | | | | |
| | Q242040 | Arandela abanico A-6 | | 4 | 4 | 4 | 4 | 4 | 4 | | | | |
| | Q162040 | Tuerca exagonal M-6 | | 4 | 4 | 4 | 4 | 4 | 4 | | | | |
| 2 | R722629 | Aleron intercambiador | | 3 | - | 3 | - | 3 | - | | | | |
| | Q012046 | Tornillo exagonal M-6x40 | | 3 | - | 3 | - | 3 | - | | | | |
| | Q162040 | Tuerca exagonal M-6 | | 3 | - | 3 | - | 3 | - | | | | |
| 3 | S205023 | Manguito doble 1/2" | | 1 | 1 | 1 | 1 | 1 | 1 | | | | |
| 4 | Q306012 | Arandela junta Ø18xØ13x1,5 | | 1 | 1 | 1 | 1 | 1 | 1 | | | | |
| 5 | Z233012 | Condensador antiparasitario | | 1 | 1 | 1 | 1 | 1 | 1 | | | | |
| 6 | T085012 | Conector valvula Honeywell | | 1 | 1 | 1 | 1 | 1 | 1 | | | | |
| 7 | T115097 | Valvula Honeywell ( Regulado a B.P.) | | 1 | 1 | - | - | - | - | | | | ( 50 Hz.) |
| 7 | T115098 | Valvula Honeywell ( Regulado a G.N.) | | 1 | 1 | - | - | - | - | | | | ( 50 Hz.) |
| 7 | T115100 | Valvula Honeywell ( Regulado a B.P.) | | 1 | 1 | 1 | 1 | 1 | 1 | | | | ( 60 Hz.) |
| 7 | T115101 | Valvula Honeywell ( Regulado a G.N.) | | 1 | 1 | - | - | - | - | | | | ( 60 Hz.) |
| 7 | T115099 | Valvula Honeywell ( Regulado a G.N.) | | - | - | 1 | 1 | 1 | 1 | | | | ( 60 Hz.) |
| 8 | S205023 | Manguito doble 1/2" | | 1 | 1 | 1 | 1 | 1 | 1 | | | | |
| 9 | U055043 | Bicono Ø 12 | | 1 | 1 | 1 | 1 | 1 | 1 | | | | |
| 10 | Q221334 | Tuerca 1/2" ( Para tubo Ø 12 ) | | 1 | 1 | 1 | 1 | 1 | 1 | | | | |
| 11 | 3702400 | Tubo goma negra Ø 8xØ 4x1500 | | 1 | 1 | 1 | 1 | 1 | 1 | | | | |
| 12 | T115015 | Entrada de gas | | 1 | 1 | 1 | 1 | 1 | 1 | | | | |
| 13 | R725015 | Visor de encendido | | 1 | 1 | 1 | 1 | 1 | 1 | | | | |
| 14 | T115712 | Electrodo de deteccion | | 1 | 1 | 1 | 1 | 1 | 1 | | | | |
| 15 | Q153021 | Tornillo alomado M-4x10 | | 1 | 1 | 1 | 1 | 1 | 1 | | | | |
| 16 | T115095 | Chapa amarre malla ventilador | | 1 | 1 | 1 | 1 | 1 | 1 | | | | |
| | Q032021 | Tornillo alomado M-4x10 | | 3 | 3 | 3 | 3 | 3 | 3 | | | | |
| | Q242020 | Arandela abanico A-4 | | 3 | 3 | 3 | 3 | 3 | 3 | | | | |
| 17 | T115095 | Malla ventilador | | 1 | 1 | 1 | 1 | 1 | 1 | | | | |
| 18 | T083000 | Ventilador E.B.M.-RG130 | | 1 | 1 | 1 | 1 | 1 | 1 | | | | |

| MOD. | HORNOS A GAS HVG | ZONA | PARTE FUNCIONAL GAS | PLANO | C-1313 |
|---|---|---|---|---|---|

| ITEM | CODIGO | DENOMINACION | TEXTO | HVG-10/11 | HVG-10/21 | HVG-10/11 UL | HVG-10/21 UL | MFHVG-10/11 | MFHVG-10/21 | | | | NOTAS |
|---|---|---|---|---|---|---|---|---|---|---|---|---|---|
| 19 | T115078 | Conduccion de gas completa | | 1 | - | - | - | - | - | | | | |
| 19 | T115104 | Conduccion de gas completa | | - | - | 1 | - | 1 | - | | | | |
| 19 | T125021 | Conduccion de gas completa | | - | 1 | - | - | - | - | | | | |
| 19 | T125023 | Conduccion de gas completa | | - | - | - | 1 | - | 1 | | | | |
| 20 | T115081 | Junta acoplamiento ventilador y mixer | | 1 | 1 | 1 | 1 | 1 | 1 | | | | |
| 21 | T115076 | Acoplamiento ventilador mixer | | 1 | 1 | 1 | 1 | 1 | 1 | | | | |
| 22 | T115082 | Arandela regulacion ventilador Ø 18 | | 1 | 1 | 1 | 1 | 1 | 1 | | | | ( Butano-Propano ) |
| 22 | T115083 | Arandela regulacion ventilador Ø 20 | | 1 | 1 | 1 | 1 | 1 | 1 | | | | ( Gas Natural ) |
| 23 | T115081 | Junta acoplamiento ventilador y mixer | | 1 | 1 | 1 | 1 | 1 | 1 | | | | |
| 24 | Q032021 | Tornillo alomado M-4x10 | | 4 | 4 | 4 | 4 | 4 | 4 | | | | |
| 25 | T115080 | Junta conduccion mixer | | 1 | 1 | 1 | 1 | 1 | 1 | | | | |
| 26 | T115075 | Mixer 35 KW. | | 1 | 1 | 1 | 1 | 1 | 1 | | | | |
| 27 | T115079 | Junta mixer conducto | | 1 | 1 | 1 | 1 | 1 | 1 | | | | |
| 28 | T115077 | Conducto mixer tapa principal | | 1 | 1 | 1 | 1 | 1 | 1 | | | | |
| 29 | T095021 | Junta conducto tapa | | 1 | 1 | 1 | 1 | 1 | 1 | | | | |
| 30 | T115782 | Tapa principal | | 1 | 1 | 1 | 1 | 1 | 1 | | | | |
| 31 | Q152024 | Tornillo avellanado M-4x8 | | 2 | 2 | 2 | 2 | 2 | 2 | | | | |
| 32 | R725061 | Junta toma de presion | | 2 | 2 | 2 | 2 | 2 | 2 | | | | |
| 33 | R725017 | Boquilla toma de presion | | 2 | 2 | 2 | 2 | 2 | 2 | | | | |
| 34 | Q153021 | Tornillo alomado M-4x10 | | 2 | 2 | 2 | 2 | 2 | 2 | | | | |
| 35 | T115781 | Electrodo de ignicion | | 1 | 1 | 1 | 1 | 1 | 1 | | | | |
| 36 | T115710 | Quemador Furigas ( 10/11 y 10/21 ) | | 1 | 1 | 1 | 1 | 1 | 1 | | | | |
| 37 | R725055 | Junta de tapa principal | | 1 | 1 | 1 | 1 | 1 | 1 | | | | |
| 38 | - | Brida amarre intercambiador | | - | - | - | - | - | - | | | | Caldeado a cuerpo de horno |
| 39 | R725051 | Junta camara combustion | | 1 | 1 | 1 | 1 | 1 | 1 | | | | |
| 40 | R725701 | Intercambiador completo | | 1 | 1 | 1 | 1 | 1 | 1 | | | | |
| | Q232040 | Arandela plana A-6 | | 12 | 12 | 12 | 12 | 12 | 12 | | | | |
| | Q262040 | Arandela muelle A-6 | | 12 | 12 | 12 | 12 | 12 | 12 | | | | |
| | Q163040 | Tuerca exagonal M-6 | | 12 | 12 | 12 | 12 | 12 | 12 | | | | |

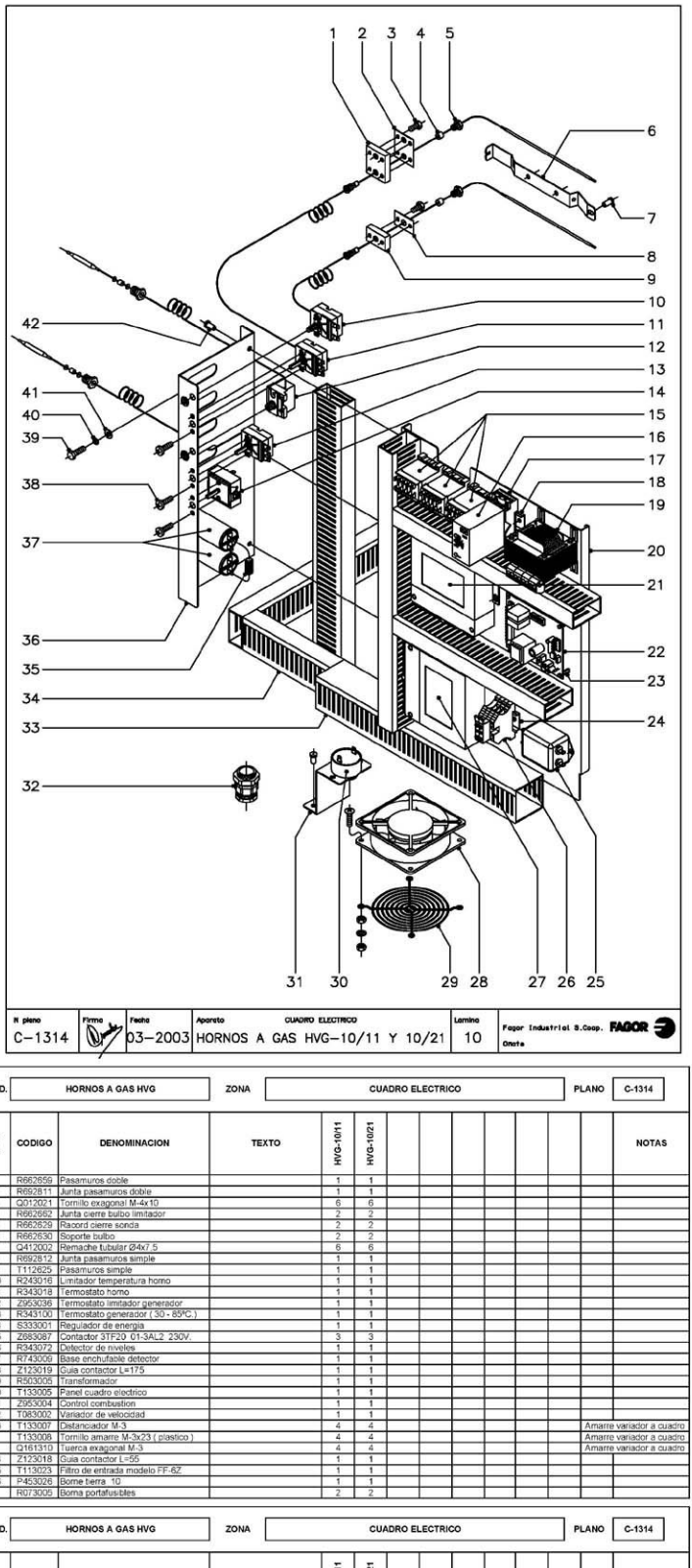


| N pieno | Firma | Fecha | Aparato | Lamina | |
|---|---|---|---|---|---|
| C–1314 | | 03–2003 | CUADRO ELECTRICO<br>HORNOS A GAS HVG–10/11 Y 10/21 | 10 | Fagor Industrial S.Coop.<br>Onate<br>FAGOR |

MOD. HORNOS A GAS HVG | ZONA CUADRO ELECTRICO | PLANO C-1314

| ITEM | CODIGO | DENOMINACION | TEXTO | HVG-10/11 | HVG-10/21 | NOTAS |
|---|---|---|---|---|---|---|
| 1 | R662659 | Pasamuros doble | | 1 | 1 | |
| 2 | R692811 | Junta pasamuros doble | | 1 | 1 | |
| 3 | Q012021 | Tornillo exagonal M-4x10 | | 6 | 6 | |
| 4 | R662662 | Junta cierre bulbo limitador | | 2 | 2 | |
| 5 | R662629 | Racord cierre sonda | | 2 | 2 | |
| 6 | R662630 | Soporte bulbo | | 2 | 2 | |
| 7 | Q412002 | Remache tubular Ø4x7,5 | | 6 | 6 | |
| 8 | R692812 | Junta pasamuros simple | | 1 | 1 | |
| 9 | T112625 | Pasamuros simple | | 1 | 1 | |
| 10 | R243016 | Limitador temperatura horno | | 1 | 1 | |
| 11 | R343018 | Termostato horno | | 1 | 1 | |
| 12 | Z953036 | Termostato limitador generador | | 1 | 1 | |
| 13 | R343100 | Termostato generador ( 30 - 85ºC.) | | 1 | 1 | |
| 14 | S333001 | Regulador de energia | | 1 | 1 | |
| 15 | Z983087 | Contactor 3TF20 01-3AL2 230V. | | 3 | 3 | |
| 16 | R343072 | Detector de niveles | | 1 | 1 | |
| 17 | R743009 | Base enchufable detector | | 1 | 1 | |
| 18 | Z123019 | Guia contactor L=175 | | 1 | 1 | |
| 19 | R503005 | Transformador | | 1 | 1 | |
| 20 | T133005 | Panel cuadro electrico | | 1 | 1 | |
| 21 | Z953004 | Control combustion | | 1 | 1 | |
| 22 | T083002 | Variador de velocidad | | 1 | 1 | |
| 23 | T133007 | Distanciador M-3 | | 4 | 4 | Amarre variador a cuadro |
| | T133008 | Tornillo amarre M-3x23 ( plastico ) | | 4 | 4 | Amarre variador a cuadro |
| | Q1613110 | Tuerca exagonal M-3 | | 4 | 4 | Amarre variador a cuadro |
| 24 | Z123018 | Guia contactor L=55 | | 1 | 1 | |
| 25 | T113023 | Filtro de entrada modelo FF-6Z | | 1 | 1 | |
| 26 | P453026 | Borne tierra 10 | | 1 | 1 | |
| | R073005 | Borna portafusibles | | 2 | 2 | |

MOD. HORNOS A GAS HVG | ZONA CUADRO ELECTRICO | PLANO C-1314

| ITEM | CODIGO | DENOMINACION | TEXTO | HVG-10/11 | HVG-10/21 | NOTAS |
|---|---|---|---|---|---|---|
| | R723015 | Fusible cristal 10 A. | | 2 | 2 | |
| | Z263303 | Tope final | | 1 | 1 | |
| 27 | Z953004 | Control combustion | | 1 | 1 | |
| 28 | Z103069 | Ventilador 230 V., 50-60 Hz. | | 2 | 2 | |
| 29 | T113015 | Proteccion ventilador | | 2 | 2 | |
| | Q042022 | Tornillo avellanado M-4x15 | | 8 | 8 | |
| | Q242020 | Arandela abanico A-4 | | 8 | 8 | |
| | Q162020 | Tuerca exagonal M-4 | | 16 | 16 | |
| 30 | R693067 | Zumbador | | 1 | 1 | |
| 31 | T143001 | Soporte zumbador | | 1 | 1 | |
| | Q412002 | Remache tubular Ø 4x7,5 | | 2 | 2 | |
| 32 | R073004 | Prensaestopas | | 1 | 1 | |
| 33 | 3715510 | Canaleta unex ( 60x60x longitud ) | | 1 | 1 | |
| 34 | 3715520 | Canaleta unex ( 60x30x longitud ) | | 7 | 7 | |
| 35 | R073008 | Cableado PTC | | 1 | 1 | |
| 36 | T133006 | Apoyo componentes | | 1 | 1 | |
| 37 | R293000 | Condensador 14 mf. | | 2 | 2 | |
| 38 | Q151320 | Tornillo alomado M-4x6 | | 6 | 6 | |
| 39 | Q012042 | Tornillo exagonal M-6x15 | | 4 | 4 | |
| 40 | Q262040 | Arandela muelle A-6 | | 4 | 4 | |
| 41 | Q232040 | Arandela plana A-6 | | 4 | 4 | |
| 42 | Q412002 | Remache tubular Ø 4x7,5 | | 3 | 3 | |

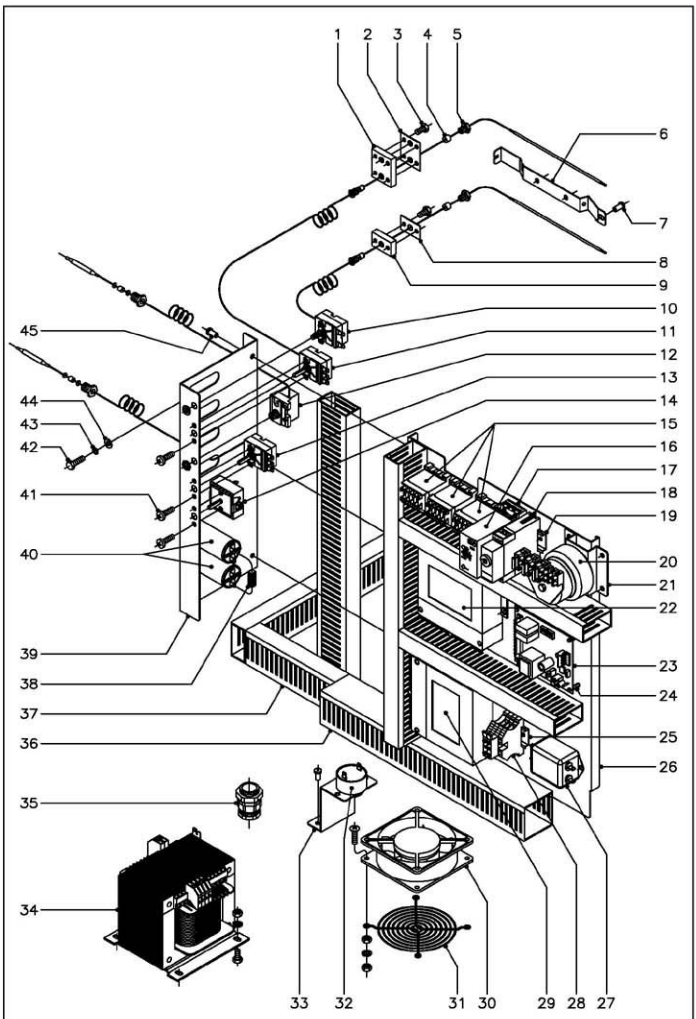


| N plano | Firma | Fecha | Aparato | Lamina | |
|---|---|---|---|---|---|
| C-1315 | | 03-2003 | CUADRO ELECTRICO ( UL ) HORNOS A GAS HVG-10/11 Y 10/21 | 11 | Fagor Industrial S.Coop. Onate |

| MOD. | HORNOS A GAS HVG | ZONA | CUADRO ELECTRICO | PLANO | C-1315 |
|---|---|---|---|---|---|

| ITEM | CODIGO | DENOMINACION | TEXTO | HVG-10/11 UL | HVG-10/21 UL | MFHVG-10/11 | MFHVG-10/21 | NOTAS |
|---|---|---|---|---|---|---|---|---|
| 1 | R662659 | Pasamuros doble | | 1 | 1 | 1 | 1 | |
| 2 | R692811 | Junta pasamuros doble | | 1 | 1 | 1 | 1 | |
| 3 | Q012021 | Tornillo exagonal M-4x10 | | 6 | 6 | 6 | 6 | |
| 4 | R662662 | Junta cierre bulbo limitador | | 2 | 2 | 2 | 2 | |
| 5 | R662629 | Raoord cierre sonda | | 2 | 2 | 2 | 2 | |
| 6 | R662630 | Soporte bulbo | | 2 | 2 | 2 | 2 | |
| 7 | Q412002 | Remache tubular Ø4x7,5 | | 6 | 6 | 6 | 6 | |
| 8 | R692812 | Junta pasamuros simple | | 1 | 1 | 1 | 1 | |
| 9 | T112625 | Pasamuros simple | | 1 | 1 | 1 | 1 | |
| 10 | R243016 | Limitador temperatura horno | | 1 | 1 | 1 | 1 | |
| 11 | R343018 | Termostato horno | | 1 | 1 | 1 | 1 | |
| 12 | Z953036 | Termostato limitador generador | | 1 | 1 | 1 | 1 | |
| 13 | R343100 | Termostato generador ( 30 - 85ºC ) | | 1 | 1 | 1 | 1 | |
| 14 | S333001 | Regulador de energia | | 1 | 1 | 1 | 1 | |
| 15 | Z683087 | Contactor 3TF20 01-3AL2 230V. | | 3 | 3 | 3 | 3 | |
| 16 | R743031 | Detector de niveles | | 1 | 1 | 1 | 1 | |
| 17 | R743009 | Base enchufable detector | | 1 | 1 | 1 | 1 | |
| 18 | Z123022 | Temporizador | | 1 | 1 | 1 | 1 | En version 120 V. |
| 19 | Z123019 | Guia contactor L=175 | | 1 | 1 | 1 | 1 | |
| 19 | Z123018 | Guia contactor L=55 | | 1 | 1 | 1 | 1 | |
| 20 | R723063 | Transformador ( UL ) | | 1 | 1 | 1 | 1 | |
| 21 | T112653 | Soporte transformador ( UL ) | | 1 | 1 | 1 | 1 | |
| 22 | T113060 | Control combustion y encendido | | 1 | 1 | 1 | 1 | |
| s/n | T113058 | Soporte control combus. y encen. | | 1 | 1 | 1 | 1 | |
| 23 | T083002 | Variador de velocidad | | 1 | 1 | 1 | 1 | |
| 24 | T133007 | Distanciador M-3 | | 4 | 4 | 4 | 4 | Amarre variador a cuadro |
| | T133008 | Tornillo amarre M-3x23 ( plastico ) | | 4 | 4 | 4 | 4 | Amarre variador a cuadro |
| | Q161310 | Tuerca exagonal M-3 | | 4 | 4 | 4 | 4 | Amarre variador a cuadro |
| 25 | Z123018 | Guia contactor L=55 | | 1 | 1 | 1 | 1 | |

| MOD. | HORNOS A GAS HVG | ZONA | CUADRO ELECTRICO | PLANO | C-1315 |
|---|---|---|---|---|---|

| ITEM | CODIGO | DENOMINACION | TEXTO | HVG-10/11 UL | HVG-10/21 UL | MFHVG-10/11 | MFHVG-10/21 | NOTAS |
|---|---|---|---|---|---|---|---|---|
| 26 | T133005 | Panel cuadro electrico | | 1 | 1 | 1 | 1 | |
| 27 | T113023 | Filtro de entrada modelo FF-6Z | | 1 | 1 | 1 | 1 | |
| 28 | P453026 | Borne tierra 10 | | 1 | 1 | 1 | 1 | |
| | R073005 | Borna portafusibles | | 2 | 2 | 2 | 2 | |
| | R723015 | Fusible cristal 10 A. ( 208/240 V ) | | 2 | 2 | 2 | 2 | En version 208/240 V. |
| | T113078 | Fusible cristal 12,5 A. ( 120 V ) | | 2 | 2 | 2 | 2 | En version 120 V. |
| | Z263303 | Tope final | | 1 | 1 | 1 | 1 | |
| 29 | T113060 | Control combustion y encendido | | 1 | 1 | 1 | 1 | |
| s/n | T113058 | Soporte control combus. y encen. | | 1 | 1 | 1 | 1 | |
| 30 | Z103066 | Ventilador 230 V. 50-60 Hz. | | 2 | 2 | 2 | 2 | |
| 31 | T113015 | Proteccion ventilador | | 2 | 2 | 2 | 2 | |
| | Q042022 | Tornillo avellanado M-4x15 | | 8 | 8 | 8 | 8 | |
| | Q242020 | Arandela abanico A-4 | | 8 | 8 | 8 | 8 | |
| | Q162020 | Tuerca exagonal M-4 | | 16 | 16 | 16 | 16 | |
| 32 | T113079 | Zumbador 24 V. | | 1 | 1 | 1 | 1 | |
| s/n | T113077 | Resistencia zumbador 33 KH. 2W | | 1 | 1 | 1 | 1 | |
| 33 | T143001 | Soporte zumbador | | 1 | 1 | 1 | 1 | |
| | Q412002 | Remache tubular Ø 4x7,5 | | 2 | 2 | 2 | 2 | |
| 34 | R723052 | Transformador Siemens | | 1 | 1 | 1 | 1 | En version 120 V. |
| | Q012041 | Tornillo exagonal M-6x10 | | 4 | 4 | 4 | 4 | |
| | Q242040 | Arandela abanico A-6 | | 4 | 4 | 4 | 4 | |
| | Q162040 | Tuerca exagonal M-6 | | 4 | 4 | 4 | 4 | |
| 35 | R073004 | Prensaestopas | | 1 | 1 | 1 | 1 | |
| 36 | 3715510 | Canaleta unex ( 60x60x longitud ) | | 1 | 1 | 1 | 1 | |
| 37 | 3715520 | Canaleta unex ( 60x30x longitud ) | | 7 | 7 | 7 | 7 | |
| 38 | R073008 | Cableado PTC | | 1 | 1 | 1 | 1 | |
| 39 | T133006 | Apoyo componentes | | 1 | 1 | 1 | 1 | |
| 40 | R293000 | Condensador 14 mf. | | 2 | 2 | 2 | 2 | |
| 41 | Q151320 | Tornillo alomado M-4x6 | | 6 | 6 | 6 | 6 | |

| MOD. | HORNOS A GAS HVG | ZONA | CUADRO ELECTRICO | PLANO | C-1315 |
|---|---|---|---|---|---|

| ITEM | CODIGO | DENOMINACION | TEXTO | HVG-10/11 UL | HVG-10/21 UL | MFHVG-10/11 | MFHVG-10/21 | NOTAS |
|---|---|---|---|---|---|---|---|---|
| 42 | Q012042 | Tornillo exagonal M-6x15 | | 4 | 4 | 4 | 4 | |
| 43 | Q262040 | Arandela muelle A-6 | | 4 | 4 | 4 | 4 | |
| 44 | Q232040 | Arandela plana A-6 | | 4 | 4 | 4 | 4 | |
| 45 | Q412002 | Remache tubular Ø 4x7,5 | | 3 | 3 | 3 | 3 | |

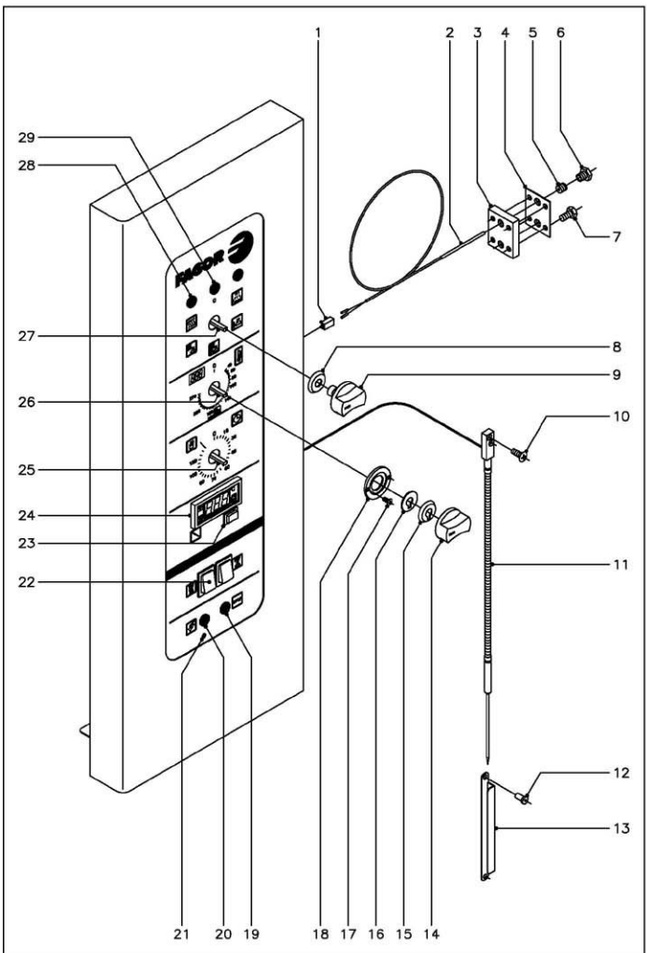


| N. plano | Firma | Fecha | Aparato | Lamina | Fagor Industrial S.Coop. |
|---|---|---|---|---|---|
| C-1316 | | 03-2003 | PARTE ELECTRICA PORTAMANDOS<br>HORNOS A GAS HVG-10/11 Y 10/21 | 12 | Oñate |

| MOD. | HORNOS A GAS HVG | ZONA | PARTE ELECTRICA PORTAMANDOS | PLANO | C-1316 |
|---|---|---|---|---|---|

| ITEM | CODIGO | DENOMINACION | TEXTO | HVG-10/11 | HVG-10/21 | HVG-10/11 UL | HVG-10/21 UL | MFHVG-10/11 | MFHVG-10/21 | | | | | NOTAS |
|---|---|---|---|---|---|---|---|---|---|---|---|---|---|---|
| 1 | R663092 | Conector 2 vias | | 1 | 1 | 1 | 1 | 1 | 1 | | | | | |
| 2 | R663090 | Conjunto termopar L=1400 | | 1 | 1 | 1 | 1 | 1 | 1 | | | | | |
| 3 | R662659 | Pasamuros doble | | 1 | 1 | 1 | 1 | 1 | 1 | | | | | |
| 4 | R662611 | Junta pasamuros doble | | 1 | 1 | 1 | 1 | 1 | 1 | | | | | |
| 5 | R662652 | Bicono cierre sonda | | 1 | 1 | 1 | 1 | 1 | 1 | | | | | |
| 6 | R662629 | Racord cierre sonda | | 1 | 1 | 1 | 1 | 1 | 1 | | | | | |
| 7 | Q012021 | Tornillo exagonal M-4x10 | | 4 | 4 | 4 | 4 | 4 | 4 | | | | | |
| 8 | R663046 | Junta ( conmutadores ) | | 2 | 2 | 2 | 2 | 2 | 2 | | | | | |
| 9 | R663062 | Boton de mando Ø6 ( conmutadores ) | | 2 | 2 | 2 | 2 | - | - | | | | | |
| 9 | R663070 | Boton de mando Ø6 ( conmutadores ) | | - | - | - | - | 2 | 2 | | | | | |
| 10 | Q042022 | Tornillo avellanado M-4x15 | | 2 | 2 | 2 | 2 | 2 | 2 | | | | | |
| 11 | T113007 | Conjunto sonda nucleo | | 1 | 1 | 1 | 1 | 1 | 1 | | | | | |
| 12 | Q412002 | Remache tubular Ø 4x7,5 | | 2 | 2 | 2 | 2 | 2 | 2 | | | | | |
| 13 | R672643 | Soporte de sonda | | 1 | 1 | 1 | 1 | 1 | 1 | | | | | |
| 14 | R663063 | Boton de mando Ø6 (termos.electro.) | | 1 | 1 | 1 | 1 | - | - | | | | | |
| 14 | R663071 | Boton de mando Ø6 (termos.electro.) | | - | - | - | - | 1 | 1 | | | | | |
| 15 | R663045 | Junta (termostato electronico ) | | 1 | 1 | 1 | 1 | 1 | 1 | | | | | |
| 16 | R662610 | Arandela guia | | 1 | 1 | 1 | 1 | 1 | 1 | | | | | |
| 17 | Q151346 | Tornillo avellanado M-3x5 | | 2 | 2 | 2 | 2 | 2 | 2 | | | | | |
| 18 | R662609 | Guia boton de mando | | 1 | 1 | 1 | 1 | 1 | 1 | | | | | |
| 19 | T113040 | Piloto rojo | | 1 | 1 | 1 | 1 | 1 | 1 | | | | | |
| 20 | R693056 | Piloto ambar | | 1 | 1 | 1 | 1 | 1 | 1 | | | | | |
| 21 | Z953035 | Termostato limitador aviso | | 1 | 1 | 1 | 1 | 1 | 1 | | | | | |
| 22 | Z213033 | Pulsador rearme generador y horno | | 2 | 2 | 2 | 2 | 2 | 2 | | | | | |
| 23 | R743008 | Interruptor regulacion sonda | | 1 | 1 | 1 | 1 | 1 | 1 | | | | | |
| 24 | T133004 | Termostato digital tipo K ( ºC ) | | 1 | 1 | 1 | 1 | 1 | 1 | | | | | |
| 24 | R743035 | Termostato digital ( ºF ) | | - | - | 1 | 1 | 1 | 1 | | | | | |
| 25 | R723000 | Temporizador manual | | 1 | 1 | 1 | 1 | 1 | 1 | | | | | |
| 26 | R743013 | Termostato electronico 270º C | | 1 | 1 | 1 | 1 | 1 | 1 | | | | | |
| 26 | R693058 | Termostato electronico 500ºF | | - | - | 1 | 1 | 1 | 1 | | | | | |
| | R663036 | Fijacion circuito termost. electroni. | | 4 | 4 | 4 | 4 | 4 | 4 | | | | | |
| 27 | T113030 | Conmutador de funciones | | 1 | 1 | 1 | 1 | 1 | 1 | | | | | |
| 29 | R693056 | Piloto ambar | | 2 | 2 | 2 | 2 | 2 | 2 | | | | | |
| 29 | R693055 | Piloto verde | | 1 | 1 | 1 | 1 | 1 | 1 | | | | | |

| MOD. | HORNOS A GAS HVG | ZONA | VARIOS | PLANO | |
|---|---|---|---|---|---|

| ITEM | CODIGO | DENOMINACION | TEXTO | HVG-10/11 | HVG-10/21 | | | | | | | | | NOTAS |
|---|---|---|---|---|---|---|---|---|---|---|---|---|---|---|
| | T116502 | Folleto de instrucciones | | 1 | 1 | | | | | | | | | |
| | T113031 | Esquema electrico adhesivo | | 1 | 1 | | | | | | | | | Plano HC-75606 |
| | T113028 | Leyenda esquema electrico | | 1 | 1 | | | | | | | | | Plano HC-75483 |
| | T113032 | Esquema electrico de montaje | | 1 | 1 | | | | | | | | | Plano HD-12786 |
| | T113029 | Instalacion electrica | | 1 | 1 | | | | | | | | | |
| | T113035 | Cableado luz interior | | 1 | 1 | | | | | | | | | |
| | R663094 | Cableado luz puerta | | 1 | 1 | | | | | | | | | |
| | 3713900 | Funda roja o negra Ø 6,4x500 | | 1 | 1 | | | | | | | | | |
| | T113036 | Cableado variador soplante | | 1 | 1 | | | | | | | | | |
| | T113022 | Cable de encendido L=500 | | 1 | - | | | | | | | | | |
| | T123000 | Cable de encendido L=700 | | - | 1 | | | | | | | | | |
| | T113033 | Cable de encendido L=2000 | | 1 | - | | | | | | | | | |
| | T123010 | Cable de encendido L=2200 | | - | 1 | | | | | | | | | |

| MOD. | HORNOS A GAS HVG | ZONA | VARIOS | PLANO | |
|---|---|---|---|---|---|

| ITEM | CODIGO | DENOMINACION | TEXTO | HVG-10/11 UL | HVG-10/21 UL | MFHVG-10/11 | MFHVG-10/21 | | | | | | | NOTAS |
|---|---|---|---|---|---|---|---|---|---|---|---|---|---|---|
| | T126513 | Folleto de instrucciones | | 1 | 1 | - | - | | | | | | | |
| | T126514 | Folleto de instrucciones | | - | - | 1 | 1 | | | | | | | |
| | T113038 | Esquema electrico adhes. (120 V.) | | 1 | 1 | 1 | 1 | | | | | | | Plano HC-75884 |
| | T113061 | Esquema electrico ad. (208/240 V.) | | 1 | 1 | 1 | 1 | | | | | | | Plano HC-76511 |
| | T113028 | Leyenda esquema electrico | | 1 | 1 | 1 | 1 | | | | | | | Plano HC-75483 |
| | T113059 | Instalacion electrica | | 1 | 1 | 1 | 1 | | | | | | | |
| | T113021 | Cableado luz interior | | 1 | 1 | 1 | 1 | | | | | | | |
| | R693078 | Cableado luz puerta | | 1 | 1 | 1 | 1 | | | | | | | |
| | 3713900 | Funda roja o negra Ø 6,4x500 | | 1 | 1 | 1 | 1 | | | | | | | |
| | T113022 | Cable de encendido L=500 | | 1 | - | 1 | - | | | | | | | |
| | T123000 | Cable de encendido L=700 | | - | 1 | - | 1 | | | | | | | |
| | T113033 | Cable de encendido L=2000 | | 1 | - | 1 | - | | | | | | | |
| | T123010 | Cable de encendido L=2200 | | - | 1 | - | 1 | | | | | | | |
| | R723053 | Manguera de alimentaci. (120 V.) | | 1 | - | 1 | - | | | | | | | |
| | T113075 | Instalacion transformador ( 120 V.) | | 1 | 1 | 1 | 1 | | | | | | | |

| MOD. | HORNOS A GAS HVG | ZONA | PIEZAS ESPECIFICAS PARA LOS DISTINTOS GASES (B.P. Y G.N.) Y DISTINTAS FRECUENCIAS (50 Y 60 Hz.) | PLANO | C-1310<br>C-1313 |
|---|---|---|---|---|---|

| ITEM | CODIGO | DENOMINACION | TEXTO | HVG-10/11 | HVG-10/21<br>HVG-2-10/11 | HVG-10/11A<br>HVG-2-10/11A | HVG-10/21A<br>HVG-2-10/21A | HVG-10/11 UL<br>MFHVG-10/11 | HVG-10/21 UL<br>MFHVG-10/21 | | | | | NOTAS |
|---|---|---|---|---|---|---|---|---|---|---|---|---|---|---|
| | | **BUTANO - PROPANO 50 Hz.** | | | | | | | | | | | | |
| s/n | Z955899 | Inyector Ø 0,7 (En quemad. item 9) | | 12 | 12 | 12 | 12 | - | - | | | | | Plano C-1310 |
| 22 | Z952201 | Valvula SIT-830 .50 Hz. (B.P.y G.N.) | | 1 | 1 | 1 | 1 | - | - | | | | | Plano C-1310 |
| 7 | T115097 | Valvula Honeywell 50Hz. (B.P.) | | 1 | 1 | 1 | 1 | - | - | | | | | Plano C-1313 |
| 22 | T115082 | Arandela regulacion ventilador Ø18 | | 1 | 1 | 1 | 1 | - | - | | | | | Plano C-1313 |
| | | **BUTANO - PROPANO 60 Hz.** | | | | | | | | | | | | |
| s/n | Z955899 | Inyector Ø 0,7 (En quemad. item 9) | | 12 | 12 | 12 | 12 | 12 | 12 | | | | | Plano C-1310 |
| 22 | Z953501 | Valvula SIT-830 .60 Hz. (B.P.y G.N.) | | 1 | 1 | 1 | 1 | 1 | 1 | | | | | Plano C-1310 |
| 7 | T115100 | Valvula Honeywell 60Hz. (B.P.) | | 1 | 1 | 1 | 1 | 1 | 1 | | | | | Plano C-1313 |
| 22 | T115082 | Arandela regulacion ventilador Ø18 | | 1 | 1 | 1 | 1 | 1 | 1 | | | | | Plano C-1313 |
| | | **GAS NATURAL 50 Hz.** | | | | | | | | | | | | |
| s/n | Z956104 | Inyector Ø 1,1 (En quemad. item 9) | | 12 | 12 | - | - | - | - | | | | | Plano C-1310 |
| s/n | Z956109 | Inyector Ø 1,2 (En quemad. item 9) | | - | - | 12 | 12 | - | - | | | | | Plano C-1310 |
| 22 | Z952201 | Valvula SIT-830 .50 Hz. (B.P.y G.N.) | | 1 | 1 | 1 | 1 | - | - | | | | | Plano C-1310 |
| 7 | T115099 | Valvula Honeywell 50Hz. (G.N.) | | 1 | 1 | 1 | 1 | - | - | | | | | Plano C-1313 |
| 22 | T115083 | Arandela regulacion ventilador Ø20 | | 1 | 1 | 1 | 1 | - | - | | | | | Plano C-1313 |
| | | **GAS NATURAL 60 Hz.** | | | | | | | | | | | | |
| s/n | Z956104 | Inyector Ø 1,1 (En quemad. item 9) | | 12 | 12 | 12 | 12 | 12 | 12 | | | | | Plano C-1310 |
| 22 | Z953501 | Valvula SIT-830 .60 Hz. (B.P.y G.N.) | | 1 | 1 | 1 | 1 | 1 | 1 | | | | | Plano C-1310 |
| 7 | T115101 | Valvula Honeywell 60Hz. (G.N.) | | 1 | 1 | 1 | 1 | - | - | | | | | Plano C-1313 |
| 7 | T115099 | Valvula Honeywell 60Hz. (G.N.) | | - | - | - | - | 1 | 1 | | | | | Plano C-1313 |
| 22 | T115083 | Arandela regulacion ventilador Ø20 | | 1 | 1 | 1 | 1 | 1 | 1 | | | | | Plano C-1313 |

| MOD. | HORNOS A GAS HVG<br>HORNOS A GAS VGT ( VAUBAN ) | ZONA | SERIGRAFIA PORTAMANDOS ( VAUBAN ) | PLANO | C-1305 |
|---|---|---|---|---|---|

| ITEM | CODIGO | DENOMINACION | TEXTO | HVG-10/11<br>VGT-10/11 | HVG-10/21<br>VGT-10/21 | | | | | | | | | NOTAS |
|---|---|---|---|---|---|---|---|---|---|---|---|---|---|---|
| 15 | T113025 | Serigrafia VGT -VAUBAN | | 1 | 1 | | | | | | | | | |