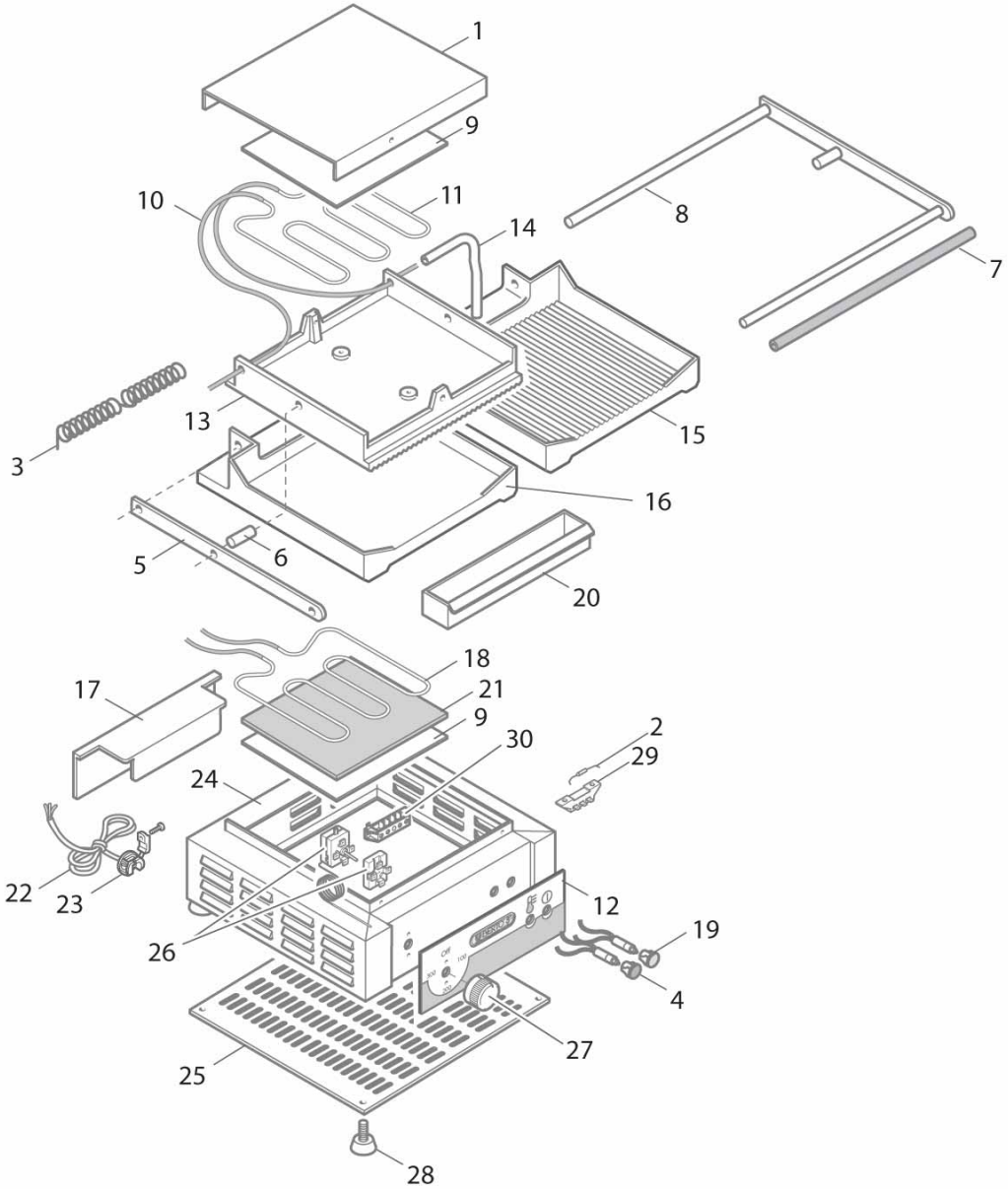
1
9
10
11
14
8
7
13
3
15
16
5
6
20
18
17
21
9
30
2
29
24
22
23
12
19
26
4
27
25
28

PSL/LD

Pos. Item	Codice Code	Descrizione	Item Description	Designation articles	Artikelbeschreibung	Decripciòn artìculos	N° pezzi - No. pieces					
												PSL/LD
1	30804200	Coperchio ps/pd-ld	Lid ps/pd-ld	Couvercle ps/pd-ld	Deckel ps/pd-ld	Tapa ps/pd-ld						1
2	30978100	Termofusibile 152°c - 15a	Thermofuse 152°c - 15a	Thermofusible 152°c - 15a	Thermoschmelzdraht 152°c - 15a	Termofusible 152°c - 15a						1
3	30612800	Mo. ps-pd/ld ps-pm-pd/st-sx	Sp. ps-pd/ld ps-pm-pd/st-sx	Re. ps-pd/ld ps-pm-pd/st-sx	Feder ps-pd/ld ps-pm-pd/st-sx	Muelle para pfadeha ps-pd/ld ps-pm-pd/st-sx						1
4	30168500	Spia arancio 230v d.10mmt150Ø	Orange lamp 230v	Temoin lumineux orange 230v	Orange kontrollampe 230v	Piloto naranja 230v						1
5	30875700	Manico laterale ps/pm/pd zn	La. handle ps/pm/pd zn	Ma. latÉral ps/pm/pd zn	Seit. griff ps/pm/pd zn	Asa la. ps/pm/pd zn						1
6	30908100	Perno laterale per piastra zn	Lateral pin	Pivot latÉral	Seitlicher bolzen	Perno lateral						1
7	30875300	Manico moplen rosso ps	Red moplen pin ps	Ma. moplen rouge ps	Roter moplen griff ps	Asa moplen roja ps						1
8	30876100	Ass. maniglia dx ps	Handle assembly rh ps	Poignee complete droite ps	Kompletter griff ps	Conjunto asa dcha. ps						2
9	30868800	Lastra protez. ferro piccola	Single protective sheet	Plaque de protection simple	Einzelne schutzplatte	Placa de proteccion individual						2
10	30193400	Tu. vetrotex d.5 l.250 mm	Glass tube	Tube verre	Isolierend kleines rohr fuer	Tubo vidrio						1
11	30022500	Res.compl.700w-230v ps/pd	Complete 700w-230v ps/pd	Resistance complete 700w-230v	Obere heiz. 700w 230 v	Resistencia completa 700w-230v						1
12	30899700	Pannello piastra sing. bertos	Berto's adhesive panel	Panneau adhÉsif berto's	Haftendes paneel berto's	Panel adhesivo berto's						1
13	30842500	Fusione cop. rigato ps-pd/ld	Ri. cast iron lid ps-pd/ld	Couvercle en fonte rainurÉ	Geriefter gussdeckel	Tapa estriada de hierro fundido						1
14	30810100	Curvetta passafili dx ps/pm/pd	Rh angle conduit	Co. de protection cÂbles droite	R.gebogenes stÜck draht.	Codo para cables derecho						1
15	30841400	Fusione inferiore psr/ld	Lower ribbed cast iron plate	Plaque inf. en fonte rainurÉe	Gerieftes unteres gussstÜck	Placa inf. est. en hierro fundido						-
16	30841600	Fusione inferiore psl/ld	Lower smooth cast iron plate	Plaque inf. en fonte lisse	Glattes unteres gussstÜck	Placa inf. lisa en hierro fundido						1
17	30790900	Carter psl-psr/ld	Ca. psl-psr/ld	Ca. psl-psr/ld	Ge. psl-psr/ld	Ca. psl-psr/ld						1
18	30023500	Res.inf.comp.1000w-230v ps/p	1000w-230v 1000 w 230v ps/p	Resistance 1000w-230v ps/p	Un. heizkoerper 1000 w 230v	Resistencia 1000w-230v ps/p						1
19	30168800	Spia verde 230v d.10mmt150Ø	Green lamp 230v	Temoin lumineux vert 230v	Grune kontrollampe 230v	Piloto verde 230v						1
20	30791800	Ass.cassetto raccoglisughi ps	Drip tray ps	Bac recueille-sauces ps	Sossen-auffangschale ps	Cajón-colector de jugos ps						1
21	30921800	Qua. isomart ps/pd-pm/vtr 210x170x4	Isomart panel 210x170x4	Tableau isomart 210x170x4	Isoli. trenner 210x170x4	Panel isomart 210x170x4						1
22	30192400	Cavo 3x1.5 ps/pm	Power su. cable 3 x 1,5mm	Cable d'alim. 3 x 1,5mm	Versorg. 3 x 1,5mm	Cable de alime. 3x1,5 mm.						1
23	30185400	Passacavo pa 277 i.m.q.	Cable guide	Passe-cÂble	KabelfÜhrung	Aislador pasapanel						1
24	30863600	ass. involucro base ps/ld-st-	Base enc. ps/ld-st-	Couv. base ps/ld-st-	HÜlle basis ps/ld-st-	Envolvente base ps/ld-st-						1
25	30837900	Fondo ps/ld-st-sx	Bo. ps/ld-st-sx	Fond ps/ld-st-sx	Boden ps/ld-st-sx	Fondo ps/ld-st-sx	fondo ps/ld-st-sx					1
26	30064600	Termostato 270°c. + commutatore	270°c thermostat + cycle selector	Ther. 270°c + commutateur de cycle	Ther. 270°c + umschalter zyklus	Termostato 270°c + conmutador						1
27	35876200	Manopola rossa p. 6x4.6 a o°	Red knob 6x4.6 o° c	Manette rouge 6x4.6 o° c	Drehknopf 6x4.6 o° c	Mando rojo 6x4.6 o° c						1
27	35877200	Man. rossa p. 6x4.6 a o° ral3000	Red knob p. 6x4.6 a o° ral3000	Ma. rouge p. 6x4.6 a o° ral3000	Drehknopf p. 6x4.6 a o° ral3000	Mando rojo p. 6x4.6 a o° ral3000						1
28	30684100	Piedi. d.30xm8condado basso h.6mm	Foot h.6mm	Pied h.6mm	Fuss h.6mm	Pata h.6mm						4
29	30184800	Morsettiera laterale fv 77/3	Lateral terminal board fv 77/3	Bornier latÉral fv 77/3	Sei. klemmenleiste fv 77/3	Bornera lateral fv 77/3						1
30	30183800	Morsettiera a 3 poli fv 110 b	Terminal board 3 poles	Bornier 3 poles	Klemmenleiste	Bornera 3 polos						1