SIMAG

SC 120
SM 120
SCR 120

"J" SERIES

R 404 A VERSION

SPARE PARTS LIST
CATALOGO RICAMBI
CATALOGUE PIÈCES DÉTACHÉES
ERSATZTEILENKATALOG

REV. 11/2006

PAGE PAGINA PAGE SEITE	TABLE OF CONTENTS	INDICE	TABLE DES MATIÈRES	INHALTVERZEICHNIS
1	TABLE OF CONTENTS	INDICE	TABLE DES MATIÈRES	INHALTVERZEICHNIS
2-3	TABLE 1 - UNIT PANELS	TAVOLA 1 - ASSIEME MOBILE	TABLE 1 - ENS. CARROSSERIE	TAFEL 1 - MACHINE GEHÄUSE
4-5	TABLE 2 - WATER SYSTEM PUMP CIRCUIT	TAVOLA 2 - SISTEMA IDRAULICO CIRCUITO POMPA	TABLE 2 - SISTEME HYDRAULIQUE CIRCUIT POMPE	TAFEL 2 - WASSER SYSTEM KREISLAUFPUMP
6-7	TABLE 3 - WATER SYSTEM BIN - WATER INLET/DRAIN	TAVOLA 3 - SISTEMA IDRAULICO CELLA - ENTRATA/USCITA ACQUA	TABLE 3 - SISTEME HYDRAULIQUE CHAMBRE - ALIM./ECOULEM. EAU	TAFEL 3 - WASSER SYSTEM ZELLE-WASSER EINGANG / ENTLEERUNG
8-9	TABLE 4 - REFRIGERANT SYSTEM AIR COOLED	TVOLA 4 - SISTEMA REFRIGERANTE RAFFR. AD ARIA	TABLE 4 - CIRCUIT FRIGORIFIQUE REFROID. A AIR	TAFEL 4 - GEFRIERSYSTEM LUFTGEKUEHLT
10-11	TABLE 5 - REFRIGERANT SYSTEM WATER SYSTEM	TAVOLA 5 - SISTEMA REFRIGERANTE RAFFR. AD ACQUA	TABLE 5 - CIRCUIT FRIGORIFIQUE REFROID. A EAU	TAFEL 5 - GEFRIERSYSTEM WASSERGEKUEHLT
12	COMPRESSOR AND ELECTRIC COMPONENT CHARTS	TABELLA COMPRESSORI E COMPONENTI ELETTRICI	LISTE DES COMPRESSEURS ET COMPOSANTS ELECTRIQUE	KOMPRESSOR UND ELEKTRISCHER TEILLISTE

SC 120 - SM 120 - SCR 120

TAVOLA 1

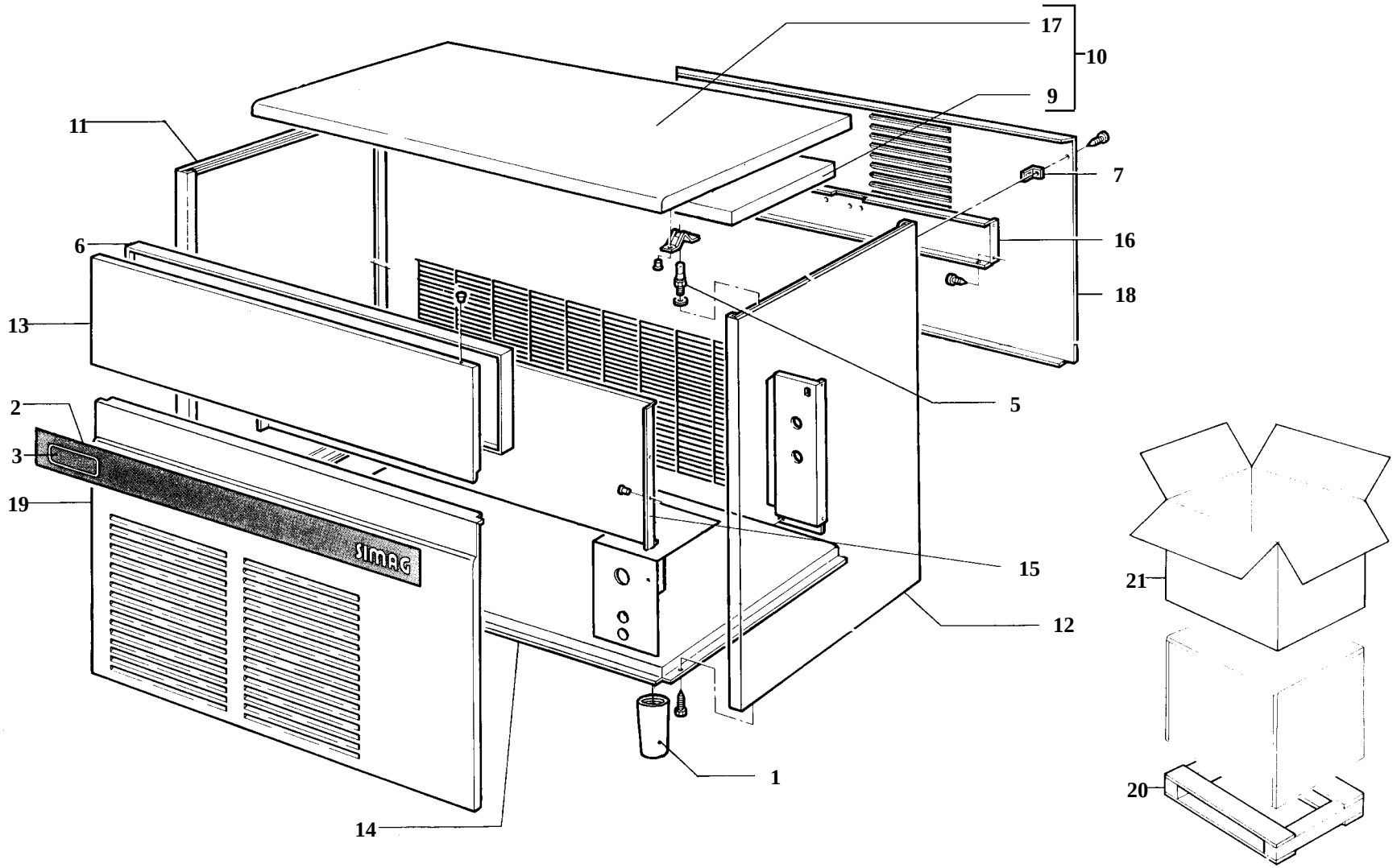

SC 120 - SM 120 - SCR 120

TAVOLA 1

ITEM NO POS. NO REP. NO REF. NO	PART NO - CODICE REFERENCE - STUECK NR **SC120**	**SM120**	**SCR120**	DESCRIPTION	DESCRIZIONE	DESIGNATION	BESCHREIBUNG
1	660638 00			LEVELLING FOOT	PIEDE REGOLABILE	PIED RÉGLABE	GERÄTEFUSS
2	650805 41			NAME PLATE	TARGA SERIGRAFATA	PLAQUETTE MARQUE	MARCHENSCHILD
3	650805 41	650805 27	650805 32	MODEL LABEL	TARGA MODELLO	PLAQUETTE MODELE	MODELLBEZEICHNUNG
5	650790 00			STUD	PERNO	AXE	STIFT
6-13	060491 26			BIN DOOR ASSY	SPORTELLO COMPLETO	PORTE CABINE COMPLETT	ENTNAHMKLAPPE KOMPLETT
7	650806 00			REAR STUD	PERNO POSTERIORE	AXE ARRIÉRE	TRÄGER-HINTEN
9	Z1AM089			TOP PANEL INSULATION	ISOLAMENTO PANNELLO SUPER.	PANNEAU ISOLANT	ISOLATION
10-17	781432 04			TOP PANEL S.S. ASSY	ASS. PANNELLO SUPERIORE INOX	ENS. COUVERCLE	DECKEL GESAMTHEIT KOMPLETT
11	721869 00			LEFT SIDE PANEL S.S.	PANNELLO SINISTRO INOX	JOUE GAUCHE ACIER INOX	LINKE GEHÄUSESEITE EDELSTAHAL
12	721868 00			RIGHT SIDE PANEL S.S.	PANNELLO DESTRO INOX	JOUE DROITE ACIER INOX	RECHTEGEHÄUSESE EDELSTAHAL
14	781406 11			BASE ASSY	ASSIEME BASAMENTO	PLAQUE DE BASE	GRUNDPLATTE
15	784285 01			FRONT SUPPORT	TRAVERSO ANTERIORE	TRAVERSE ANTERIEURE	VORDERE VERBINDUNGSSTREBE
16	703228 00			PUMP SUPPORT PANEL	TRAVERSO SUPPORTO POMPA	TRAVERSE SUPPORT POMPE	HALTERUNG PUMPE
18	702285 00			REAR PANEL	PANNELLO POSTERIORE	PANNEAU POSTERIEUR	HINTERE ABDECKUNG
19	721568 02			FRONTAL PANEL S.S.	PANNELLO ANTERIORE INOX	PANNEAU AVANT ACIER INOX	VORDERWAND EDELSTAHL
20	680333 03			PALLET	BASE IMBALLO	SOCLE	PALETTE
21	Z1IM015			CARTON	SCATOLA IMBALLO	CARTON	KARTON

SC 120 - SM 120 - SCR 120

TAVOLA 2

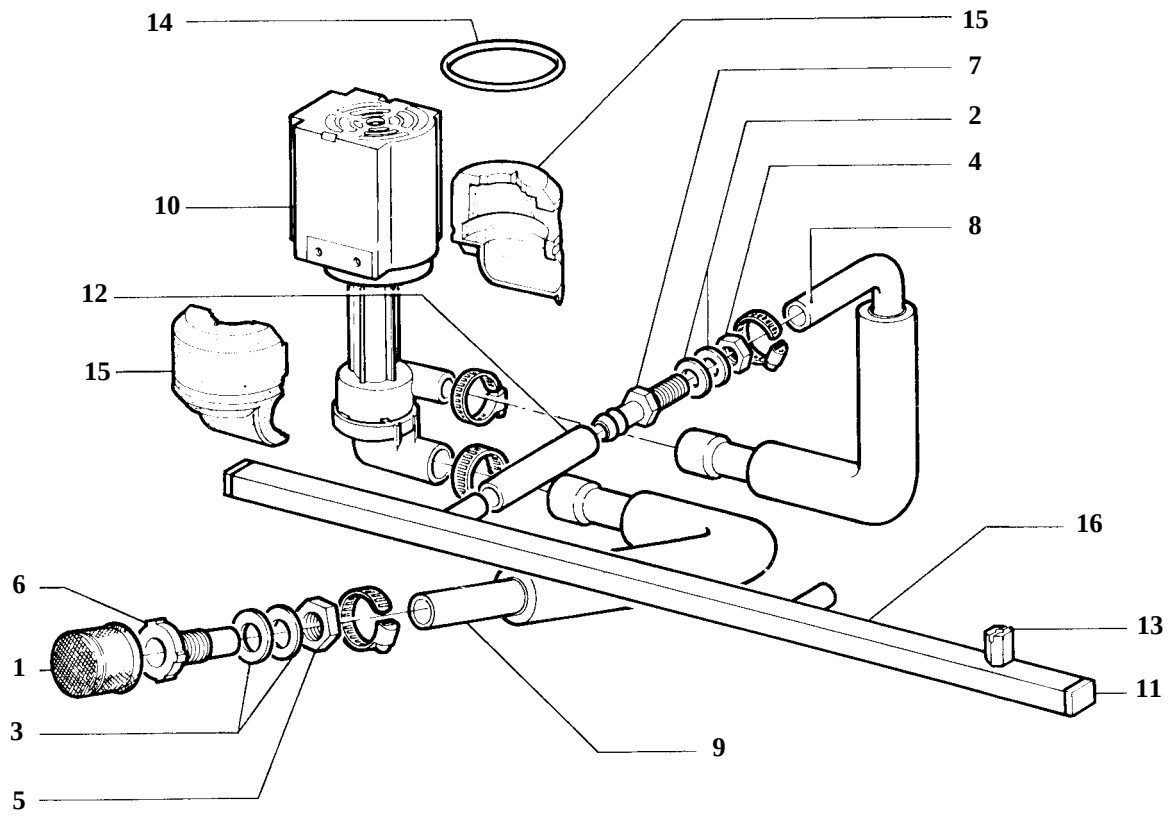

SC 120 - SM 120 - SCR 120

TAVOLA 2

ITEM NO POS. NO REP. NO REF. NO	PART NO - CODICE REFERENCE - STUECK NR SC120	SM120	SCR120	DESCRIPTION	DESCRIZIONE	DESIGNATION	BESCHREIBUNG
1	Z1AC012			PUMP FEEDING FILTER	FILTRO ASPIRAZIONE POMPA	FILTRE ASPIRATION POMPE	PUMPENANSAUGFILTER
2	Z1AC013			WASHER	RONDELLA	RONDELLE	UNTERLEGSCHEIBE
3	Z1AC014			WASHER	RONDELLA	RONDELLE	UNTERLEGSCHEIBE
4	Z1AC016			NUT	DADO	ECROU	MUTTER
5	Z1AC017			NUT	DADO	ECROU	MUTTER
6	Z1AC029			PUMP FEEDING PIPE FITTING	RACCORDO ASPIRAZIONE POMPA	RACCORD ASPIRATION POMPE	ANSAUGANSCHLUSSTUCK
7	Z1AC030			PUMP FEEDING PIPE FITTING	RACCORDO MANDATA POMPA	RACCORD REFOULEMENT POMPE	PUMPENABFLUSSANSCHLUSSTUCK
8	Z1ID006			PUMP INLET WATER PIPE	TUBO MANDATA POMPA	TUYAU DE REFOULEMENT POMPE	PUMPENABFLUSSCHLAUCK
9	610189 01			PUMP FEEDING PIPE	TUBO ASPIRAZIONE POMPA	TUYAU D'ASPIRATION POMPE	PUMPENAGSAUGSCHLAUCH
10	620415 00			WATER PUMP ASSY	ASSIEME POMPA	ENSEMBLE POMPE A EAU	WASSERPUMPE
11	660557 00			PLUG MAINFOLD	TAPPO PER COLLETTORE	BOUCHON POUR COLLECTEUR	STOPFEN
12	281830 04			SPRAY BAR FEEDING PIPE	TUBO ALIMENTAZIONE COLLETTORE	TUYAU D'ALIMENTATION EAU	ANCHLUSSSCHLAUCH KOLLEKTOR
13	660558 00			SPRAY JET	SPRUZZATORI	GICLEURS	SPRÜHDÜSEN
14	Z1ID042			O-RING	ANELLO O.R.	JOINT TORIQUE	O-RING
15	Z1ID043			PUMP COVER INSULATION	ISOLAMENTO POMPA	COUPELLE ISOLANT POUR POMPE	PUMPENISOLATION
16	650665 09	650665 10	650665 25	SPRAY BAR	COLLETTORE	COLLECTEUR	KOLLECTOR

SC 120 - SM 120 - SCR 120

TAVOLA 3

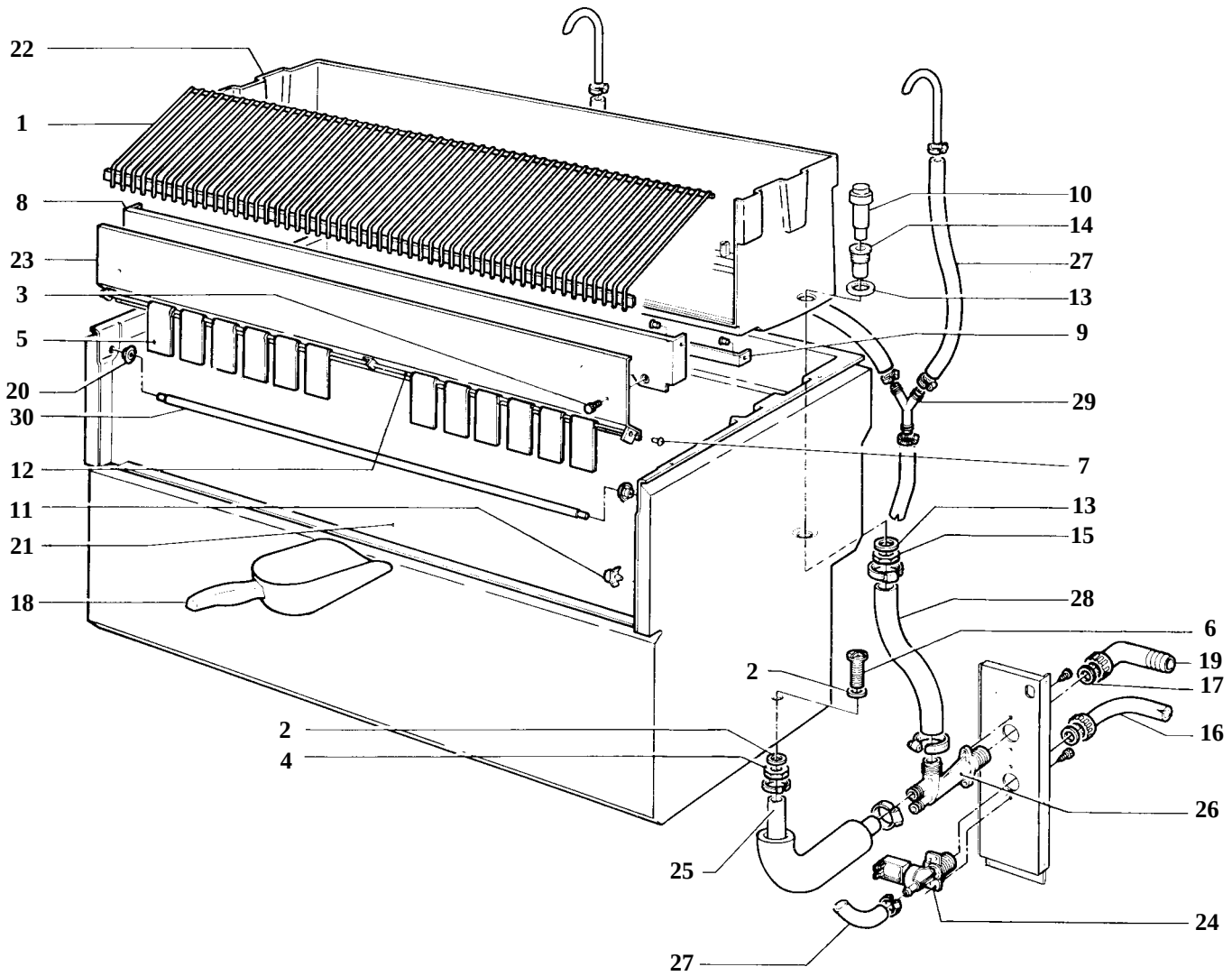

SC 120 - SM 120 - SCR 120

TAVOLA 3

ITEM NO POS. NO REP. NO REF. NO	PART NO - CODICE REFERENCE - STUECK NR **SC120**	**SM120**	**SCR120**	DESCRIPTION	DESCRIZIONE	DESIGNATION	BESCHREIBUNG
1	Z1AC008	Z1AC011	650690 02	CUBE DEFLECTOR	GRIGLIA SCORRIMENTO CUBETTI	GRILLE GLISSEMENT GLACONS	ABGLEIT GRILL
2		Z1AC013		WASHER	RONDELLA	RONDELLE	UNTERLEGSCHEIBE
3		Z1AC015		KNURLED SCREW	VITE A TESTA GODRONATA	VIS MOLETEE	SCHRAUBE
4		Z1AC016		NUT	DADO	ECROU	MUTTER
5		660629 00		SPRAY CURTAIN FLAP	BANDIERINA	LAMELLE	ABDECKKLABBE
6		Z1AC028		BIN EXAUST PIPE FITTING	RACC. SCARICO CONTENITORE	RACCORD VIDANGE CONTENEUR	ANCHLUSSTUCH BEHALTER
7		640041 29		O-RING	GUARNIZIONE	JOINT TORIQUE	SIMMER RING
8		724323 00		EVAPORATOR SUPPORT	SUPPORTO EVAPORATORE	SUPPORT EVAPORATEUR	VERDAMPFERAUFLANGE
9		722146 00		BIN SUPPORT	SUPPORTO CELLA	SUPPORT CHAMBRE	HALTERUNG INNENBEHALTER
10		660601 00		OVERFLOW STAND PIPE	TUBO DI TROPPO PIENO	TROP PLEIN	UEBERLAUFROHR
11		470019 00		SCREW	VITE	VIS	SCHRAUBE
12		734328 19		SPRAY CURTAIN BAR	TUBO OTTONE	TUBE EN LAITON	ABDECKKLAPPENHALTER
13		Z1AC056		WASHER	RONDELLA	RONDELLE	UNTERLEGSCHEIBE
14		Z1AC057		OVERFLOW STAND	RACC. SCARICO TROPPO PIENO	RACCORD ECOULEM. TROP-PLEIN	UBERLAUFROHR
15		Z1AC058		NUT	DADO	ECROU	MUTTER
16		060513 00		WATER SUPPLY PIPE	TUBO ALIMENTAZIONE ACQUA	TUYAU D'ALIMENTATION EAU	WASSERANSCHLUSSCHLAUCH
17		640076 13		GASKET	GUARNIZIONE	JOINT	DICHTUNG
18		650146 00		ICE SCOOP	SESSOLA	SASSE	EISSCHAUFEL
19		Z1AD011		ELBOW WITH RING NUT	CURVA CON GHIERA	COUDE AVEC BAGUE	KRUMMER
20	Z1AM025	Z1AM025	Z1AM025	RETAINER FOR DOOR BAR	PASSATUBO	PASSE-TUYAU	HALTERUNG
21		060524 05		KIT BIN ASSY	KIT CELLA COMPLETA	KIT CHAMBRE COMPLETE	KIT ZELLE KOMPLETT
22		Z1CE011		INTERNAL BIN	CELLA INTERNA	CHAMBRE INTERIEUR	ZELLE INTERN
23		060524 10		CURAIN FLAP ASSY	ASSIEME TENDINA	ENS. LAMELLES COMPLET	JALOUISE KOMPLETT
24	650105 54	650105 52	650105 54	WATER INLET VALVE	VALVOLA INGRESSO ACQUA	VANNE ARRIVEE EAU	ELECTROMAGNETVENTIL
25		610189 00		BIN EXAUST PIPE	TUBO SCARICO CONTENITORE	TUYAU VIDANGE CONTENEUR	BEHALTERAUSLAUFSCHLAUCH
26		Z1ID025		WATER EXAUST	SCARICO ACQUA	ECOULEMENT EAU	WASSERABLAUF
27		281900 01		PIPE	TUBO	TUBE	SCHLAUCH
28		Z1ID028		PIPE	TUBO	TUBE	SCHLAUCH
29		Z1ID031		PIPEFITTING	RACCORDO A Y	RACCORD	VERBINDUNG
30		Z1AM019		DOOR SUPPORT BAR	ASTA SPORTELLO	TIGE PORTE	KLAPPENACHSE

SC 120 - SM 120 - SCR 120

TAVOLA 4

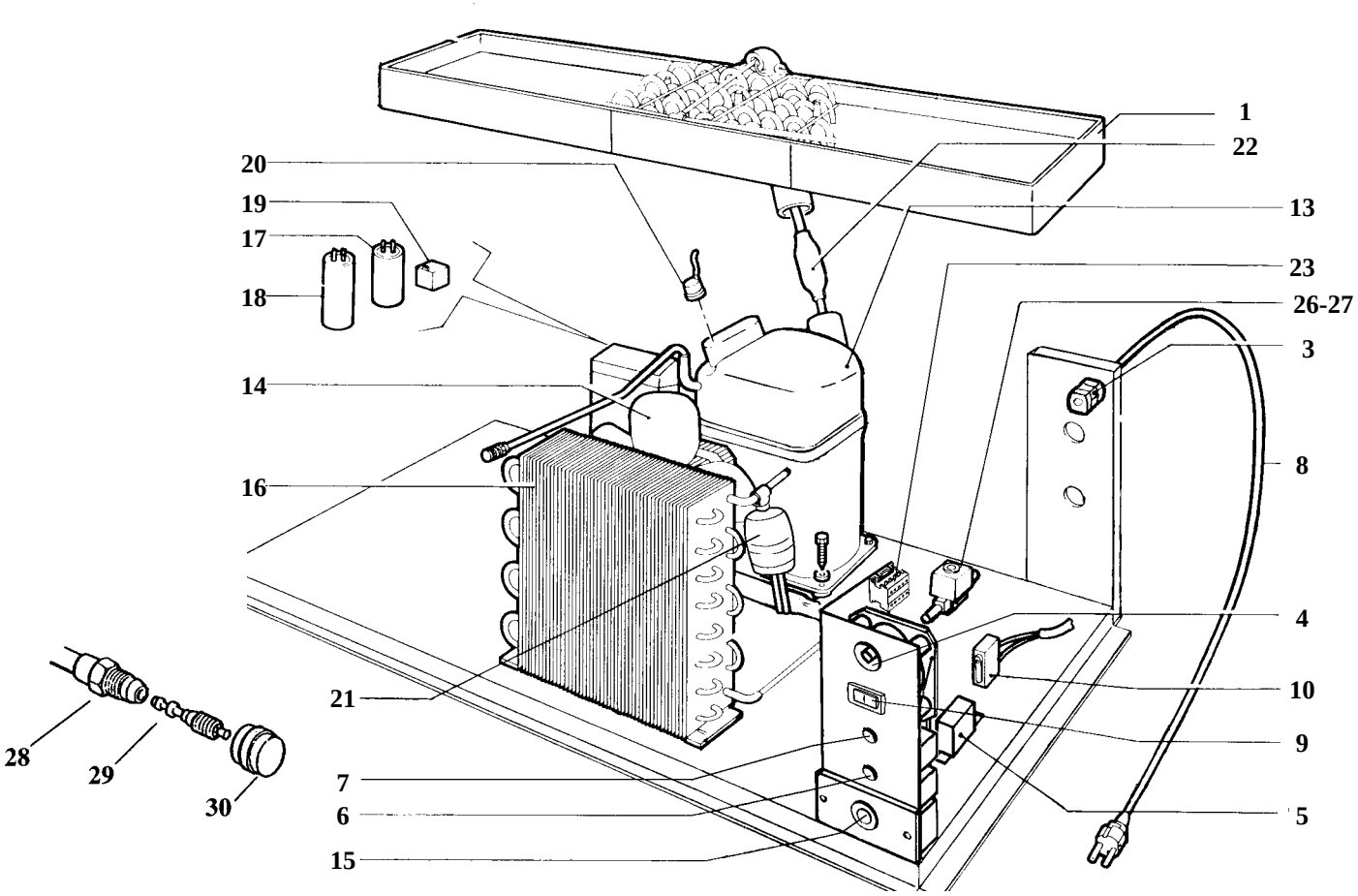

SC 120 - SM 120 - SCR 120

TAVOLA 4

ITEM NO POS. NO REP. NO REF. NO	PART NO - CODICE REFERENCE - STUECK NR **SC120**	**SM120**	**SCR120**	DESCRIPTION	DESCRIZIONE	DESIGNATION	BESCHREIBUNG
1	784506 00	784490 00	784535 00	EVAPORATOR ASSY	ASSIEME EVAPORATORE	ENS. EVAPORATEUR	VERDAMPFER KOMPLETT
3	630107 00			CABLE TERMINAL RING	FISSACAVO	SERRE-CABLE	KABELKLEMME
4	620441 00			TIMER	TIMER	MINUTERIE	TIMER
5	620075 02			PRESSURE GAUGE	PRESSOSTATO	PRESSOSTAT	DRUCHWACHTER
6	630005 00			BIN THERMOSTAT	TERMOSTATO CONTENITORE	THERMOSTAT CONTENEUR	BEHALTERTHERMOSTAT
7	620201 01			EVAPORATOR THERMOSTAT	TERMOSTATO EVAPORATORE	EVAPORATEUR THERMOSTAT	VERDAMPFERTHERMOSTAT
8	630136 00			ELECTRIC CABLE	CAVO DI ALIMENTAZIONE	CABLE D'ALIMENTATION	KABEL
9	620442 02			SWITCH	COMMUTATORE	INTERRUPTEUR	UMSHALTER
10	620453 00			MAIN SWITCH	INTERRUTTORE LUMINOSO	INTERRUPTEUR LUMINEUX	LEUCHTEND SHALTER
13	670099 04	670099 05	670099 04	COMPRESSOR	COMPRESSORE	COMPRESSEUR	KOMPRESSOR
14	620419 04 620419 34 620419 65	620419 07 620419 34 620419 65	620419 04 620419 34 620419 65	FAN MOTOR FAN BLADE FAN SUPPORT	MOTORE VENTILATORE VENTOLA STAFFA	MOTO-VENTILATEUR PALETTE SUPPORT	LUFTER FACHER HALTER
15	620231 01			PRESSURE GAUGE - SAFETY	PRESSOSTATO DI SICUREZZA	PRESSOSTAT DE SECURITE'	SICHERHCITSDRUCKWACHTER
16	620436 00	620434 00	620436 00	AIR CONDENSER	CONDENSATORE	CONDENSEUR	KONDENSATOR
17	620167 21	620167 24	620167 21	RUN CAPACITOR	CAPACITA' DI MARCIA	CAPACITE' PERMANENCE	BETREIB KONDENSATOR
18	620167 00	620167 00	620167 00	START CAPACITOR	CONDENSATORE DI SPUNTO	CAPACITE' DEMARRAGE	START KONDENSATOR
19	620057 46	620057 47	620057 46	STARTING RELAY	RELE' DI AVVIAMENTO	RELAIS DEMARRAGE	ANLAUFRELAIS
20	650058 78	650058 57	650058 78	PROTECTOR	PROTETTORE	RACCORD EVACUATION EAU	WASSERABFLUSSANSCHLUSSE
21	670006 01			DRIER	FILTRO DEUMIDIFICATORE	FILTRE	FILTER
22	784484 01			ACCUMULATOR ASSY	ASSIEME ACCUMULATRORE	ENSAMBLE ACCUMULATEUR	SAMMLER UND SUGLEITUNGEN
23	630119 00			CONTACTOR	CONTATTORE	CONTACTEUR	SHALTSCHUTZ
26-27	620306 46 620306 48	620306 46 620306 48	620306 46 620306 48	HOT GAS VALVE BODY HOT GAS VALVE COIL	CORPO VALVOLA GAS CALDO BOBINA VALVOLA GAS CALDO	CORPS DE VANNE GAZ CHAUD BOBINE DE VANNE GAZ CHAUD	HEISSGAS VENTILGEHAUSE HEISSGAS VENTILSPULE
28	650109 00			VALVE BODY	CORPO VALVOLA	CORPS DE VANNE	VENTILGEHAUSE
29	670012 00			PISTON	PISTONCINO PER VALVOLA	VALVE PISTON	VENTILKOLBEN
30	650106 00			VALVE CAP	CAPPUCCIO VALVOLA	CAPUCHON DE VANNE	VENTIL KLAPPE

SC 120 - SM 120 - SCR 120

TAVOLA 5

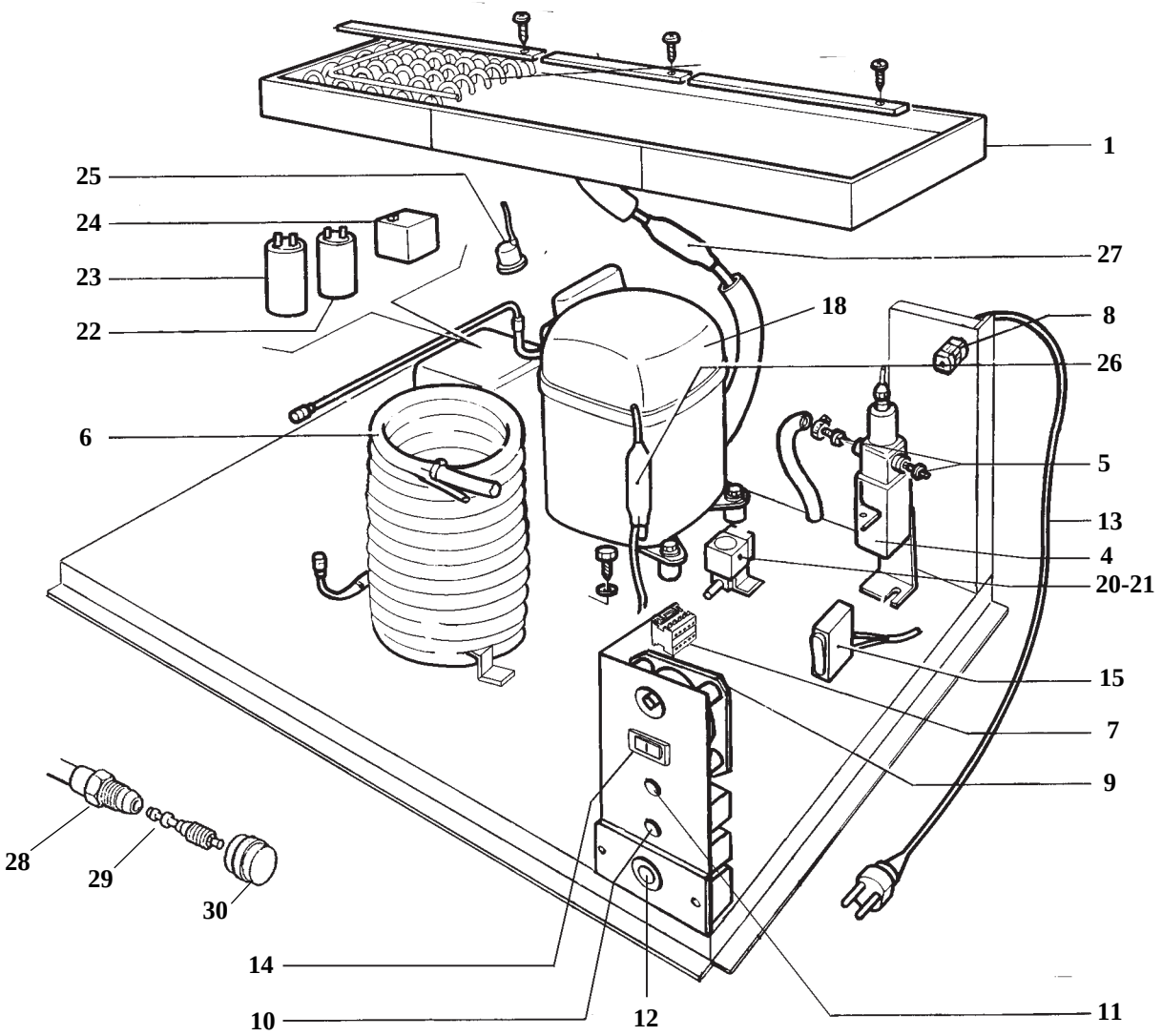

SC 120 - SM 120 - SCR 120

TAVOLA 5

ITEM NO POS. NO REP. NO REF. NO	PART NO - CODICE REFERENCE - STUECK NR **SC120**	**SM120**	**SCR120**	DESCRIPTION	DESCRIZIONE	DESIGNATION	BESCHREIBUNG
1	784506 00	784490 00	784535 00	EVAPORATOR ASSY	ASSIEME EVAPORATORE	ENS. EVAPORATEUR	VERDAMPFER KOMPLETT
4		620111 00		WATER VALVE	VALVOLA PRESSOSTATICA	VANNE PRESSOSTATIQUE	WASSERVENTIL
5		733204 00		WATER INLET FITTING	RACCORDO ENTRATA ACQUA	RACCORD ARRIVEE' D' EAU	WASSEREINLAUFSTUCK
6	620331 00	620495 00	620331 00	WATER CONDENSER	COMDENSATORE AD ACQUA	CONDENSEUR A EAU	WASSER KONDENSATOR
7		630119 00		CONTACTOR	CONTATTORE	CONTACTEUR	SHALTSCHUTZ
8		630107 00		CABLE TERMINAL RING	FISSACAVO	SERRE-CABLE	KABELKLEMME
9		620441 00		TIMER	TIMER	MINUTERIE	TIMER
10		630005 00		BIN THERMOSTAT	TERMOSTATO CONTENITORE	THERMOSTAT CONTENEUR	BEHALTERTHERMOSTAT
11		620201 01		EVAPORATOR THERMOSTAT	TERMOSTATO EVAPORATORE	EVAPORATEUR THERMOSTAT	VERDAMPFERTHERMOSTAT
12		620231 01		PRESSURE GAUGE - SAFETY	PRESSOSTATO DI SICUREZZA	PRESSOSTAT DE SECURITE'	SICHERHEITS DRUCKWACTER
13		630136 00		ELECTRIC CABLE	CAVO DI ALIMENTAZIONE	CABLE D'ALIMENTATION	KABEL
14		620442 02		SWITCH	COMMUTATORE	INTERRUPTEUR	UMSHALTER
15		620453 00		MAIN SWITCH	INTERRUTTORE LUMINOSO	INTERRUPTEUR LUMINEUX	LEUCHTEND SHALTER
18	670099 04	670099 05	670099 04	COMPRESSOR	COMPRESSORE	COMPRESSEUR	KOMPRESSOR
20-21	620306 46 620306 48	620306 46 620306 48	620306 46 620306 48	HOT GAS VALVE BODY HOT GAS VALVE COIL	CORPO VALVOLA GAS CALDO BOBINA VALVOLA GAS CALDO	CORPS DE VANNE GAZ CHAUD BOBINE DE VANNE GAZ CHAUD	HEISSGAS VENTILGEHAUSE HEISSGAS VENTILSPULE
22	620167 21	620167 24	620167 21	RUN CAPACITOR	CAPACITA' DI MARCIA	CAPACITE' PERMANENCE	BETREIB KONDENSATOR
23	620167 00	620167 00	620167 00	START CAPACITOR	CONDENSATORE DI SPUNTO	CAPACITE' DEMARRAGE	START KONDENSATOR
24	620057 46	620057 47	620057 46	STARTING RELAY	RELE' DI AVVIAMENTO	RELAIS DEMARRAGE	ANLAUFRELAIS
25	650058 78	650058 57	650058 78	PROTECTOR	PROTETTORE	RACCORD EVACUATION EAU	WASSERABFLUSSANSCHLUSSE
26		670006 01		DRIER	FILTRO DEUMIDIFICATORE	FILTRE	FILTER
27		784484 01		ACCUMULATOR ASSY	ASSIEME ACCUMULATRORE	ENSAMBLE ACCUMULATEUR	SAMMLER UND SUGLEITUNGEN
28		650109 00		VALVE BODY	CORPO VALVOLA	CORPS DE VANNE	VENTILGEHAUSE
29		670012 00		PISTON	PISTONCINO PER VALVOLA	VALVE PISTON	VENTILKOLBEN
30		650106 00		VALVE CAP	CAPPUCCIO VALVOLA	CAPUCHON DE VANNE	VENTIL KLAPPE

SC 120 - SM 120 - SCR 120

COMPRESSOR CHART, TABELLA COMPRESSORI, TABLEAU COMPRESSEUR, KOMPRESSOR KARTE

MODEL MODELLO MODELE MODELL	VOLTS TENSIONE TENSION SPANNUNG	COMPRESSOR MODEL MOD. COMPRESSORE TYPE COMPRESSEUR KOMPRESSOR TYP	COMPRESSOR COMPRESSORE COMPRESSEUR KOMPRESSOR	RELAY RELE' RELAIS RELAIS	PROTECTOR PROTETTORE PROTECTEUR SCHUTZGERAT	START CAPACITOR CAPACITA' D'AVV. CAPACITE' DE DEMARR. START KONDENSATOR	RUN CAPACITOR CONDENS. DI MARCIA CAPACITE' PERMANEN. BETREIB KONDENSAT.
SC120	115/60/1	-	-	-	-	-	-
SM120	115/60/1	-	-	-	-	-	-
SCR120	115/60/1	-	-	-	-	-	-
SC120	230/60/1	CAJ9510Z	670099 09	620057 50	620058 81	620167 00	620167 21
SM120	230/60/1	-	-	-	-	-	-
SCR120	230/60/1	-	-	-	-	-	-
SC120	230/50/1	CAJ9510Z	670099 04	620057 46	620058 78	620167 00	620167 21
SM120	230/50/1	CAJ4519Z	670099 05	620057 47	620058 57	620167 00	620167 24
SCR120	230/50/1	CAJ9510Z	670099 04	620057 46	620058 78	620167 00	620167 21

SC 120 - SM 120 - SCR 120

ELECTRIC COMPONENTS CHART, TABELLA COMPONENTI ELETTRICI, TABLEAU COMPOSANTS ELECTRIQUE, ELEKTRISCHEKARTE

MODEL MODELLO MODELE MODELL	VOLTS TENSIONE TENSION SPANNUNG	WATER PUMP POMPA POMPE A EAU WASSER PUMPE	FAN MOTOR ONLY MOTORE VENTILATORE MOTEUR VENTILATEUR LUFTER MOTOR	WATER INLET VALVE VALV. INGR. ACQUA V.E.M. ARRIVEE' EAU WASSEREIN. VENTIL	HOT GAS VALVE VALVOLA GAS CALDO V.E.M. GAZ CHAUDS HEISSGAZ VENTIL	TIMER TIMER MINUTERIE TIMER	CONTACTOR CONTATTORE CONTACTEUR SCHALTSCHUTZ
SC120	115/60/1	-	-	-	-	-	-
SM120	115/60/1	-	-	-	-	-	-
SCR120	115/60/1	-	-	-	-	-	-
SC120	230/60/1	620415 01	620419 04	650105 54	620306 46/620306 48	620441 00	630119 00
SM120	230/60/1	-	-	-	-	-	-
SCR120	230/60/1	-	-	-	-	-	-
SC120	230/50/1	620415 00	620419 04	650105 54	620306 27 / 620306 48	620441 00	630119 00
SM120	230/50/1	620415 00	620419 07	650105 52	620306 27 / 620306 48	620441 00	630119 00
SCR120	230/50/1	620415 00	620419 04	650105 54	620306 46 / 620306 48	620441 00	630119 00