SIMAG

Electronic modular cuber

SV 395

SPARE PARTS LIST
CATALOGO RICAMBI
CATALOGUE PIÈCES DÉTACHÉES
ERSATZTEILENKATALOG

090090.29 REV. 05/2010

Spare Parts Catalogue
SV 395

1 - UNIT PANELS - AIR COOLED
2 - UNIT PANELS - WATER COOLED
3 - REFRIGERANT SYSTEM AIR COOLED
4 - REFRIGERANT SYSTEM - WATER COOLED
5 - ICE MAKING SYSTEM
6 - P.C. BOARD AND SENSORS ASSY

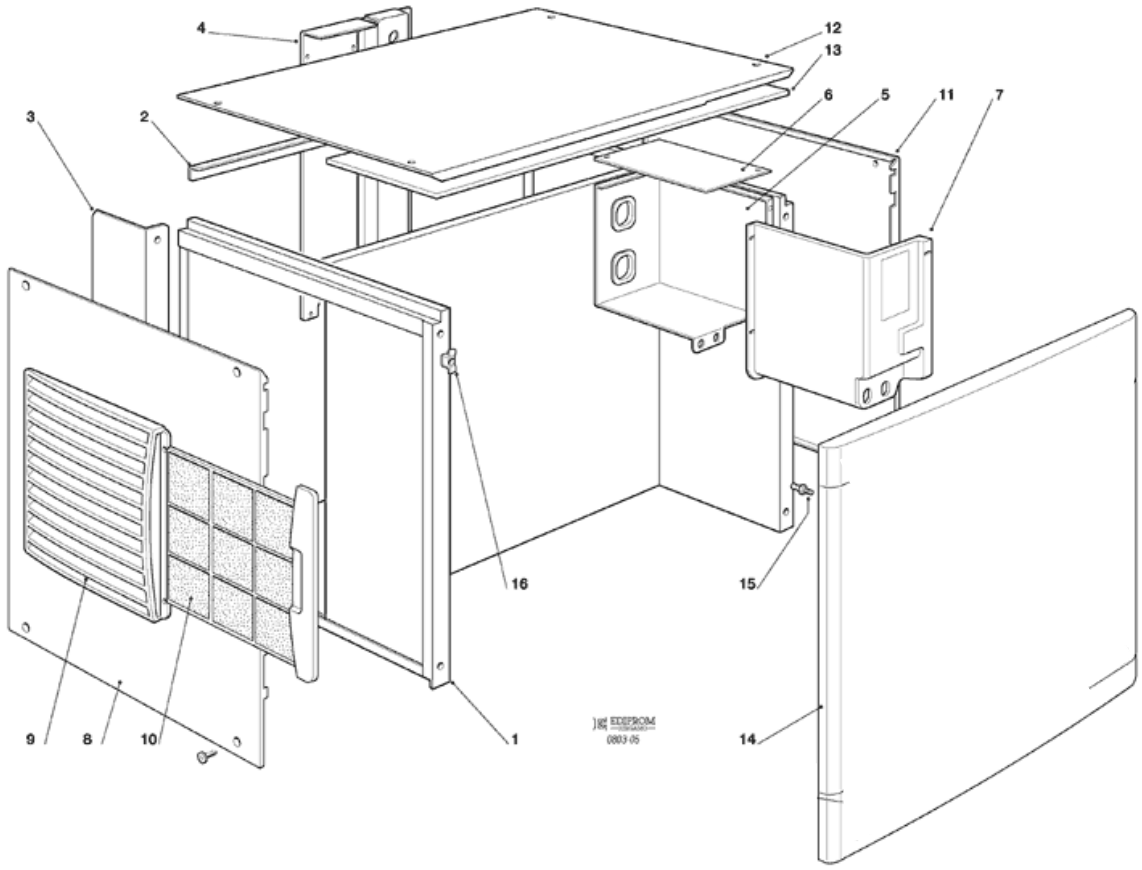
4
12
13
3
2
6
5
11
7
16
15
9
8
10
1
14
EEPROM
0803-05

1 - UNIT PANELS - AIR COOLED

POSITION	CODE	DESCRIPTION
0001	CM 81454242	UNIT FRAME
0002	CM 25753309	REAR BRACKET
0003	CM 25260482	AIR BAFFLE
0004	CM 25550888	REAR PANEL
0004	CM 25725598	METAL BRACKET
0005	CM 25690244	CONTROL BOX
0006	CM 25160713	CONTROL BOX TOP COVER
0007	CM 25160717	CONTROL BOX PLASTIC COVER
0008	CM 25330875	LEFT SIDE PANEL
0009	02004224 01	PLASTIC LOUVER PANEL
0010	02004212 01	PLASTIC FILTER
0011	CM 25330873	RIGHT SIDE PANEL
0012	CM 81455074	TOP PANEL
0013	CM 25410091	INSULATION
0014	CM 19262786	LABEL, MONITORING PANEL
0014	CM 81453978	FRONT PANEL
0015	CM 19520104	METAL PIN
0016	CM 19430104	CLIP

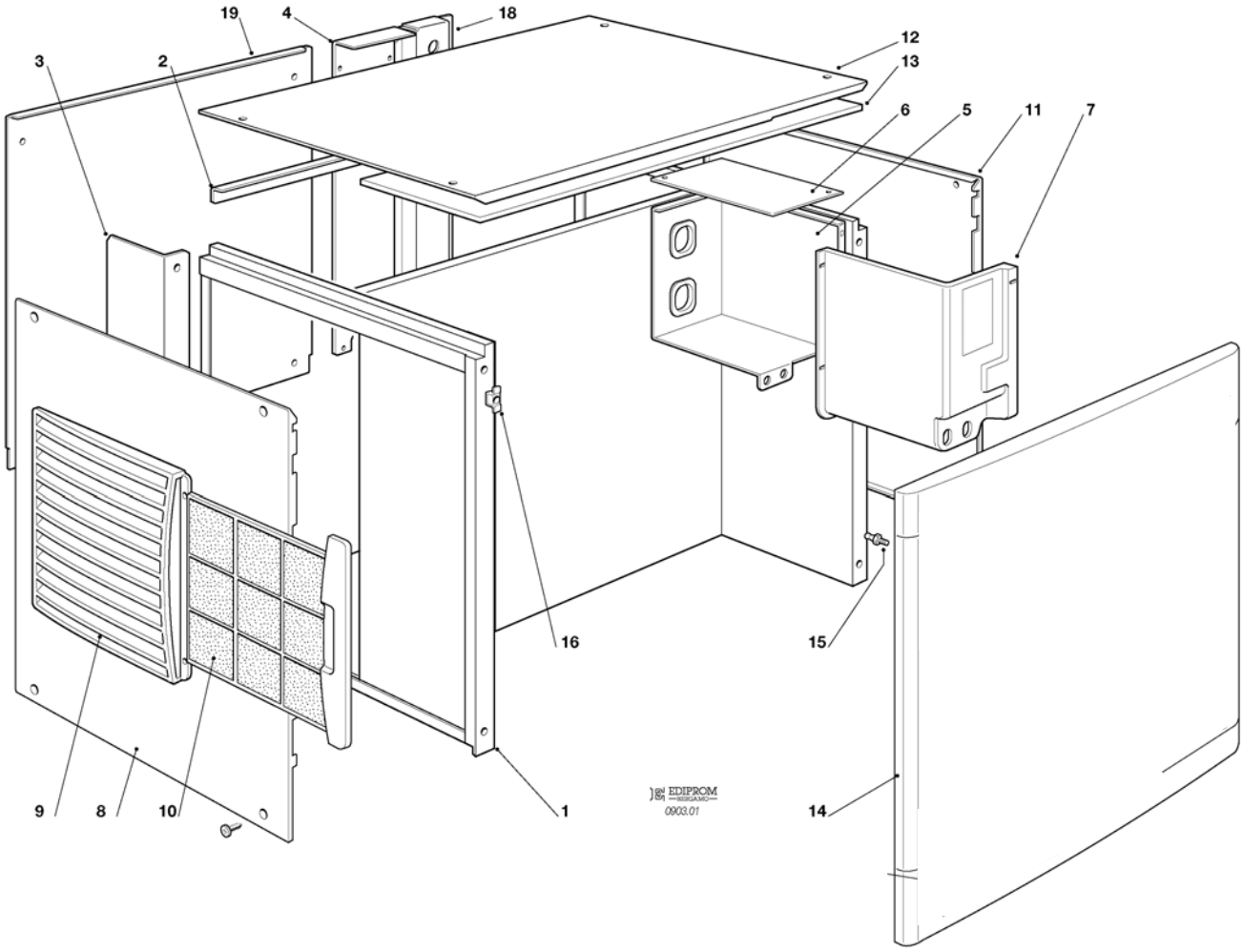
19
4
18
3
2
12
13
6
5
11
7
16
15
9
8
10
1
14
EDIPROM
0903.01

2 - UNIT PANELS - WATER COOLED

POSITION	CODE	DESCRIPTION
0001	CM 81454242	UNIT FRAME
0002	CM 25753309	REAR BRACKET
0003	CM 25260482	AIR BAFFLE
0005	CM 25690244	CONTROL BOX
0006	CM 25160713	CONTROL BOX TOP COVER
0007	CM 25160717	CONTROL BOX PLASTIC COVER
0008	CM 25330875	LEFT SIDE PANEL
0009	02004224 01	PLASTIC LOUVER PANEL
0010	02004212 01	PLASTIC FILTER
0011	CM 25330873	RIGHT SIDE PANEL
0012	CM 81455074	TOP PANEL
0013	CM 25410091	INSULATION
0014	CM 19262786	LABEL, MONITORING PANEL
0014	CM 81453978	FRONT PANEL
0015	CM 19520104	METAL PIN
0016	CM 19430104	CLIP
0018	CM 25725598	METAL BRACKET
0019	CM 25550888	REAR PANEL

3 - REFRIGERANT SYSTEM AIR COOLED

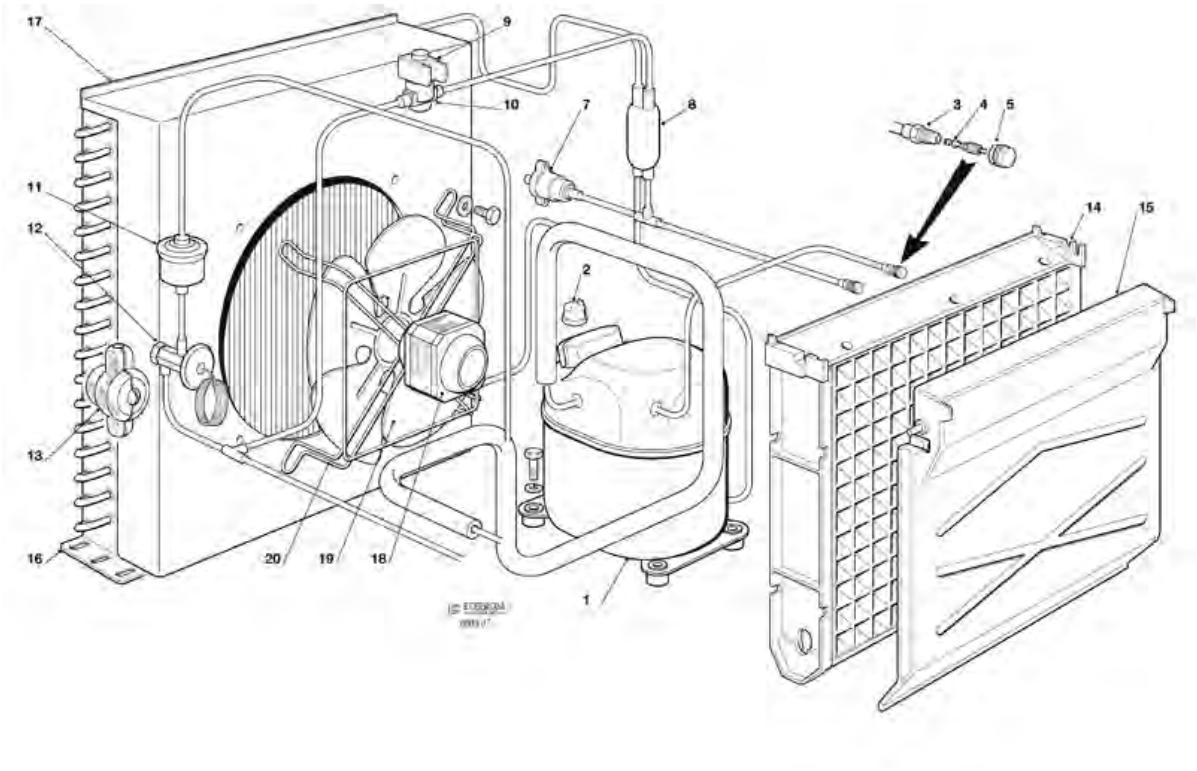

3 - REFRIGERANT SYSTEM AIR COOLED

POSITION	CODE	DESCRIPTION
0001	670099 05	COMPRESSOR - 230/50/1
0002	620058 57	PROTECTOR
0003	650109 00	VALVE BODY
0004	670012 00	VALVE CORE
0005	650106 00	CAP
0007	CM 25474402	HI PRESSURE CONTROL
0008	CM 19301268	MECHANICAL FILTER
0009	060689 00	HOT GAS VALVE COIL - 230/50-60
0009	CM 19863034	HOT GAS VALVE ASSY - 230/50-60
0010	CM 19863034	HOT GAS VALVE ASSY - 230/50-60
0011	CM 19300357	FILTER
0012	CM 19870312	TXV
0013	CM 25410096	TXV INSULATION
0014	02004156 21	EVAPORATOR UPPER PLASTIC PLATE
0014	CM 81455087	EVAPORATOR ASSY - STANDARD CUBE
0014	CM 81455088	EVAPORATOR ASSY - HALFDICE CUBE
0015	02004100 33	CURTAIN SERVICE KIT
0016	CM 19177097	CONDENSER
0017	CM 81454264	CONDENSER SHROUD
0018	CM 18562524	FAN MOTOR - 230/50-60
0019	CM 18740042	FAN BLADE
0020	CM 25726513	FAN BRACKET

4 - REFRIGERANT SYSTEM - WATER COOLED

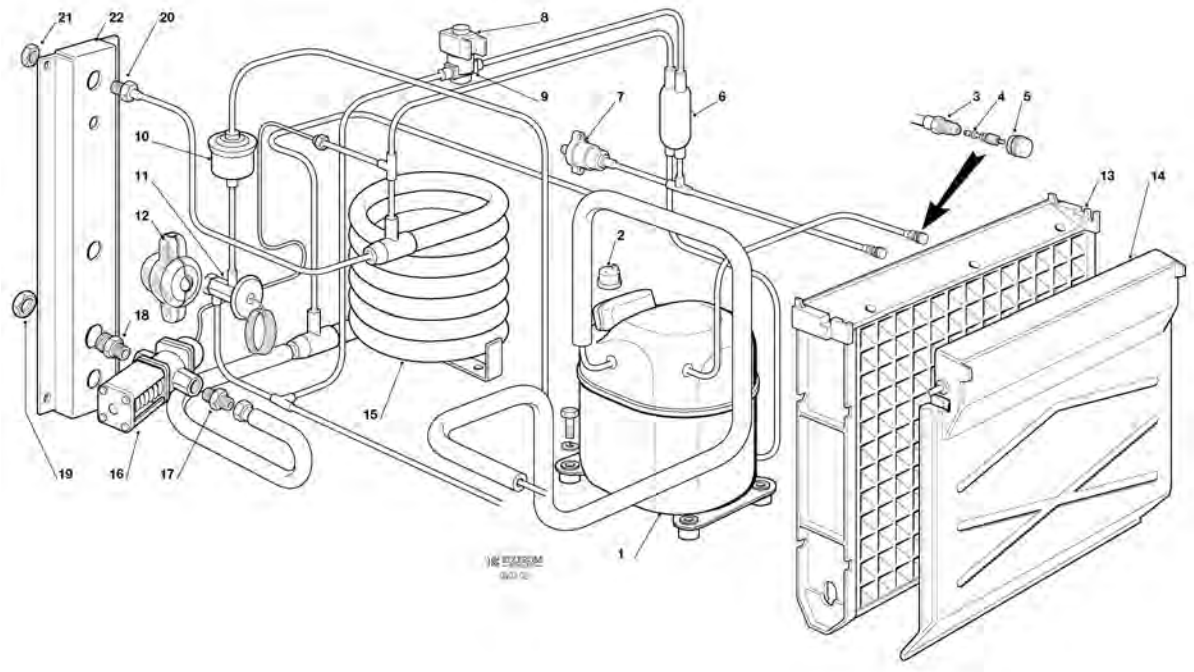

4 - REFRIGERANT SYSTEM - WATER COOLED

POSITION	CODE	DESCRIPTION
0001	670099 05	COMPRESSOR - 230/50/1
0001	CM 19166063	COMPRESSOR - 230/60/1
0002	620058 57	PROTECTOR
0003	650109 00	VALVE BODY
0004	670012 00	VALVE CORE
0005	650106 00	CAP
0006	CM 19301268	MECHANICAL FILTER
0007	CM 25474402	HI PRESSURE CONTROL
0008	060689 00	HOT GAS VALVE COIL - 230/50-60
0009	CM 19863034	HOT GAS VALVE ASSY - 230/50-60
0010	CM 19300357	FILTER
0011	CM 19870312	TXV
0012	CM 25410096	TXV INSULATION
0013	02004156 21	EVAPORATOR UPPER PLASTIC PLATE
0013	CM 81455087	EVAPORATOR ASSY - STANDARD CUBE
0013	CM 81455088	EVAPORATOR ASSY - HALFDICE CUBE
0014	02004100 33	CURTAIN SERVICE KIT
0015	CM 19177519	CONDENSER
0016	620111 00	WATER REGUL. VALVE
0017	CM 25631045	FITTING
0018	CM 25631047	FITTING
0019	CM 25250105	NUT
0020	CM 25631039	WATER FITTING-IN
0021	CM 25250105	NUT
0022	CM 25725603	METAL BRACKET

5 - ICE MAKING SYSTEM

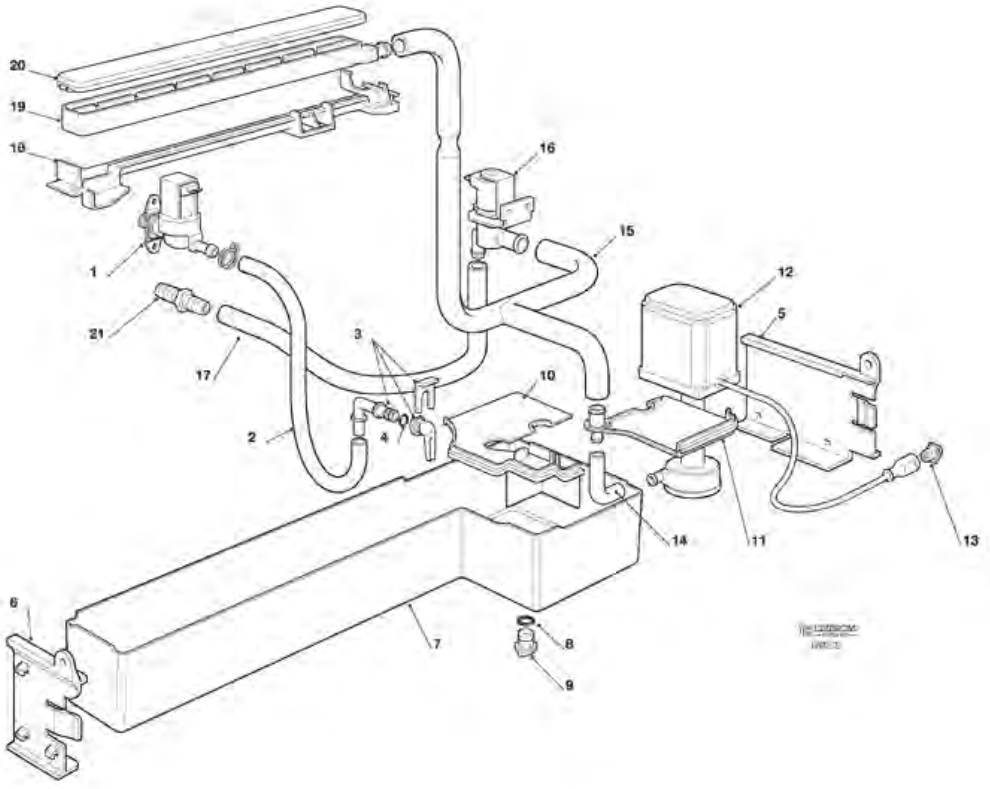

5 - ICE MAKING SYSTEM

POSITION	CODE	DESCRIPTION
0001	650105 54	INLET VALVE - 230/50 - 60
0002	CM 25791963	PLASTIC HOSE
0003	793172 00R	WATER INLET ELBOW ASSY
0004	640041 31	O RING
0005	CM 25725589	RIGHT PLASTIC BRACKET
0006	CM 25725590	LEFT PLASTIC BRACKET
0007	CM 25820130	WATER RESERVOIR
0008	CM 41020448	GASKET
0009	CM 25730503	DRAIN PLUG
0010	CM 25160715	LEFT PLASTIC COVER
0011	CM 81454261	FRONT PLASTIC COVER
0012	CM 81454131	WATER PUMP ASSY
0013	CM 81453915	POWER SOCKET
0014	CM 25790071	PLASTIC HOSE
0015	CM 25790073	PLASTIC HOSE
0016	CM 19865540	WATER PURGE VALVE
0017	CM 25790072	PLASTIC HOSE
0018	02004205 02	WATER PAN PLASTIC BRACKET
0019	02004064 02	WATER PAN
0020	02004065 01	WATER PAN COVER
0021	CM 25690807	DRAIN FITTING, WATER

- P.C. BOARD AND SENSORS ASSY -

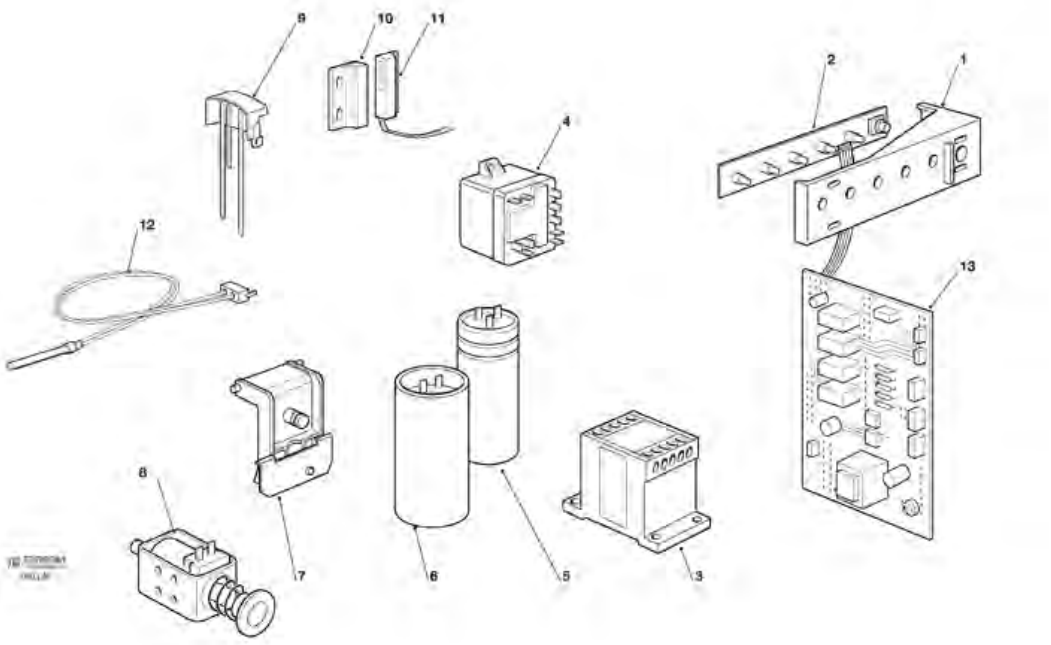

- P.C. BOARD AND SENSORS ASSY -

POSITION	CODE	DESCRIPTION
0001	CM 81453668	LED HOLDER
0002	CM 33580151	MONITOR PANEL
0003	CM 33730712	CONTACTOR
0004	620057 47	RELAY - 230/50
0005	620167 54	CAPACITOR - 35 MFD/450V
0006	620167 00	START CAPACITOR 88-108MFD/330V
0007	CM 81455094	ICE THICKNESS SENSOR
0008	CM 19270502	HARVEST ASSIST SOLENOID
0009	0A039030 21	WATER LEVEL SENSOR
0009	CM 81455102	WATER LEVEL SENSOR HARNESS
0010	11000563 02	MAGNET
0011	11000563 06	MAGNET SWITCH
0012	CM 33580101	CONDENSER SENSOR
0013	CM 33580250	CONTROLLER



Via Pascoli, 22 - 20010 Pogliano Milanese (Milano) Italy
Tel. +39 02 93900215 (Commerciale - Sales Dept.)
Tel. +39 02 93960357 (Assistenza - Service Dept.)
Fax +39 02 93900226 (Commerciale - Sales Dept.)
Fax +39 02 93960366 (Assistenza - Service Dept.)
E-mail: sales@simag.it • service@simag.it
www.simag.it