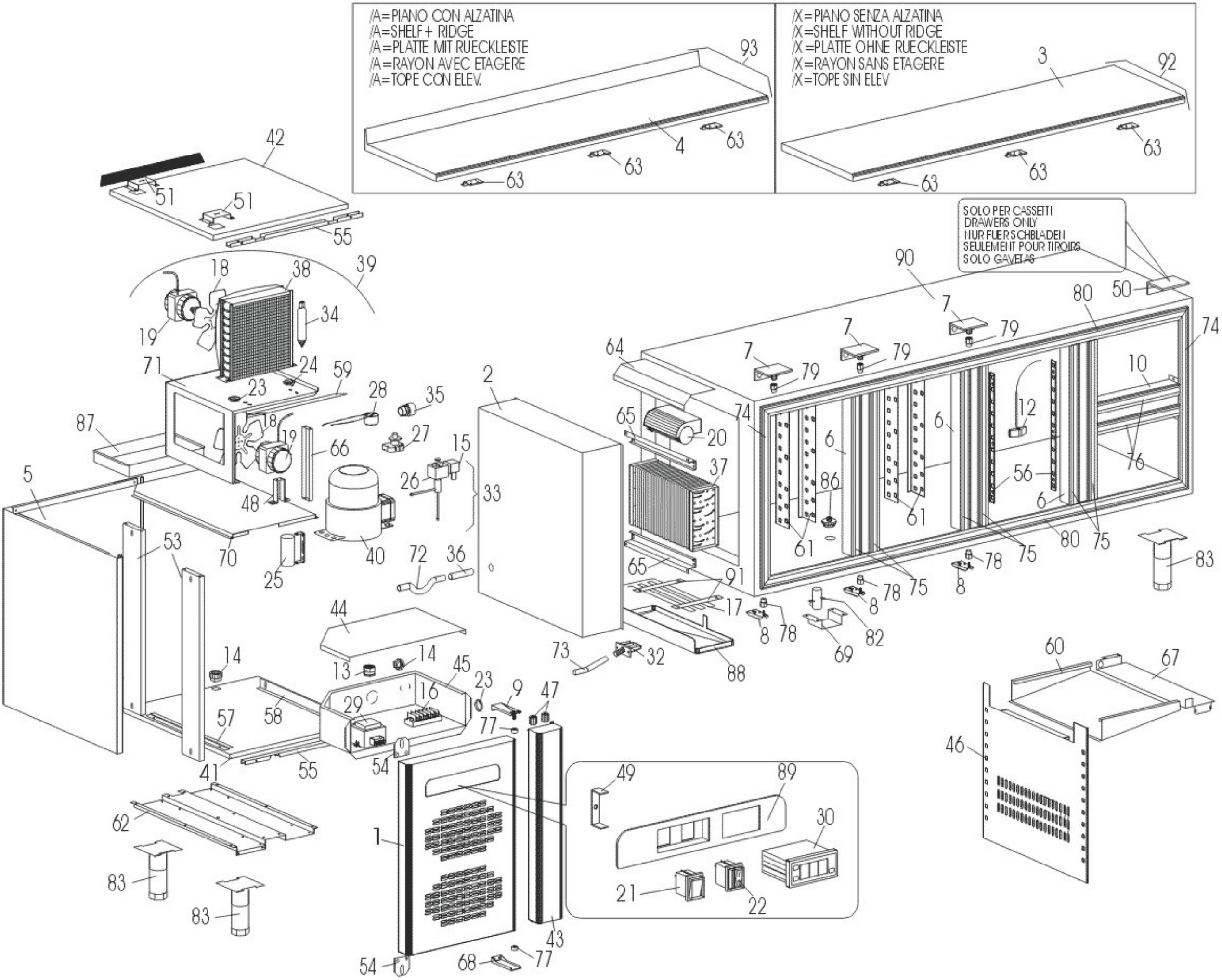
/A=PIANO CON ALZATINA
/A=SHELF + RIDGE
/A=PLATTE MIT RUECKLEISTE
/A=RAYON AVEC ETAGERE
/A=TOPE CON ELEV.
/X=PIANO SENZA ALZATINA
/X=SHELF WITHOUT RIDGE
/X=PLATTE OHNE RUECKLEISTE
/X=RAYON SANS ETAGERE
/X=TOPE SIN ELEV
SOLO PER CASSETTI
DRAWERS ONLY
NUR FUER SCHBLADEN
SEULEMENT POUR TIROIRS
SOLO GAVETAS

# Modello Typ Model Modele Modelo

| | | TE1A<br>TE1A/X<br>TE1A/A | TE1A/2<br>TE1A/2X<br>TE1A/2A | TE1A/11<br>TE1A/11X<br>TE1A/11A | TE1A/3<br>TE1A/3X<br>TE1A/3A | TE1B<br>TE1B/X<br>TE1B/A | TE1B/2<br>TE1B/2X<br>TE1B/2A | TE1B/4<br>TE1B/4X<br>TE1B/4A | TE1B/11<br>TE1B/11X<br>TE1B/11A | TE1B/22<br>TE1B/22X<br>TE1B/22A | TE1B/3<br>TE1B/3X<br>TE1B/3A |
|---|---|---|---|---|---|---|---|---|---|---|---|
| Num. Cassetti<br>Schublad<br>Drawers<br>Tiroirs<br>Gabetas | 1/2 | --- | 2 | --- | --- | --- | 2 | 4 | --- | --- | --- |
| | 1/3 | --- | --- | 1 | 3 | --- | --- | --- | 1 | 2 | 3 |
| | 2/3 | --- | --- | 1 | --- | --- | --- | --- | 1 | 2 | --- |

| | | TE1C<br>TE1C/X<br>TE1C/A | TE1C/2<br>TE1C/2X<br>TE1C/2A | TE1C/4<br>TE1C/4X<br>TE1C/4A | TE1C/6<br>TE1C/6X<br>TE1C/6A | TE1C/11<br>TE1C/11X<br>TE1C/11A | TE1C/22<br>TE1C/22X<br>TE1C/22A | TE1C/33<br>TE1C/33X<br>TE1C/33A | TE1C/3<br>TE1C/3X<br>TE1C/3A |
|---|---|---|---|---|---|---|---|---|---|
| Num. Cassetti<br>Schublad<br>Drawers<br>Tiroirs<br>Gabetas | 1/2 | --- | 2 | 4 | 6 | --- | --- | --- | --- |
| | 1/3 | --- | --- | --- | --- | 1 | 2 | 3 | 3 |
| | 2/3 | --- | --- | --- | --- | 1 | 2 | 3 | --- |

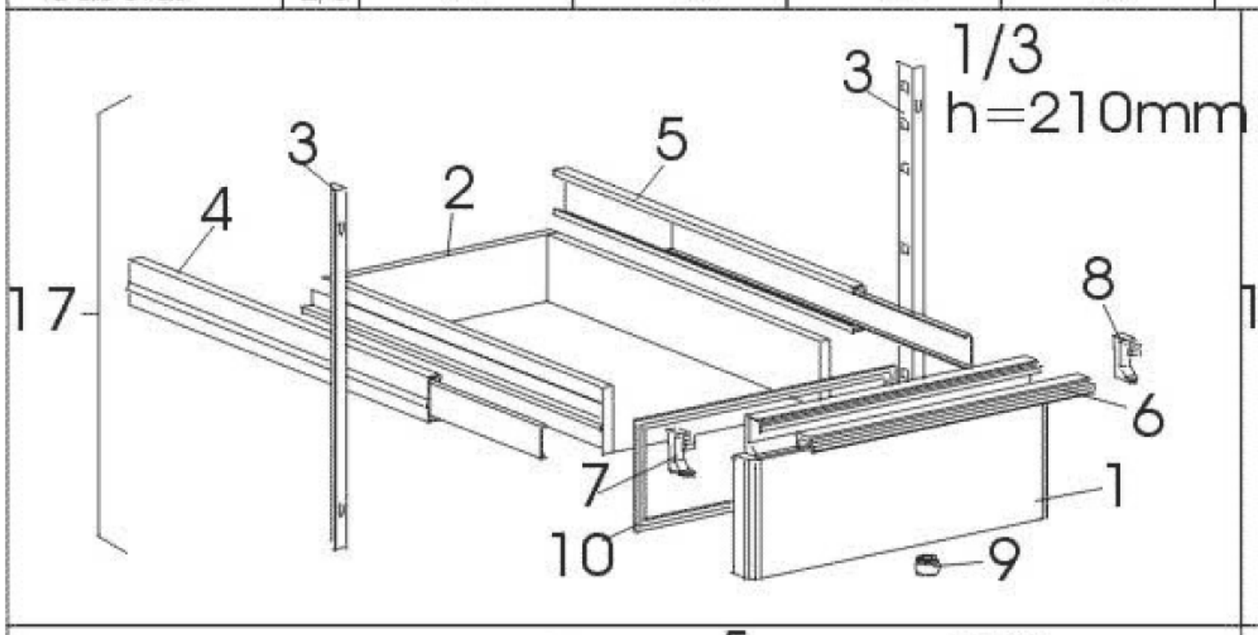


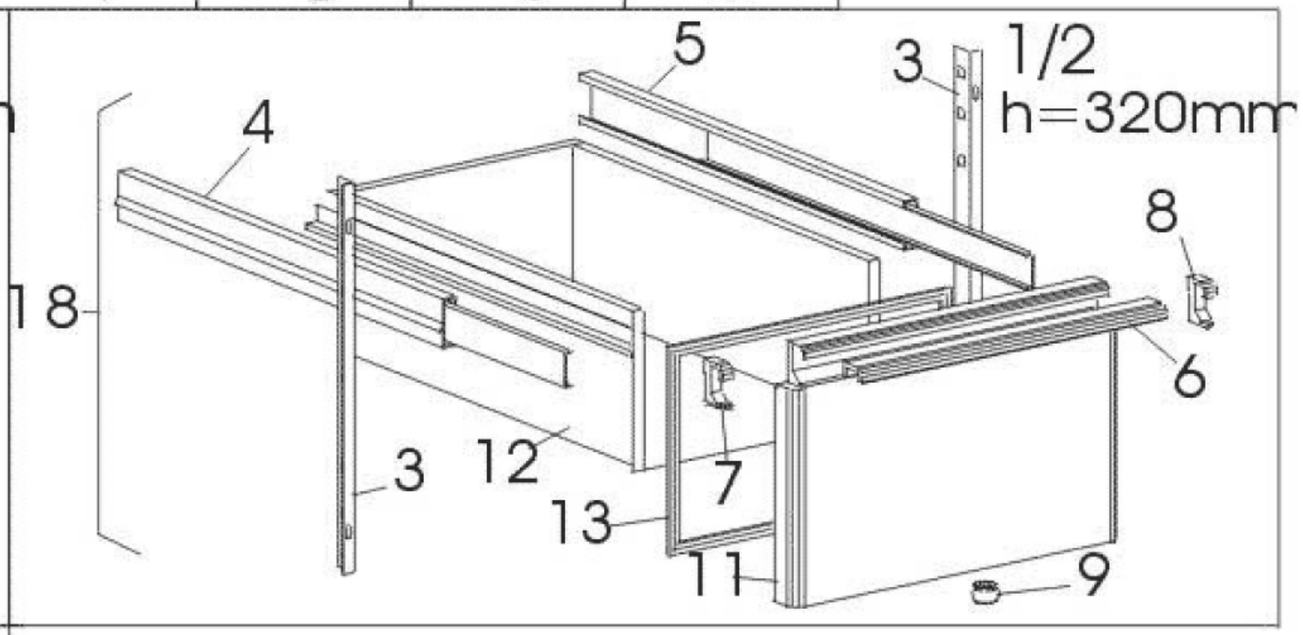


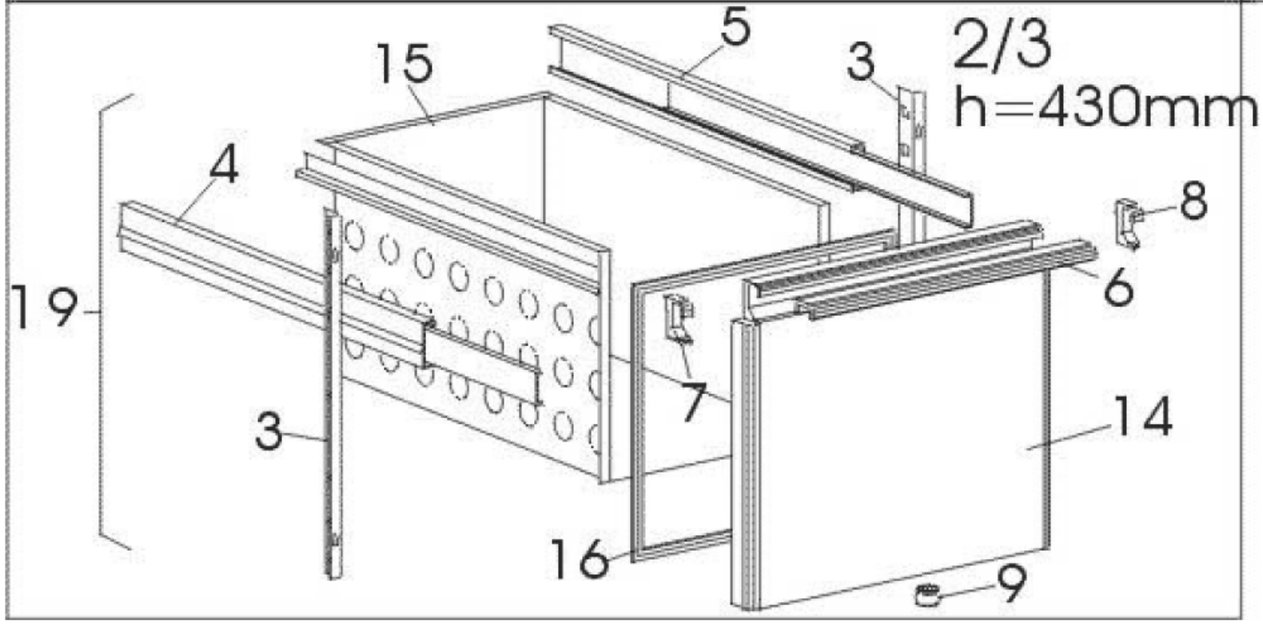

# Modello Typ Model Modele Modelo

| | | | | | | | | | | |
|---|---|---|---|---|---|---|---|---|---|---|
| | | TE1A<br>TE1A/X<br>TE1A/A | TE1A/2<br>TE1A/2X<br>TE1A/2A | TE1A/11<br>TE1A/11X<br>TE1A/11A | TE1A/3<br>TE1A/3X<br>TE1A/3A | TE1B<br>TE1B/X<br>TE1B/A | TE1B/2<br>TE1B/2X<br>TE1B/2A | TE1B/4<br>TE1B/4X<br>TE1B/4A | TE1B/11<br>TE1B/11X<br>TE1B/11A | TE1B/22<br>TE1B/22X<br>TE1B/22A |
| Porte<br>Ture<br>Doors<br>Portes<br>Portas<br>Gabetas | SX<br><br><br><br><br>DX | 1<br><br><br><br><br>1 | 1<br><br><br><br><br>--- | 1<br><br><br><br><br>--- | 1<br><br><br><br><br>--- | 2<br><br><br><br><br>1 | 2<br><br><br><br><br>--- | 1<br><br><br><br><br>--- | 2<br><br><br><br><br>--- | 1<br><br><br><br><br>--- |
| | | TE1B/3<br>TE1B/3X<br>TE1B/3A | TE1C<br>TE1C/X<br>TE1C/A | TE1C/2<br>TE1C/2X<br>TE1C/2A | TE1C/4<br>TE1C/4X<br>TE1C/4A | TE1C/6<br>TE1C/6X<br>TE1C/6A | TE1C/11<br>TE1C/11X<br>TE1C/11A | TE1C/22<br>TE1C/22X<br>TE1C/22A | TE1C/33<br>TE1C/33X<br>TE1C/33A | TE1C/3<br>TE1C/3X<br>TE1C/3A |
| Porte<br>Ture<br>Doors<br>Portes<br>Portas<br>Gabetas | SX<br><br><br><br><br>DX | 2<br><br><br><br><br>--- | 3<br><br><br><br><br>1 | 3<br><br><br><br><br>--- | 2<br><br><br><br><br>--- | 1<br><br><br><br><br>--- | 3<br><br><br><br><br>--- | 2<br><br><br><br><br>--- | 1<br><br><br><br><br>--- | 3<br><br><br><br><br>--- |

