F A G O R

SPARE PARTS CATALOGUE
ERSATZTEILKATALOG
CATALOGUE PIECES DETACHEES
CATALOGO PARTI RICAMBIO
CATALOGO DE PIEZAS DE RECAMBIO
CATALOGO PECAS DE REPOSICAO

LP 60

10-02-2012

LP 60

Tav.1: Carrozzeria
Tav.2: Impianto elettrico
Tav.3: Componenti in vasca
Tav.4: Circuito di lavaggio
Tav.5: Circuito di risciacquo
Tav.6: Lance di lavaggio
Tav.7: Pompa di lavaggio

Tav.1: Machine body
Tav.2: Electrical components
Tav.3: Components in the tank
Tav.4: Washing circuit
Tav.5: Rinsing circuit
Tav.6: Washing arms
Tav.7: Washing pump

Tab.1: Carrocería
Tab.2: Instalación eléctrica
Tab.3: Componentes en cuba
Tab.4: Circuito de lavado
Tab.5: Circuito d'enjuague
Tab.6: Brazos de lavado
Tab.7: Bomba de lavado

Tab.1: Carrosserie
Tab.2: Installation électrique
Tab.3: Composants de cuve
Tab.4: Circuit de lavage
Tab.5: Circuit de rinçage
Tab.6: Bras de lavage
Tab.7: Pompe de lavage

Taf.1: Verkleidung
Taf.2: Elektrische Anlage
Taf.3: Bauteile im Waschtank
Taf.4: Spuelschaltung
Taf.5: Nachspuelschaltung
Taf.6: Wascharme
Taf.7: Spuelpumpe

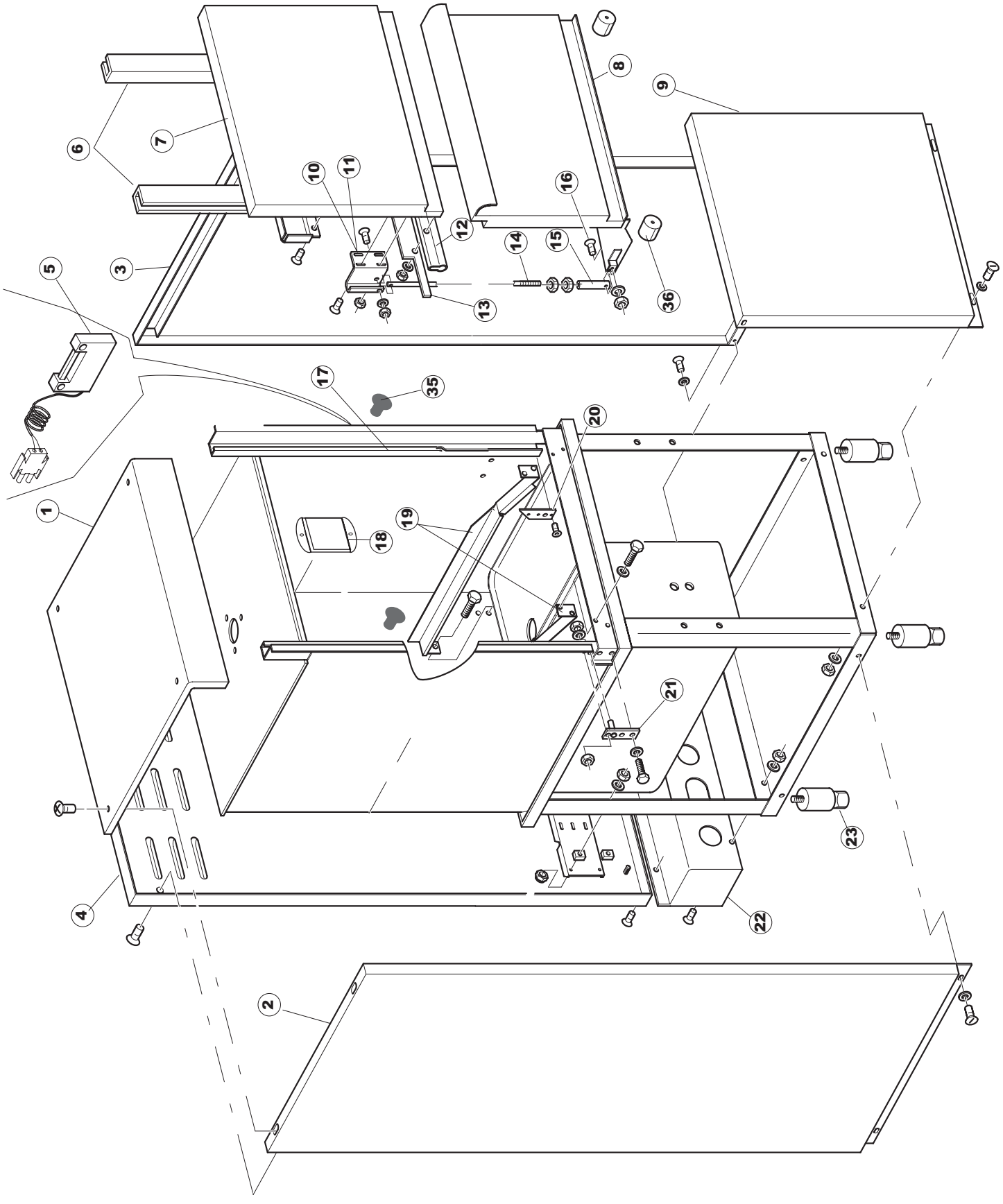
1
2
3
4
5
6
7
8
9
10
11
12
13
14
15
16
17
18
19
20
21
22
23
35
36

Listino componenti per pagina 1

1	EU41118	PANN.SUPER.U61/61H PANEL, UPPER U61/61H OB. PLATTE U61/61H PANN.SUPER.U61/61H PANEL SUPER. U61/61H	
2	EU41810	PANNELLO LATERALE SINISTRO SIDE PANEL- LEFT - ASSY FOR POT AND PAN WASHER SEITLICHES PANEEL - LINKS - KOMPLETT FUER KOCHTOEPFS PANNEAU LATERAL GAUCHE, COMPLET POUR LAVE-CASSER(PANEL LATERAL IZDA. COMPL. U61	
3	EU41814	PANNELLO LATERALE DESTRO SIDE PANEL - RIGHT - FOR POT AND PAN WAS HER, ASSY SEITLICH PANEEL - RECHTS - FUER KOCHTOEP FESPUELER, I PANNEAU LATERAL DROIT, COMPLET - POUR LA VE-CASSERC PANEL LATERAL DCHA. COMPL. 610	
4	EU41122	PANNELLO RETRO U61 PANEL, REAR U61 PLATTE, HINTEN U61 PANNELLO ARRIERE U61 PANEL TRASERO U61	
5	EU80871	MICRO MAGNETICO MAGNETIC DOOR SWITCH TUERKONTAKTSCHALTER CONTACTE MAGNETIQUE CONTACTO MAGNETICO	
6	EU41038	GUIDA SCORR.SPORTELLO SUP.U61/61H GUIDE, UPP.DOOR SLIDING U61/61H SCHIEBER, OB.TÜR U61/61H GUIDE GLISSEM.VOLET SUP.U61/61H GUIA CORRED. PUERTA SOP. U61/61H	
7	EU41580	PORTA SUPERIORE UPPER DOOR, ASSY FOR POT AND PAN WASHERS TUER - OBEN - KOMPLETT - FUER KOCHTOEPFE SPUELER PORTE SUPERIEURE COMPLETE POUR LAVE-CASS EROLES PUERTA SUP.COMPL.U61/61H	
8	EU41570	PORTA INFERIORE LOWER DOOR, ASSY - FOR POT AND PAN WASH ERSù TUER - OBEN - KOMPLETT FUER KOCHTOEPFESP UELER PORTE INFERIEURE COMPLETE POUR LAVE-CASS EROLES PUERTA INFER COMPLETA LP101 NT	
9	EU41124	PANNELLO ANTERIORE LP101-105 COMPLETO PANNELLO ANTERIORE LP101-105 COMPLETO PANEL DELANT. LP101-105 COMPLETO.	
10	EU4108701	SQUADRA DESTRA AGGANCIO TIRANTE SPORTELLO SUPERIC RIGHT BRACKET FOR UPPER DOOR TIE ROD FASTENING RECHT-HATER FUER ANKUPPELN DER OBEREN TUER-STANG EQUERRE DROITE ACCROCHAGE TIRANT PORTE SUPERIEUR ESCUAD DCHA. FIJA TIR PUERTA SUP. LP PG ACAB.	
11	EU4108801	SQUADRETTA SINISTRA AGGANCIO TIRANTE SPORTELLO SUF LEFT BRACKET FOR UPPER DOOR TIE ROD CONNECTION FOF LINK-HALTER FUER ANKUPPELN OBEREN TUERSTANGE FUER EQUERRE DROITE ACCROCHAGE TIRANTE PORTE SUPERIEUI ESCUAD IZQDA. FIJ TIR PUERTA SUP. LP PG ACAB.	
12	EU41583	GUARNIZIONE PORTA	
13	EU41582	STAFFA GUARNIZIONE PORTA DOOR PACKING SUPPORT - UPPER - FOR POT A ND PAN WASI HALTERUNG FUER TUERPACKUNG - OBEN FUER K OCHTOEPF SUPPORT JOINT PORTE SUPERIEURE POUR LAVE -CASSEROI SOPORTE JUNTA PUERTA SOP. U61. .	
14	EU4109301	TIRANTE SPORTELLO 610 TIE-ROD, DOOR 610 ZUGSTAB, TÜR 610 TIRANT VOLET 610 TIRANTE PUERTA 610	
15	EU41095	BUSSOLA TIRANTE PORTA 610/610H BUSHING, DOOR TIE-ROD 610/610H BUCHSE, TÜRZUGSTAB 610/610H DOUILLE TIRANT PORTE 610/610H CASQUILLO TIRANTE PUERTA 610/610H	

16	EU486078	VITE TC-CE M6X40 INOX SCREW TC-CE M6X40 INOX SCHRAUBE TC-CE M6X40 INOX VIS TC-CE M6X40 INOX TORNILLO TC-CE M6X40 INOX	
17	EU929199	PIEDINO BATTUTA TIPO 30191.1.2(NERO) FOOT, BUFFER TYPE 30191.1.2 (NOIR) STÜTZFUSS, ANSCHLAG TYP 30191.1.2 (SCHWARZ) PIED FEUILL. TYPE 30191.1.2(NOIR) PATA TOPE TIPO 30191. 1. 2(NEGRO)	
18	EU43527	PROTEZIONE GUARD SCHUTZVERKLEIDUNG PROTECTION SOPORTE DE PROTECCION	
19	EU41539	GUIDA CESTO RACK GUIDE KORBFUEHRUNG COULISSE PANIER GUIA CESTA	
20	EU4113501	SPESSORE LAT.SPORTELLO SIDE THICKNESS FOR DOOR SEITL. EINLEGERING FÜR TÜR EPAISSEUR LAT. VOLET GROSOR LAT. PUERTA	
21	EU4114501	PIASTRINA PERNO SPORTELLO U61.. PLATE, DOOR PIN U61.. PLATTE, TÜRANGEL U61.. PLAQUE PIVOT VOLET U61.. PLANCHITA PERNO PUERTA U61. .	
22	EU41622	PANNELLO RETRO INFERIORE REAR PANEL RUECKWANDVERKLEIDUNG PANNEAU ARRIERE PANEL PARTE POSTERIOR INFERIOR	
23	EU927006	PIEDE REGOLABILE X TRAINO FOOT, ADJUST. FOR TACK CONVEYOR VERSTELLFUSS FÜR KORBTR. PIED REGLABLE POUR AVANC. PATA REGULABLE X ACCION.	
35	EU929199	PIEDINO BATTUTA TIPO 30191.1.2(NERO) FOOT, BUFFER TYPE 30191.1.2 (NOIR) STÜTZFUSS, ANSCHLAG TYP 30191.1.2 (SCHWARZ) PIED FEUILL. TYPE 30191.1.2(NOIR) PATA TOPE TIPO 30191. 1. 2(NEGRO)	
36	EU41100	TAMPONE BATTUTA SPORTELLO LP DOOR BUFFER LP PUFFER, TÜRANSCHLAG LP TAMPON FEUILLURE VOLET LP TAMPON TOPE PUERTA LP	

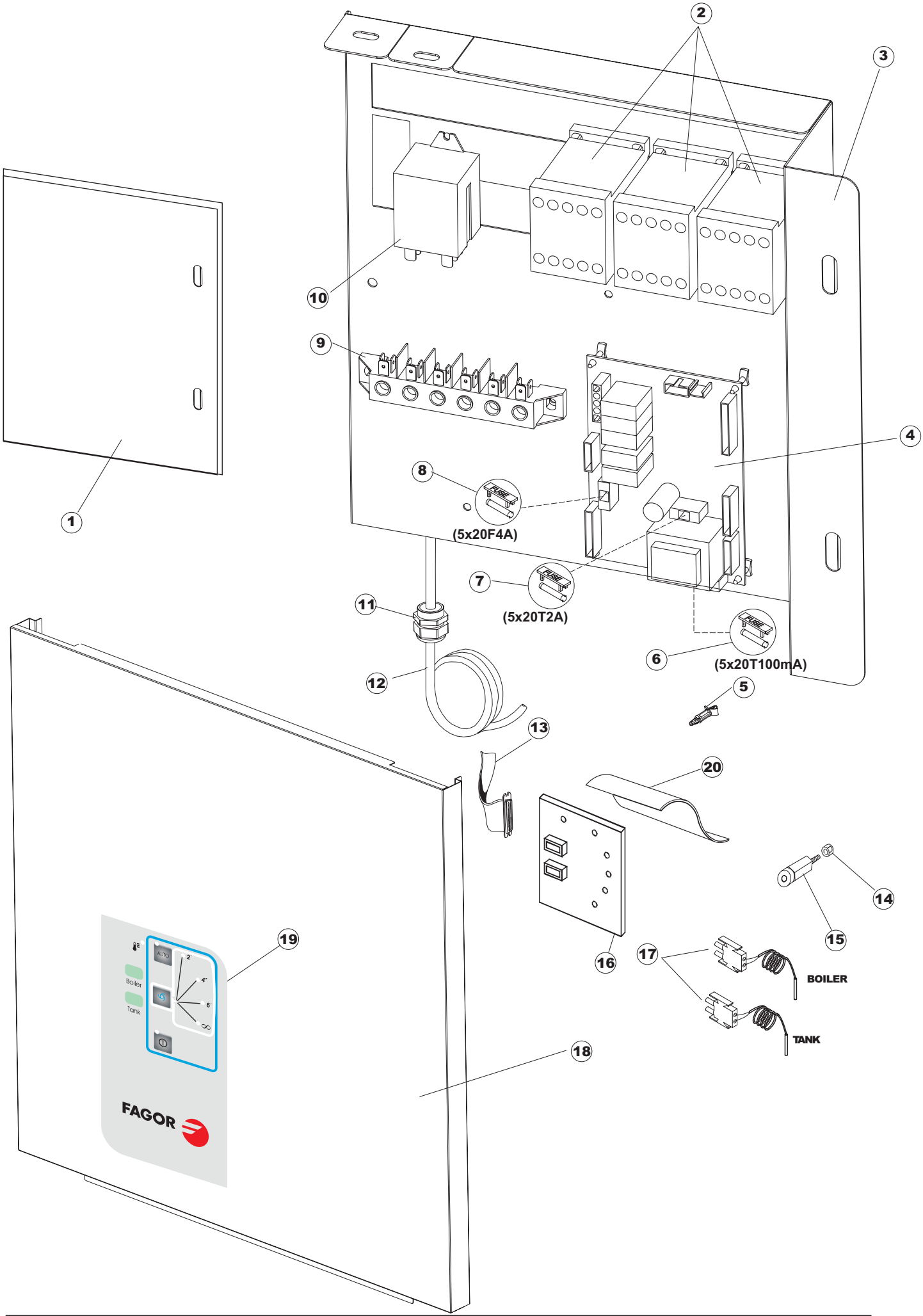
1
2
3
4
5
6
(5x20T100mA)
7
(5x20T2A)
8
(5x20F4A)
9
10
11
12
13
14
15
16
17
BOILER
TANK
18
19
20
FAGOR
Boiler
Tank
AUTO

Listino componenti per pagina 2

1	EU41416	COPERCHIO COVER DECKEL COUVERCLE TAPA PANEL	
2	EU73350	CONTATTORE 230/50-60HZ CONTACTOR 230-50/60HZ KONTAKT-GEBER 230-50/60HZ CONTACTEUR 230-50/60HZ CONTACTOR	
3	EU41415	PANNELLO PANEL PANEEL PANNEAU PANEL PORTACOMPONENTES	
4	EU215032-1	SCHEDA MAIN BOARD KARTE CARTE ELECTRONIQUE TARJETA GET50	
5	EUCWP2	PIEDINI SUPPORTO SCHEDA ELET.(ART.DRA6A) FEET, ELECTR.CARD SUPPORT(ART.DRA6A) STÜTZFÜSSE FÜR PLATINE (ART.DRA6A) PIEDS SUPPORT FICHE ELECTR.(ART.DRA6A) PATAS SOPORTE TARJETA ELECT. (ART.DRA6A)	
6	EU228012	FUSIBILE 5X20 T160MA FUSE 5X20 T160MA SICHERUNG FUSIBLE FUSIBLE 5X20 T160MA	
7	EU228011	FUSIBILE 5X20 T2A FUSE 5X20 T2A SICHERUNG 5X20 TA2 FUSIBLE FUSIBLE 5X20 T2A	
8	EU228004	FUSIBILE 5X20F 4A FAST FUSE, 5X20 4A FAST SICHERUNG, 5X20 4A FAST FUSIBLE 5X20 4A FAST FUSIBLE 5X20 4A FAST	
9	EU220011	* MORSETTIERA 5.POLI + TERRA FV.122 * TERMINAL BOARD, 5-POLES + EARTH FV.122 * KLEMMENBRETT, 5-POLIG + ERDUNG FV.122 * PLAQUE A BORNE 5POLES + TERRE FV.122 * BORNERO 5. POLOS + TIERRA FV. 122	
10	EU929115	RELE 16A 230V 62.82 RELAY 16A 230V 62.82 RELAIS 16A 230V 62.82 RELAIS 16A 230V 62.82 RELE 16A 230V 62. 82	
11	EUDEP521	PRESSACAVO PG21 (BER 4721) CABLE GLAND PG21 (BER 4721) KABELSCHELLE PG21 (BER 4721) SERRE CABLE PG21 (BER 4721) SUJETA-CABLE PG21 (BER 4721)	
12	EU80997	CAVO ALIMENTAZIONE MAIN CABLE ANSCHLUSSKABEL 400V CÂBLE ÉLECTRIQUE CABLE ALIMENTACION 5X2,5MM (H07RN-F)	
13	EU80933	CAVO FLAT COMANDI SUPERIORI CAPOT CABLE FLAT CAPOT FLACHKABEL TRISSE LIAISON CABLE FLAT MANDOS SUPERIORES CAPOT	
14	EU417119	DADO M3 PLASTICA BIANCO NUT, M3 PLASTIC WHITE SCHRAUBENMUTTER, M3 KUNST. WEISS ECROU M3 PLASTIQUE BLANC TUERCA M3 PLASTICO BLANCO	
15	EU419036	SPACER SPACER, M3 ABSTANDSSTÜCK, M3 ENTRETOISE M3 DISTANCIADOR M3	

16	EU80889	TASTIERA COMANDI CONTROL KEYBOARD BEDINGUNGEN-TESTENBRETT TABLEAU A POUSSOIRS COMMANDES TECLADO DE MANDOS	
17	EU231016	SONDA TEMPERATURA TEMP. PROBE TEMPERATURSONDE SONDE SONDA TEMPERATURA (AMPOLLA ACERO)	
18	EU41124	PANNELLO ANTERIORE LP101-105 COMPLETO PANNELLO ANTERIORE LP101-105 COMPLETO PANEL DELANT. LP101-105 COMPLETO.	
19	EU41381	POLIESTERE POLYESTERE POLYESTERE POLYESTERE POLIESTER LAVA-OLLAS FAGOR	
20	EU69810	TENDINA COPERTURA TASTIERA PANNELLO ANTERIORE CURTAIN VORHANG RIDEAU CORTINA COPERTURA TECLADO PAN. DELANT.	

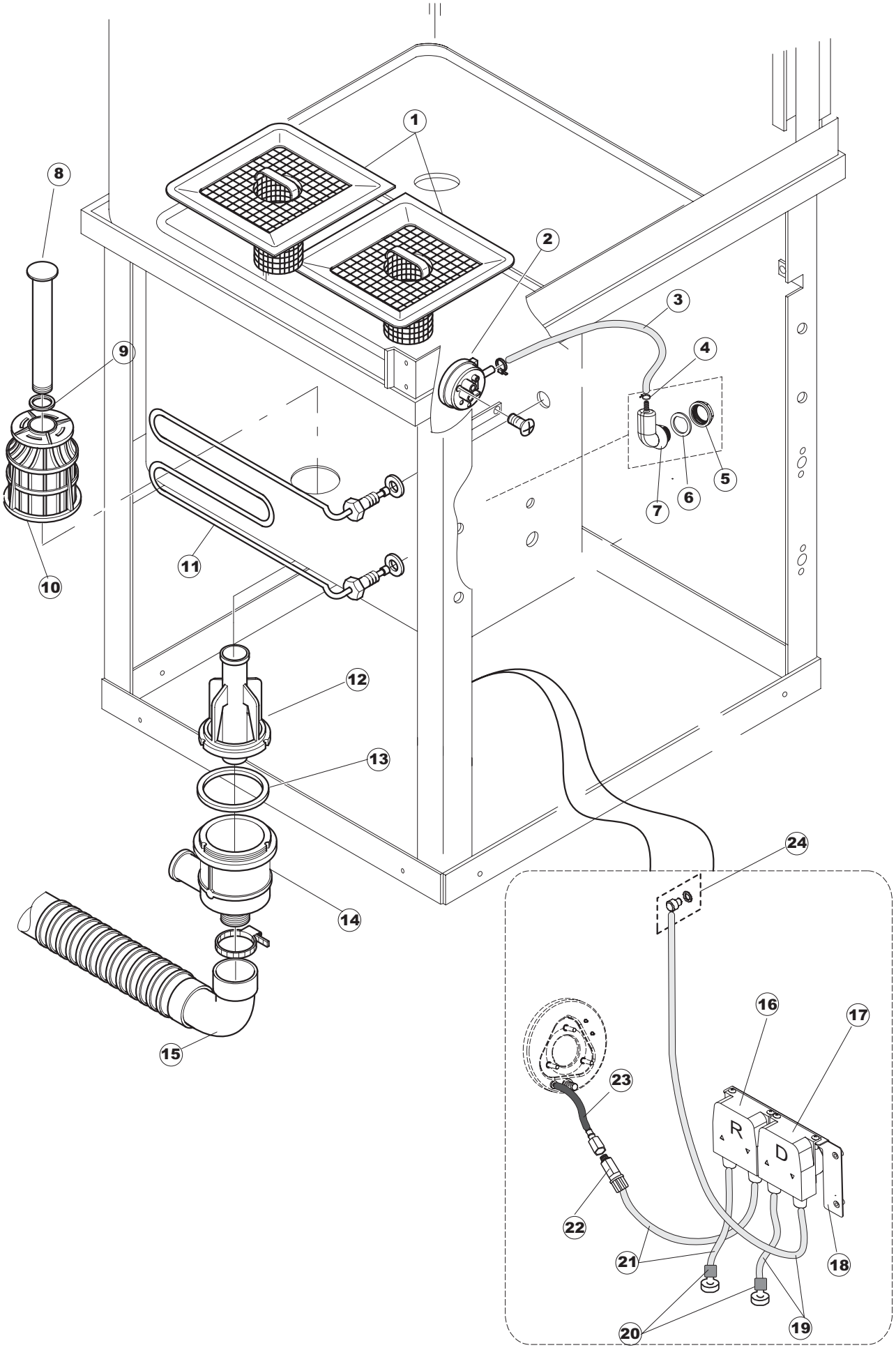
1
2
3
4
5
6
7
8
9
10
11
12
13
14
15
16
17
18
19
20
21
22
23
24
R
D

Listino componenti per pagina 3

1	EU41257	FILTRO VASCA COMPLETO TANK FILTER TANKSIEB, KOMPLETT FILTRE CUVE COMPLET, FILTRO CUBETA COMPLETO U61. .	
2	EU926049	PRESSOSTATO 761999 180-70 PRESSURE SWITCH 761999 180-70 DRUCKSCHALTER 761999 180-70 PRESSOSTAT 761999 180-70 PRESOSTATO 761999 180-70	
3	EU143253	TUBO SILICONE 3X8 SILICON PIPE 3X8 SILIKONSCHLAUCH 3X8 TUYAU SILICONE 3X8 TUBO SILICONA 3X8	
4	EUCFF10073	FASCETTA A FILO 10073 COLLIER DE SERRAGE EN FIL D'ACIER 10073 SCHLAUCHSCHELLE 10073 WIRE HOSECLAMP 10073 ABRAZADERA CON HILO 10073	
5	EU417120	DADO PLASTICA GRIGIO PLASTIC NUT KUNSTSTOFFMUTTER 1-1/4 ECROU EN PLASTIQUE TUERCA PLASTICO GRIS	
6	EU437098	GUARNIZIONE NUOVA CAMP.PRESS. PACKING FOR AIR TRAP OF PRESSURE SWITCH DICHTUNG FUER LUFTFALLE JOINT PRISE D'AIRE PRESSOSTAT JUNTA NUEVA CAMP.PRES.	
7	EU107012	CAMPANA PRESSOSTATO (L) RV40-50-CAPOTE AIR TRAP LUFTFALLE PRISE D'AIR CAMPANA PRESOSTATO (L) RV40-50-CAPOTA	
8	EU80250	TROPPO PIENO RIVER 82/83 OVERFLOW RIVER 82/83 ÜBERLAUF RIVER 82/83 TROP-PLEIN RIVER 82/83 REBOSE RIVER 82/83	
9	EUCGR4131NT	O-RING 4131 VITON NERO SH.70 O-ring 4131 BLACK SCREW SH.70 O-RING 4131 SCHWARZE SCHRAUBE SH.70 O-RING 4131 VIS J11312 SH.70 O-RING 4131 VITON NEGRO SH. 70	
10	EU121081	FILTRO POMPA GRIGIO 44/TERZ. FILTER, PUMP GREY 44/TERZ. FILTER, PUMPE GRAU 44/TERZ. FILTRE POMPE GRIS 44/TERZ. FILTRO BOMBA GRIS 44/TERZ.	
11	EU70562	RESISTENZA 3000W 230V MONOFASE TANK HEATING ELEMENT TANK WIEDERSTAND RESISTENCE CUVE	
12	EU80470	GHIERA SCARICO RING NUT, DRAIN GEWINDERING, ABLAUF BAGUE VIDANGE VIROLA DESCARGA COLG.VER COD.429038	
13	EU456040	OR 201 NBR70 22 O-ring 201 NBR70 22 O-Ring 201 NBR70 22 OR 201 NBR70 22 OR 201 NBR70 22	
14	EU136020	CORPO ASPIRAZIONE/SCARICO 22/44 INTAKE/DRAIN BODY 22/44 GEHAUSE, EINLASS/ABLASS 22/44 CORPS ASPIRATION/VIDANGE 22/44 CUERPO ASPIRACION/DESCARGA 22/44	
15	EU143136	TUBO SCARICO VERS.NE INTEGR.22 PIPE, DRAIN - INTEGR. VERSION 22 ABLASSROHR - VOLLST. VERSION 22 TUYAU VIDANGE VERS.NE INTEGR.22 TUBO DESCARGA VERSION INTEGR. 22	

16	EU209036	DOSAT.PERIST.BRILLANTANTE+NR P/F NPG DOSING PUMP RINSE-AID KLARSPÜLER POMPE DOSEUR PERISTALTIQUE RINCAGE DOSIFIC.PERIST. ABRILLANTADOR NO REG.	
17	EU209039	DOSAT.PERIST.DETERG.NON REG.(NPG-3)BLU DOSING DETERGENT PUMP SPÜLMITTELBEHÄLTER POMPE DOSEUR PERIST. DETER. NON REG. DOSSIFIC.PERIST.DETERGENTE NO REG.	
18	EU80675	STAFFA DOSATORI PERISTALTICI BRACKET TRAGBUEGEL ETRIER SOPORTE DOSIFICADORES PERIST. PG ACABADO	
19	EU143194	TUBO 4x6 CRISTAL TRASPARENTE PIPE 4x6 CRISTAL, TRANSP. SCHLAUCH 4X6 CRISTAL, DURCHS. TUYAU 4x6 CRISTAL TRANSPARENT TUBO 4x6 CRISTAL TRASPARENTE	
20	EU121075	FILTRO ASPIR.INOX(775239-001) FILTER, SUCT.INOX (775239-001) FUSSFILTER FILTRE ASPIR.INOX(775239-001) FILTRO ASPIR. INOX(775239-001)	
21	EUH.775601	TUBO 4x6 CRISTAL BLUE PVC PIPE 4x6 CRISTAL BLUE PVC ROHR 4x6 CRISTAL BLAU PVC TUYAU 4x6 CRISTAL BLEU PVC TUBO 4x6 CRISTAL AZUL PVC	
22	EU468201	RACCORDO CALZATUBO PER INIEZ.BRILL. CONNECTION VERBINDER FUER SCHLAUCH TP 5X11 UND VENTIL 468200 RACCORD EMPALME CALZATUBO PARA INYECC. ABRILL.	
23	EU143005	TUBO PRESS.TP 5x11 (CASER/15/NL C4N) PIPE, PRESSURE SWITCH TP 5x11 (CASER/15/NL C4N) SCHLAUCH TP 5X11 (CASER/15/NL C4N) TUYAU PRESS.TP 5x11 (CASER/15/NL C4N) TUBO PRES. TP 5x11 (CASER/15/NL C4N)	
24	EU468151	RACCORDO ENTRATA SAPONE CPL NM * SALDATO UNION, EXTRA DET. CPL NM * WELDED TANKEINLAUF CPL NM* RACCORD ENTREE SAVON CPL NM * SOUDE EMPALME ENTRADA JABON CPL NM * SOLDADO	

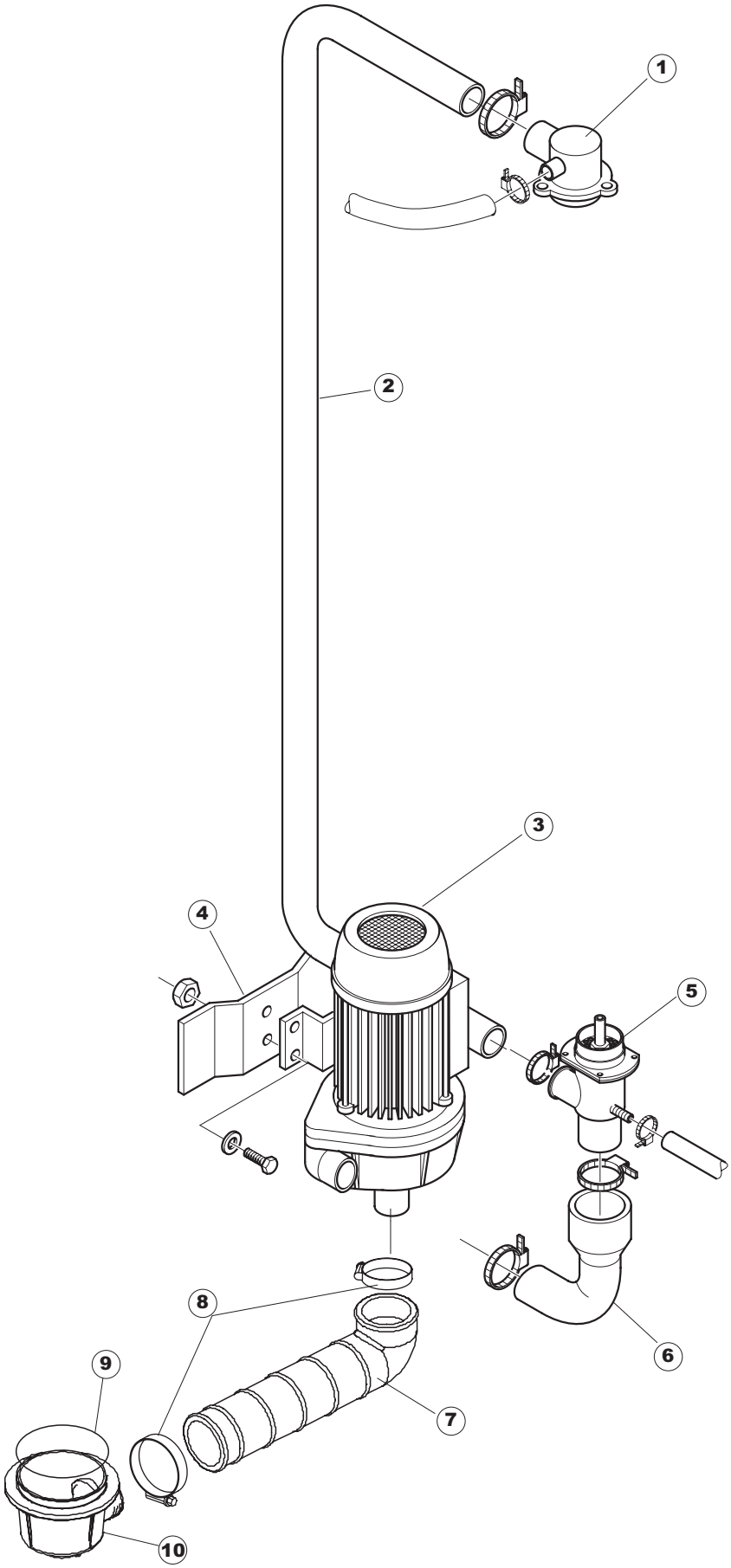
1
2
3
4
5
6
7
8
9
10

Listino componenti per pagina 4

1	EU35604	CONDOTTO SUPERIORE CONDUCTO CENTRAL SUPERIOR LP92	
2	EU41554	TUBO LAVAGGIO WASH PIPE SPUELLEITUNGAVAGE P/TUYAU LAVAGE TUBO LAVADO	
3	EU80115	EL.P 1,6KW 230-400V/50HZ (5295.5050) MOTORPUMP 1,6KW 230-400V/50HZ (5295.5050) ELEKTROPUMPE 1,6KW 230-400V/50HZ (5295.5050) EL.P 1,6KW 230-400V/50HZ (5295.5050) ELECTROBOMBA 1,6KW 230-400V/50HZ (5295.5050)	
4	EU41626	STAFFA POMPA	
5	EU4206301	RACCORDO LANCIA LAV.INF.EW610.. UNION, WASH.ARM LOW.EW610.. VERBINDUNGSST., SPÜLARM UNTEN EW610.. RACCORD RAMPE DE LAV.INF.EW610.. EMPALME LANZA LAV. INF. EW610. .	
6	EU41560	MANICOTTO COUPLING MUFFE MANCHON MANGUITO LAVADO	
7	EU80186	MANICOTTO ASPIRAZ.POMPA RIVER SLEEVE, SUCT.PUMP RIVER MUFFE, ABSAUG.PUMPE RIVER MANCHON ASPIRAT.POMPE RIVER MANGUITO ASPIRAC. BOMBA RIVER	
8	EUCFS3	FASCETTA A VITE TORRO W2B 60-80/12 CLAMP, HOSE-TYPE TORRO W2B 60-80/12 SCHELLE, SCHRAUBE TORRO W2B 60-80/12 BANDE DE SERRAGE A VIS TORRO W2B 60-80/12 ABRAZADERA CON TORNILLO TORRO W2B	
9	EU456040	OR 201 NBR70 22 O-ring 201 NBR70 22 O-Ring 201 NBR70 22 OR 201 NBR70 22 OR 201 NBR70 22	
10	EU136020	CORPO ASPIRAZIONE/SCARICO 22/44 INTAKE/DRAIN BODY 22/44 GEHAUSE, EINLASS/ABLASS 22/44 CORPS ASPIRATION/VIDANGE 22/44 CUERPO ASPIRACION/DESCARGA 22/44	

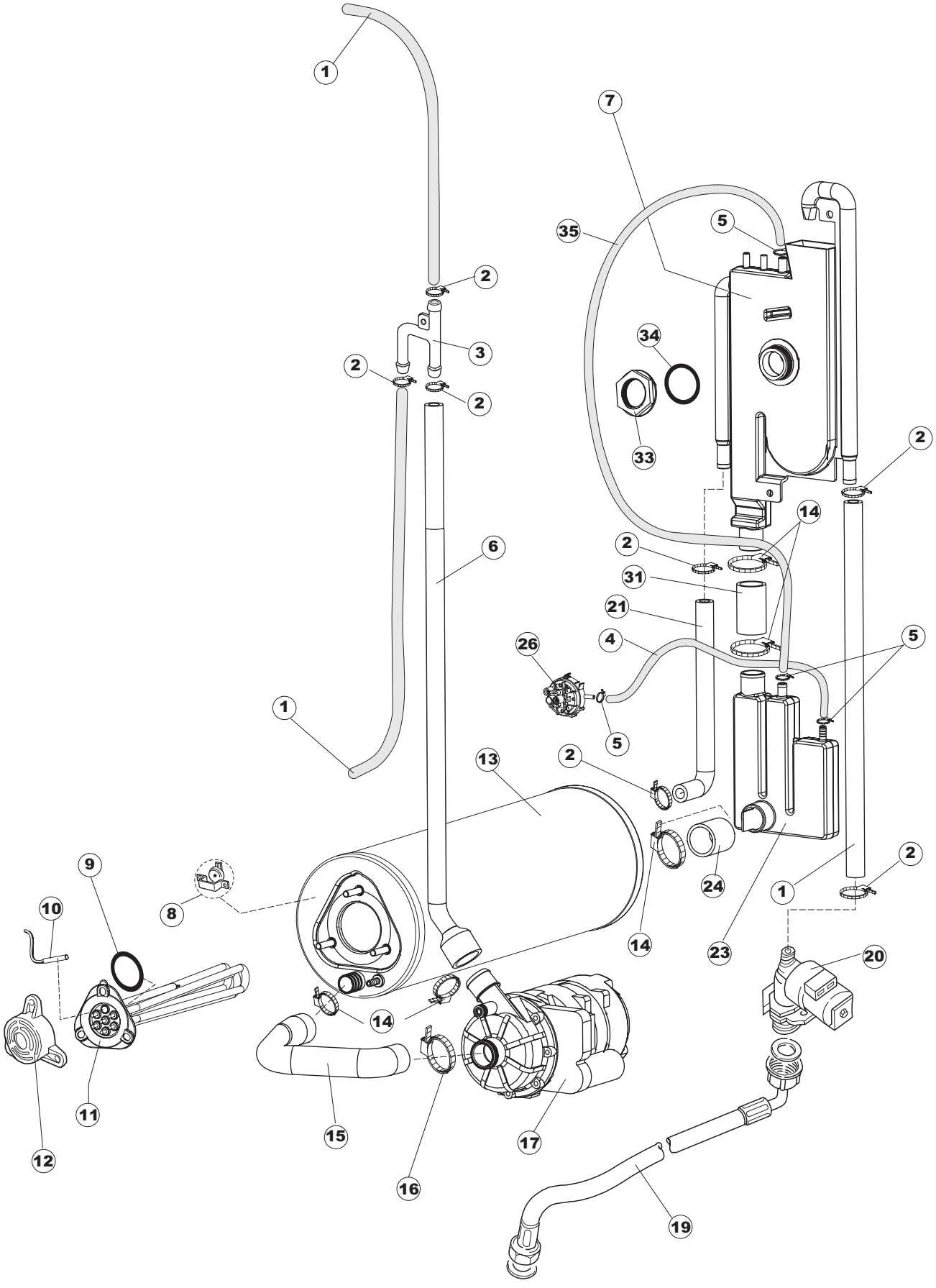
1
7
35
5
2
34
3
2
2
33
2
14
6
2
31
21
26
4
5
1
5
13
2
9
8
24
2
1
10
14
23
20
14
11
15
17
12
16
19

Listino componenti per pagina 5

1	EU143010	TUBO PRESS.TP 12X19.5 PIPE, PRESSURE SWITCH TP 12X19.5 ROHR, DRUCKSCHALTER TP 12X19.5 TUYAU PRESS.TP 12X19.5 TUBO PRES. TP 12X19. 5	
2	EU927322	FASCETTA NASTRO 14-24 CLAMP, TAPE 14-24 SCHLAUCHSCHELLE 12-22 BANDE DE SERRAGE CONVOYEUR 14-24 ABRAZADERA CINTA 12-22	
3	EUH.882974-001	RACCORDO A "T" IN PLASTICA PLASTIC COUPLING KUNSTSTOFFKUPPLUNG ACCOUPLEMENT EN PLASTIQUE EMPALME EN"T"(TS13) DE PLASTICO	
4	EU143131	TUBO GOMMA PIPE SCHLAUCH FUER DRUCKSCHALTER TUYAU VER CODIGO 143005	
6	EU41525	TUBO MANDATA RISCIACQUO (CRP) PIPE, DELIVERY PIPE FOR RINSE (CRP) ZUFLUSSROHR FÜR NACHSPÜLEN (CRP) TUYAU REFOULEMENT RINCAGE (CRP) TUBO IMPULSION ENJUAGUE (CRP)	
7	EU144021	AIRGAP SPECIALE LA50 PLASTIC AIRGAP AIR GAP GEOFFNETER BEHAELTER AIRGAP SPECIAL LA50 AIRGAP ESPECIAL LA50	
8	EU926189	TERMOSTATO BOILER SIC.95ø THERMOSTAT, BOILER, SAF.95ø SICHERHEITSTHERMOSTAT BOILER 95° THERMOSTAT CHAUDIERE SEC. 95ø TERMOSTATO CALENTADOR SEG. 95ø	
9	EU456002	OR 48x6,2 O-ring 48x6,2 O-Ring 48x6,2 OR 48x6,2 OR 48x6,2	
10	EU231016	SONDA TEMPERATURA TEMP. PROBE TEMPERATURSONDE SONDE SONDA TEMPERATURA (AMPOLLA ACERO)	
11	EU230083C	KIT RESISTENZA REB230083 (6KW) KIT, RESISTANCE REB230083 (6KW) KIT, WIDERSTAND REB230083 (6KW) KIT RESISTANCE REB230083 (6KW) KIT RESISTENCIA REB230083 (6KW)	
12	EU69870	PROTEZIONE RESISTENZA BOILER BOILER HEATING ELEMENT PROTECTION HEIZUNGSCHUETZ DES WARMWASSERBEREITERS PROTECTION RESISTANCE BOILER PROTECCION RESISTENCIA CALENTADOR	
13	EU104061	BOILER CRP LA50 BOILER CRP BOILER CRP SURCHAUFFEUR CRP CALENTADOR CRP LA50	
14	EUCFS18	FASCETTA A VITE TORRO 20-32/9 CLAMP, HOSE-TYPE TORRO 20-32/9 SCHLAUCHSCHELLE 20-32/9 BANDE DE SERRAGE A VIS TORRO 20-32/9 ABRAZADERA CON TORNILLO TORRO 20-32/9	
15	EU69068	MANICOTTO ASPIRAZ.CRP LA50 INTAKE COUPLING LA50 SAUGMUFFE LA50 MANCHON D'ASPIRATION MANGUITO ASPIRAC.CRP LA50	
16	EU423008	FASCETTA D20X32X9 TIPO TORRO ACC.W1 CLAMP, D20X32X9 TYPE TORRO ACC.W1 SCHLAUCHSCHELLE D20X32X9 TYP TORRO ACC.W1 BANDE DE SERR. D20X32X9 TYPE TORRO ACC.W1 ABRAZADERA D20X32X9 TIPO TORRO ENC. W1	

17	EU80627	ELETTROPOMPA 200W 230V-1PH-50HZ CON CONDENSATOR PUMP PUMPE POMPE ELECTROBOMBA ENJUAGUE 200W	
19	EU929169	TUBO DI CARICO DEL TERMOPLASTICO PIPE, THERMOPLASTIC DELIVERY ZULAUFSCHLAUCH, WASSER THERMOPLAST TUYAU DE CHARG. DU THERMOPLASTIQUE TUBO DE CARGA DEL TERMOPLASTICO	
20	EU240018	VALVOLA DI CARICO 1 VIA CRP LOADING S.VALVE 1-WAY CRP ZUFLUSSVENTIL 1-WEG CRP SOUPAPE DE CHARG. 1 VOIE CRP VALVULA DE CARGA 1 VIA CRP	
21	EU143005	TUBO PRESS.TP 5x11 (CASER/15/NL C4N) PIPE, PRESSURE SWITCH TP 5x11 (CASER/15/NL C4N) SCHLAUCH TP 5X11 (CASER/15/NL C4N) TUYAU PRESS.TP 5x11 (CASER/15/NL C4N) TUBO PRES. TP 5x11 (CASER/15/NL C4N)	
23	EU144032	SISTEMA CARICAMENTO CRP CON CAMP.PRESS. PLASTIC AIRGAP AIR GAP GEOFFNETER BEHAELTER RESERVOIR AIRGAP SISTEMA CARGA CRP	
24	EU127095	MANICOTTO BOILER->SISTEMA CRP MANIFOLD MUFFE MANGUITO CALENTADOR->SISTEMA CRP	
26	EU224002	PRESSURE SWITCH - 110/60 PRESSURE SWITCH - 110/60 PRESSURE SWITCH - 110/60 PRESSURE SWITCH - 110/60 PRESSURE SWITCH - 110/60	
31	EU929171	TUBO GOMMA 20X30 HOSE, RUBBER 20X30 SCHLAUCH, GUMMI 20X30 TUYAU CAOUTCHOUC 20X30 TUBO GOMA 20X30	
33	EU417125	DADO IN PLAST.CON COLLARE(171571) NUT MUTTER ECROU TUERCA DE PLAST.CON COLLAR(171571)	
34	EU437104	GUARNIZIONE D45D33S2 EPDM 70SH RUBBER GASKET DICHTUNG JOINT JUNTA D45D33S2 EPDM 70SH	
35	EUH.165168	TUBO PVC 6X9 CRISTAL TRASP. RAUCLAIR PVC PIPE PVC SCHLAUCH TUYAU PVC * TUBO PVC 6X9 CRISTAL TRANSPARENTE	

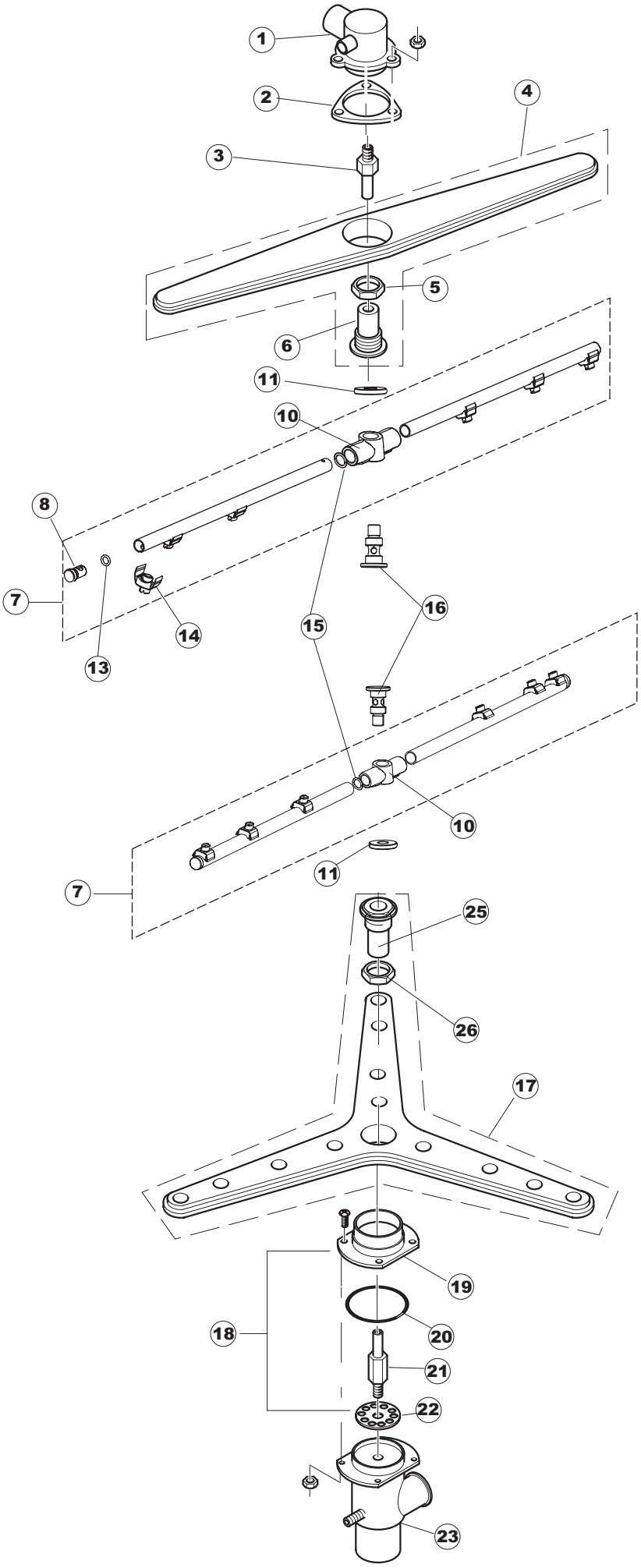
1
2
4
3
5
6
11
10
8
7
14
13
15
16
10
11
7
25
26
17
19
18
20
21
22
23

Listino componenti per pagina 6

1	EU35604	CONDOTTO SUPERIORE CONDUCTO CENTRAL SUPERIOR LP92	
2	EU437064	GUARNIZIONE COND.CENTR.SUP.50 GASKET, MANIFOLD, CENTR.UPP.50 DICHTUNG, SAMMELLEITUNG, ZENTR.OB.50 JOINT COND.CENTR.SUP.50 JUNTA COND. CENTR. SUP. 50	
3	EU80282	ALBERO PERNO RISC.RIVER SHAFT, WASH RINSE RIVER WELLE, ZAPFEN NACHSPÜLEN RIVER ARBRE PIVOT RINC.RIVER EJE PERNO ENJUAGUE RIVER	
4	EU80311	PETTINE LAVAGGIO RIVER CAPOT COMB, WASHING RIVER CAPOT KAMM, SPÜLEN RIVER-DURCHSCHUBSPÜLAUTOM. PEIGNE LAVAGE RIVER CAPOT PEINE LAVADO RIVER CAPOT	
5	EU80314	DADO LANCIA LAVAGGIO GRIGIO NUT, WASH-ARM GREY SCHRAUBENMUTTER, SPÜLLANZE GRAU ECROU RAMPE DE LAVAGE GRIS VER CODIGO 926128	
6	EU80310	SUPPORTO LANC/LAVAGGIO (RAL7001) SUPPORT, WASH-ARM/WASH. (RAL7001) HALTER, SPÜLLANZE/SPÜL. (RAL7001) SUPPORT RAMPE DE LAVAGE (RAL7001) SOPORTE LANC/LAVADO (RAL7001)	
7	EU41677	BRACCIO RISCIACQUO ROTATING RINSE ARM FOR POT AND PAN WASHE R NACHSPUELUNGSARM - DREHBAR - FUER KOCHTO EPFESPUI TOURNIQUET DE RINCAGE POUR LAVE-CASSEROL ES BRAZO ENJUAGUE	
8	EU926132	TAPPO PL.X BRACCIO DI RISC.(DWT312) CAP, PLASTIC FOR WASH. ARM (DWT312) PFROPFEN, KUNST. FÜR NACHSPÜLARM (DWT312) BOUCHON PL.POUR BRAS DE RINC.(DWT312) TAPON PL. X BRAZO DE ENJUAGUE (DWT312)	
10	EU69632	CORPO PETTINE ARM BODY KOERPER DES NACHSPUELARMES CORPS BRAS CUERPO PEINE ENJUAGUE.	
11	EU80679	GHIERA ULTRA RINSE INOX NUT RING BAGUE VIROLA ULTRA RINSE INOX	
13	EUCGR106	O-RING 106 GOMMA NITR. (6,75 X 1,78 NBR) O-ring 106 NITRILE RUBBER (6,75 X 1,78 NBR) O-RING 106 NITRILGUMMI (6,75 X 1,78 NBR) O-RING 106 CAOUTCHOUC NITRYLE (6,75 X 1,78 NBR) VER CÓDIGO 456030	
14	EU140036	SPRUZZO RISCIACQUO D.2,5 X TUBO D12 RINSE JET DUESE GLICEUR ROCIADOR ENJUAGUE D. 2,5	
15	EU456019	OR 2037 O-ring 2037 O-Ring 2037 OR 2037 OR 2037	
16	EU80644	PERNO PIVOT BRAS RINCAGE	
17	EU929195	LANCIA DI LAV.TRIANGOLARE COMPL.U61 COMPLETE TRIANGULAR WASH LANCE U61 DREIECKIGER WASCHARM KOMPL. U61 LANCE DE LAVAGE TRIANGULAIRE COMPLETE U61 LANZA DE LAV.TRIANGULARE COMPL.U61	

18	EU41064CP	CONTROFL.SUP.LANCIA LAV.U61/61H COUNTER-FLANGE, SUPP. FOR ARM-WASH U61/61H GEGENFLANSCH, OB. FÜR SPÜLLANZE U61/61H CONTRE-BRIDE SUP.RAMPE DE LAV.U61/61H CONTRABRIDA SUP. LANZA LAV. U61/61H	
19	EU41064	CONTROFL SUPP LANCIA LAV LP SUPPORT UNTERLAGE SUPPORT CONTRABRIDA SUP. LANZA LAV. LP	
20	EU926252	OR 4275 O-ring 4275 O-Ring 4275 OR 4275 OR 4275	
21	EU42053	PERNO LANCIA LAV.INFER.U61 PIN, LOW.WASH. WASH-ARM U61 ZAPFEN, UNT.SPÜLLANZE U61 PIVOT RAMPE DE LAV.INFER.U61 PERNO LANZA LAV. INFER. U61	
22	EU41185	PARZIALIZZATORE PL. DRAUGHT SHUTTER PL. DROSSELGERAT PL. ETRANGLEUR PL. PARCIALIZADOR PL.	
23	EU4206301	RACCORDO LANCIA LAV.INF.EW610.. UNION, WASH.ARM LOW.EW610.. VERBINDUNGSST., SPÜLARM UNTEN EW610.. RACCORD RAMPE DE LAV.INF.EW610.. EMPALME LANZA LAV. INF. EW610. .	
25	EU926129	SUPPORTO/MOZZO LANCIA LAVAGGIO SUPPORT/HUB FOR WASH-ARM HALTER/NABE FÜR SPÜLLANZE SUPPORT/MOYEU RAMPE DE LAVAGE SOPORTE/CUBO LANZA LAVADO	
26	EU80314	DADO LANCIA LAVAGGIO GRIGIO NUT, WASH-ARM GREY SCHRAUBENMUTTER, SPÜLLANZE GRAU ECROU RAMPE DE LAVAGE GRIS VER CODIGO 926128	

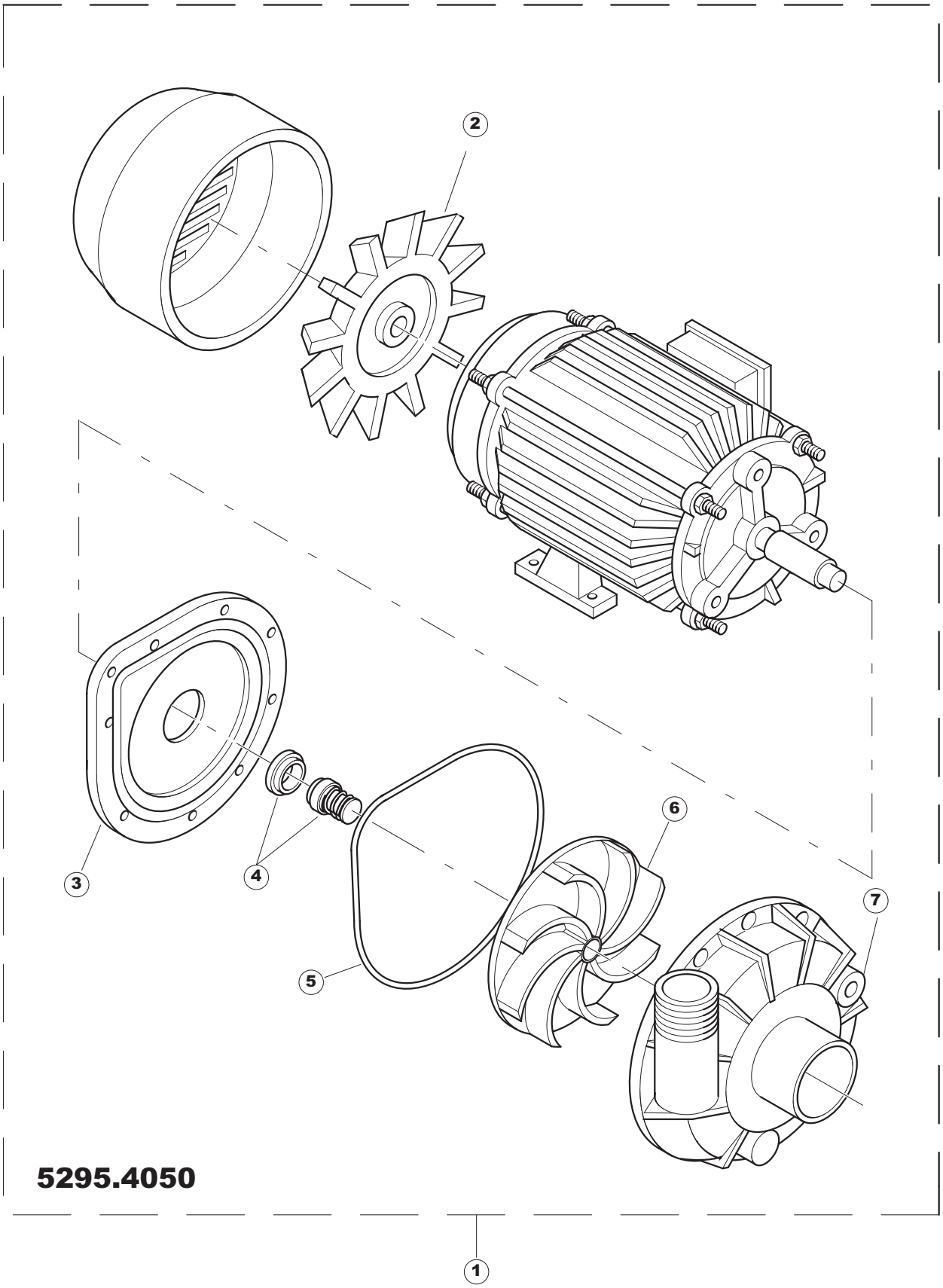
2
3
4
5
6
7
1
5295.4050

Listino componenti per pagina 7

1	EU80115	EL.P 1,6KW 230-400V/50HZ (5295.5050) MOTORPUMP 1,6KW 230-400V/50HZ (5295.5050) ELEKTROPUMPE 1,6KW 230-400V/50HZ (5295.5050) EL.P 1,6KW 230-400V/50HZ (5295.5050) ELECTROBOMBA 1,6KW 230-400V/50HZ (5295.5050)	
2	EU80122	FLANGIA CON SCUDO PUMP FLANGE (5295.4050) FLANSCH PUMPE (5295.4050) FLASQUE POMPE (5295.4050) BRIDA CON SCUDO E.BOMBA (5295.4050)	
3	EU80121	TENUTA ROTANTE POMPA(AB122414B/AC1326B SEAL, REVOLVING, PUMP(AB122414B/AC1326B DICHTUNG, ROTIER. - PUMPE(AB122414B/AC1326B JOINT PIVOTANT POMPE(AB122414B/AC1326B ESTANQ. ROTOR BOMBA(AB122414B/AC1326B	
4	EU80120	GUARNIZIONE EL-POMPA (5295.4050) GASKET, EL.PUMP (5295.4050) DICHTUNG, EL.PUMPE (5295.4050) JOINT ELECTROPOMPE (5295.4050) JUNTA ELECTROBOMBA (5295. 4050)	
5	EU80119	GIRANTE E-POMPA (5295.4050) ELECTR.PUMP IMPELLER (5295.4050) LAUFRAD ELEKTROPUMPE (5295.4050) ROUE ELECTROPOMPE (5295.4050) ROTOR E-BOMBA (5295. 4050)	
6	EU80118	CHIOCCIOLA EL-POMPA (5295.4050) ELECTROPUMP HOUSING PUMPENGEHAEUSE VOLUTE POUR ELECTROPOMPE ESPIRAL EL-BOMBA (5295.4050)	