FAGOR

SPARE PARTS CATALOGUE
ERSATZTEILKATALOG
CATALOGUE PIECES DETACHEES
CATALOGO PARTI RICAMBIO
CATALOGO DE PIEZAS DE RECAMBIO
CATALOGO PECAS DE REPOSICAO

LU60B

14-02-2018

Tav.1: Carrozzeria
Tav.2: Impianto elettrico
Tav.3: Componenti in vasca
Tav.4: Circuito di lavaggio
Tav.5: Circuito di risciacquo
Tav.6: Lance di lavaggio
Tav.7: Pompa di lavaggio
Tav.8: Pompa di scarico

Tab.1: Carrocería
Tab.2: Instalación eléctrica
Tab.3: Componentes en cuba
Tab.4: Circuito de lavado
Tab.5: Circuito d'enjuague
Tab.6: Brazos de lavado
Tab.7: Bomba de lavado
Tab.8: Bomba de descarga

Taf.1: Verkleidung
Taf.2: Elektrische Anlage
Taf.3: Bauteile im Waschtank
Taf.4: Spuelschaltung
Taf.5: Nachspuelschaltung
Taf.6: Wascharme
Taf.7: Spuelpumpe
Taf.8: Laugenpumpe

Tav.1: Machine body
Tav.2: Electrical components
Tav.3: Components in the tank
Tav.4: Washing circuit
Tav.5: Rinsing circuit
Tav.6: Washing arms
Tav.7: Washing pump
Tav.8: Draining pump

Tab.1: Carrosserie
Tab.2: Installation électrique
Tab.3: Composants de cuve
Tab.4: Circuit de lavage
Tab.5: Circuit de rinçage
Tab.6: Bras de lavage
Tab.7: Pompe de lavage
Tab.8: Pompe de vidange

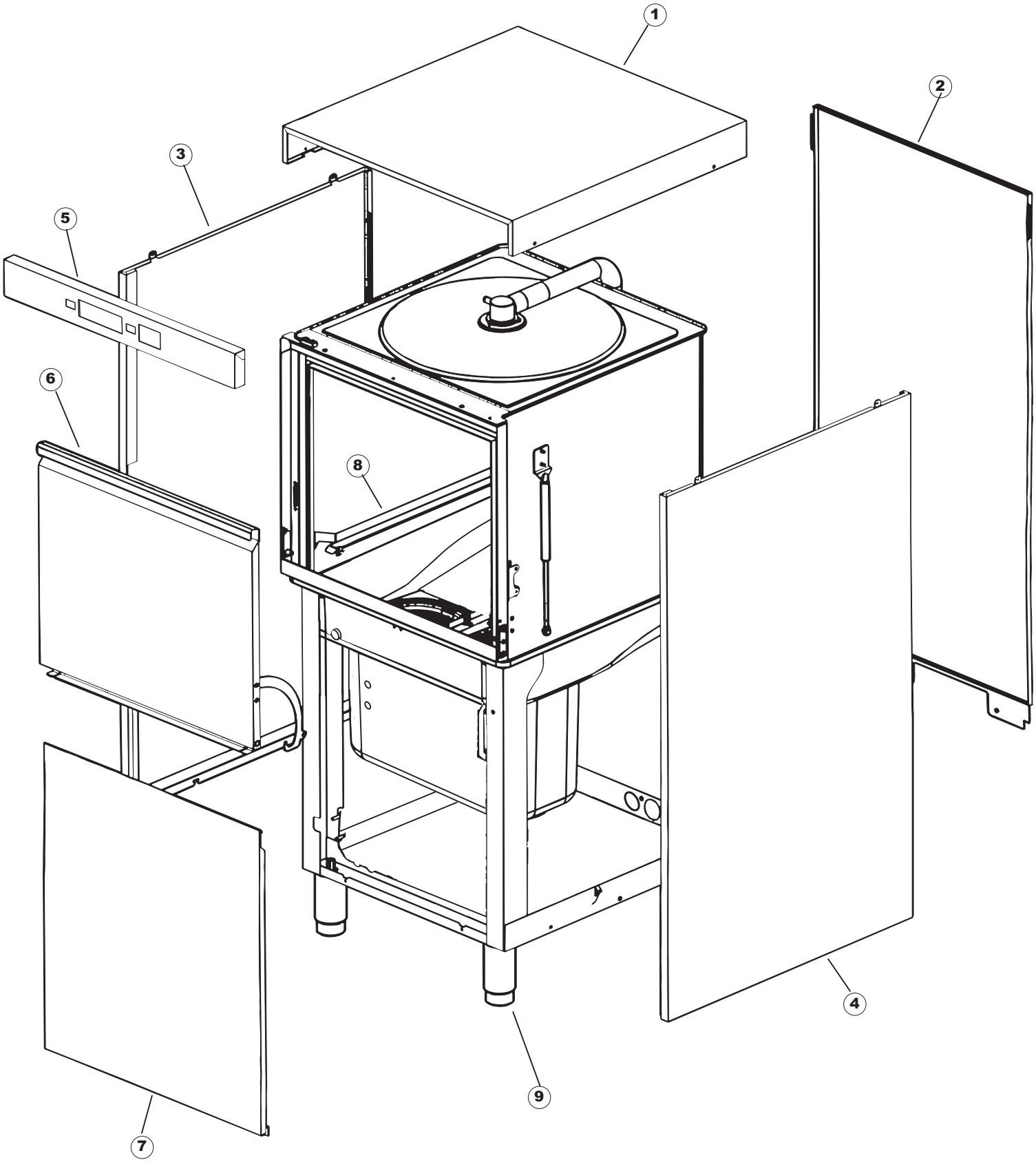
1
2
3
5
6
8
4
9
7

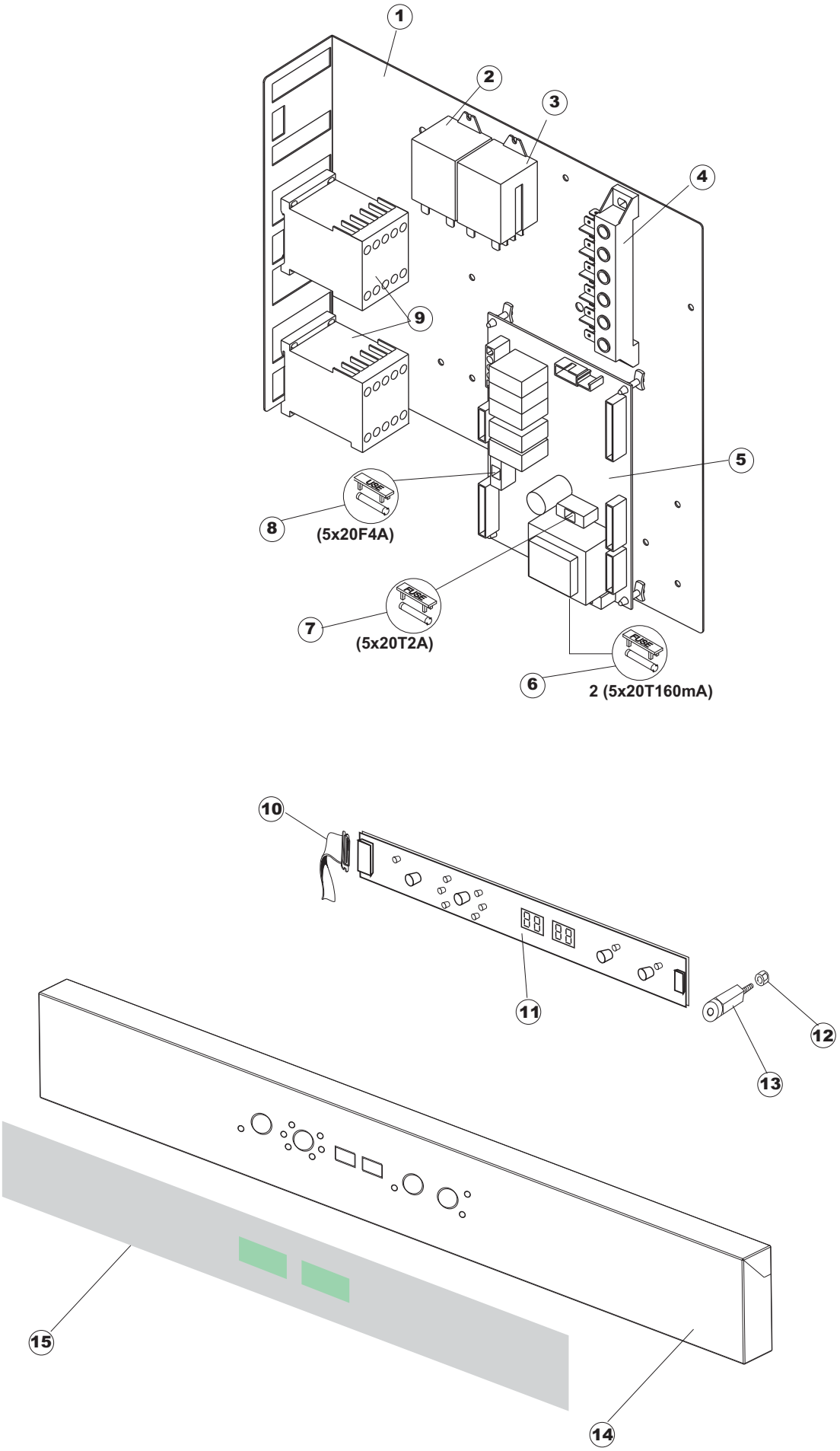
1
2
3
4
9
5
8
(5x20F4A)
7
(5x20T2A)
6
2 (5x20T160mA)
10
11
12
13
15
14

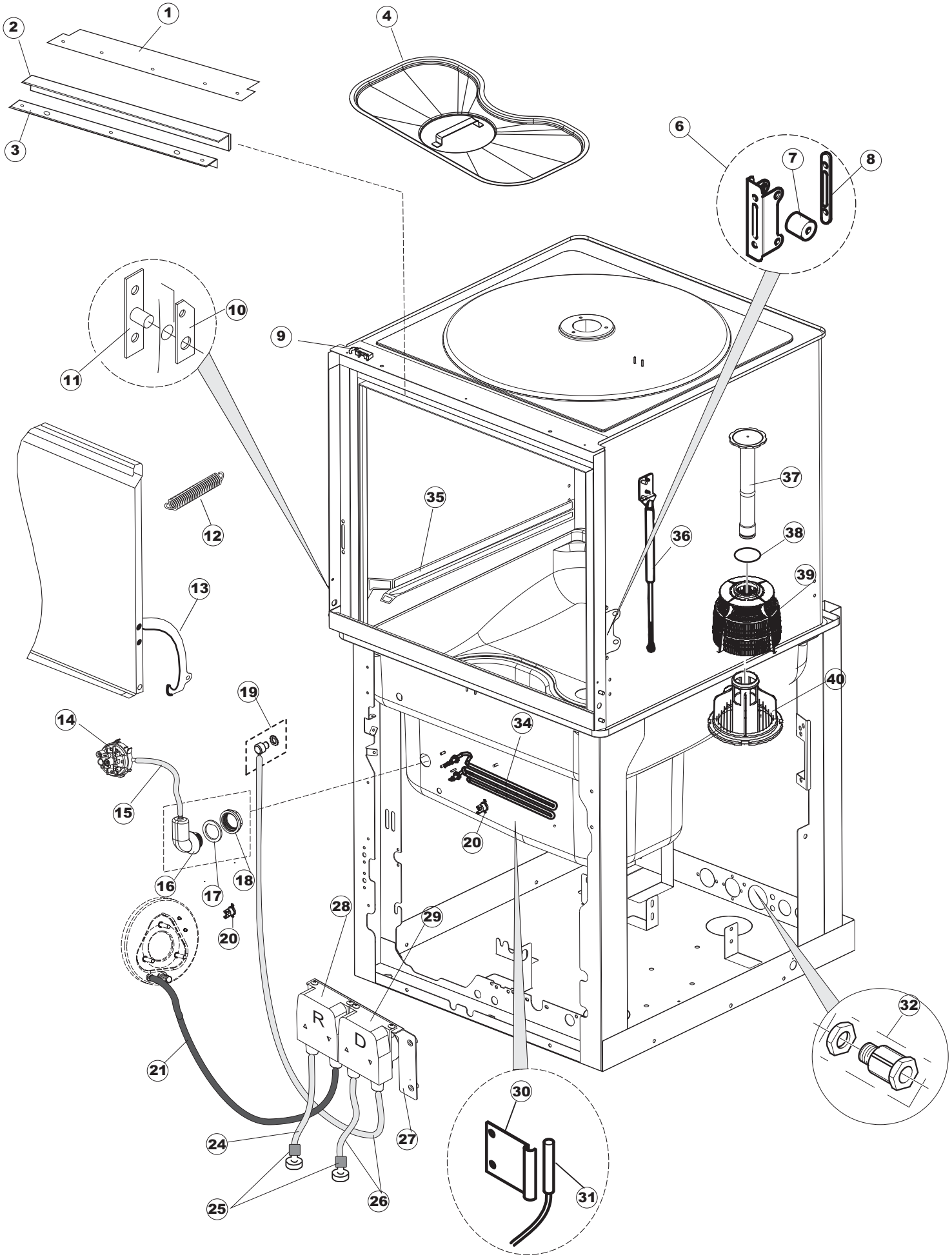
1
2
3
4
6
7
8
9
10
11
12
13
14
15
16
17
18
19
20
21
24
25
26
27
28
29
30
31
32
34
35
36
37
38
39
40
R
D

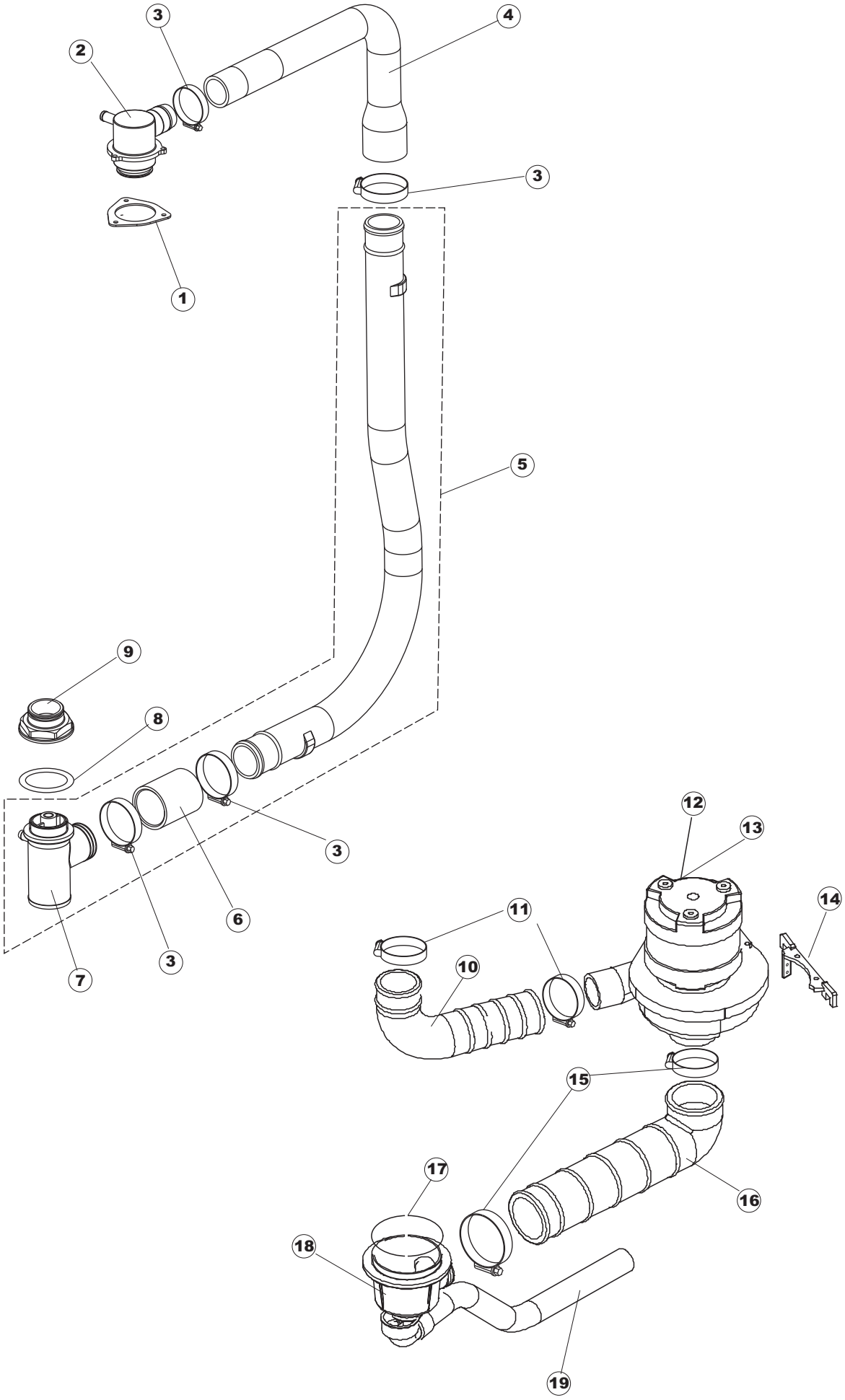
3
4
2
3
1
5
9
8
3
6
3
7
12
13
14
11
10
15
17
16
18
19

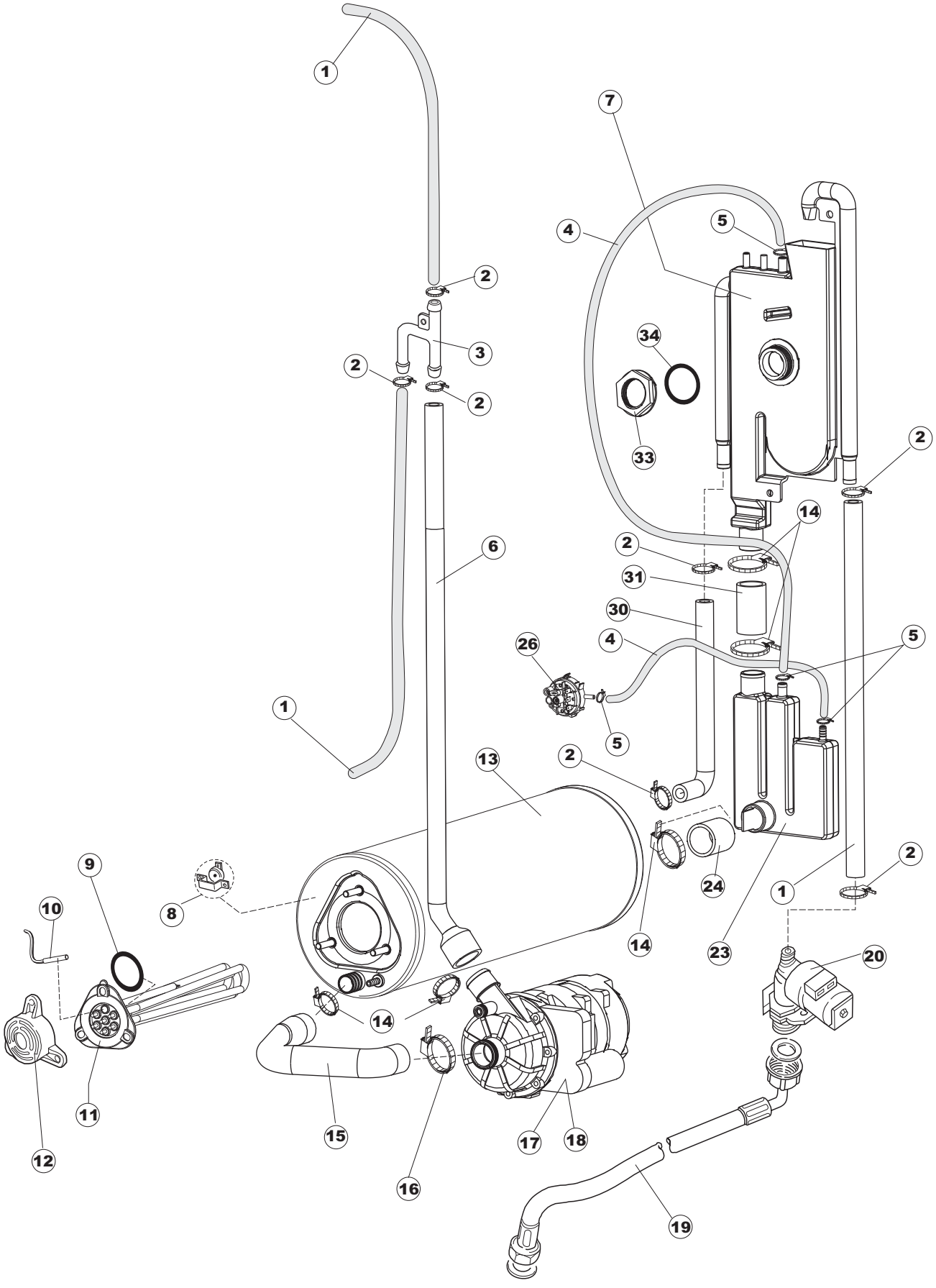
1
7
4
5
2
34
3
2
2
33
2
14
6
2
31
30
26
4
5
1
5
13
2
9
8
24
2
1
10
14
23
20
14
11
15
17
18
12
16
19

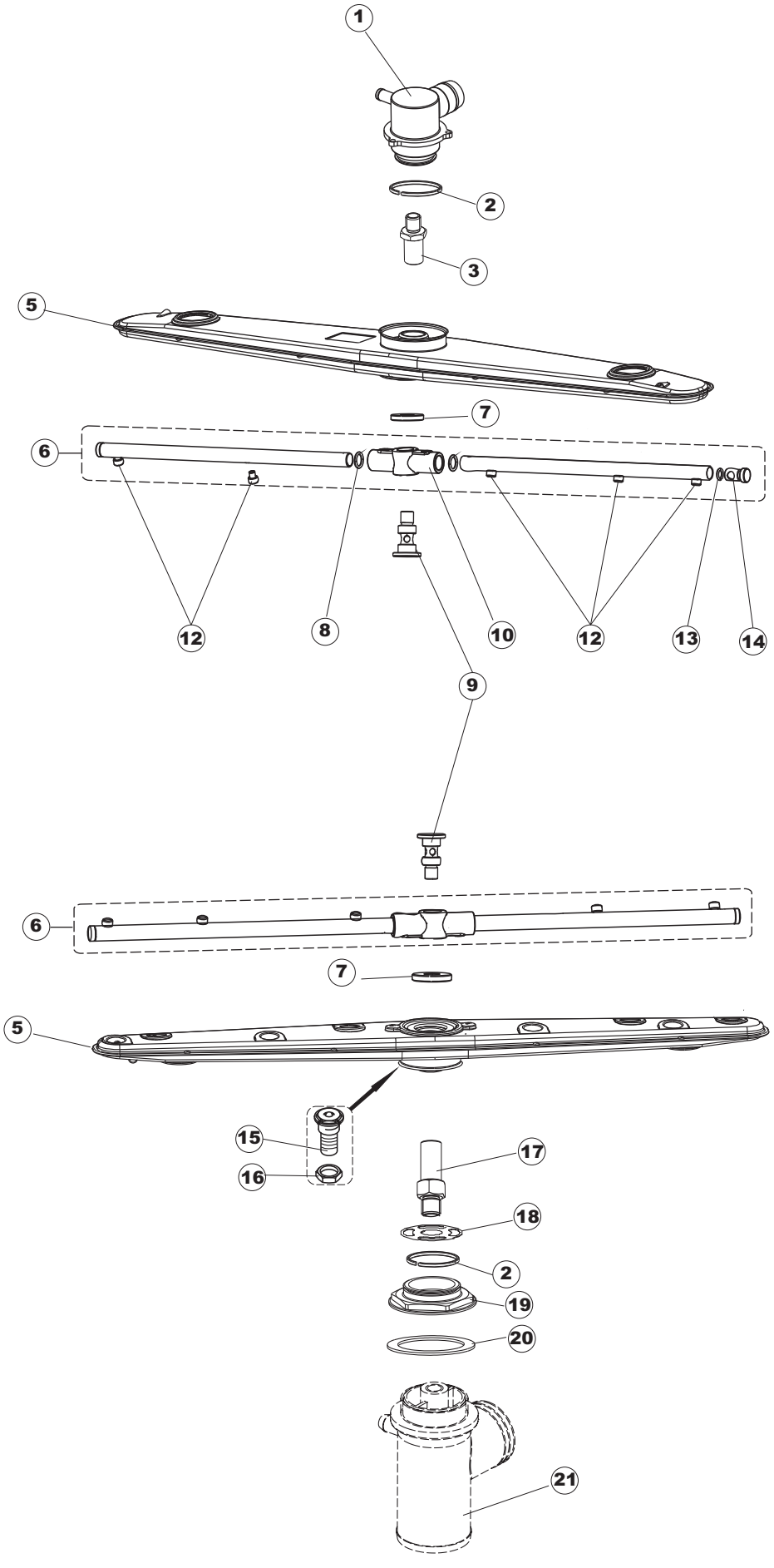
1
2
3
5
7
6
12
8
10
12
13
14
9
6
7
5
15
16
17
18
2
19
20
21

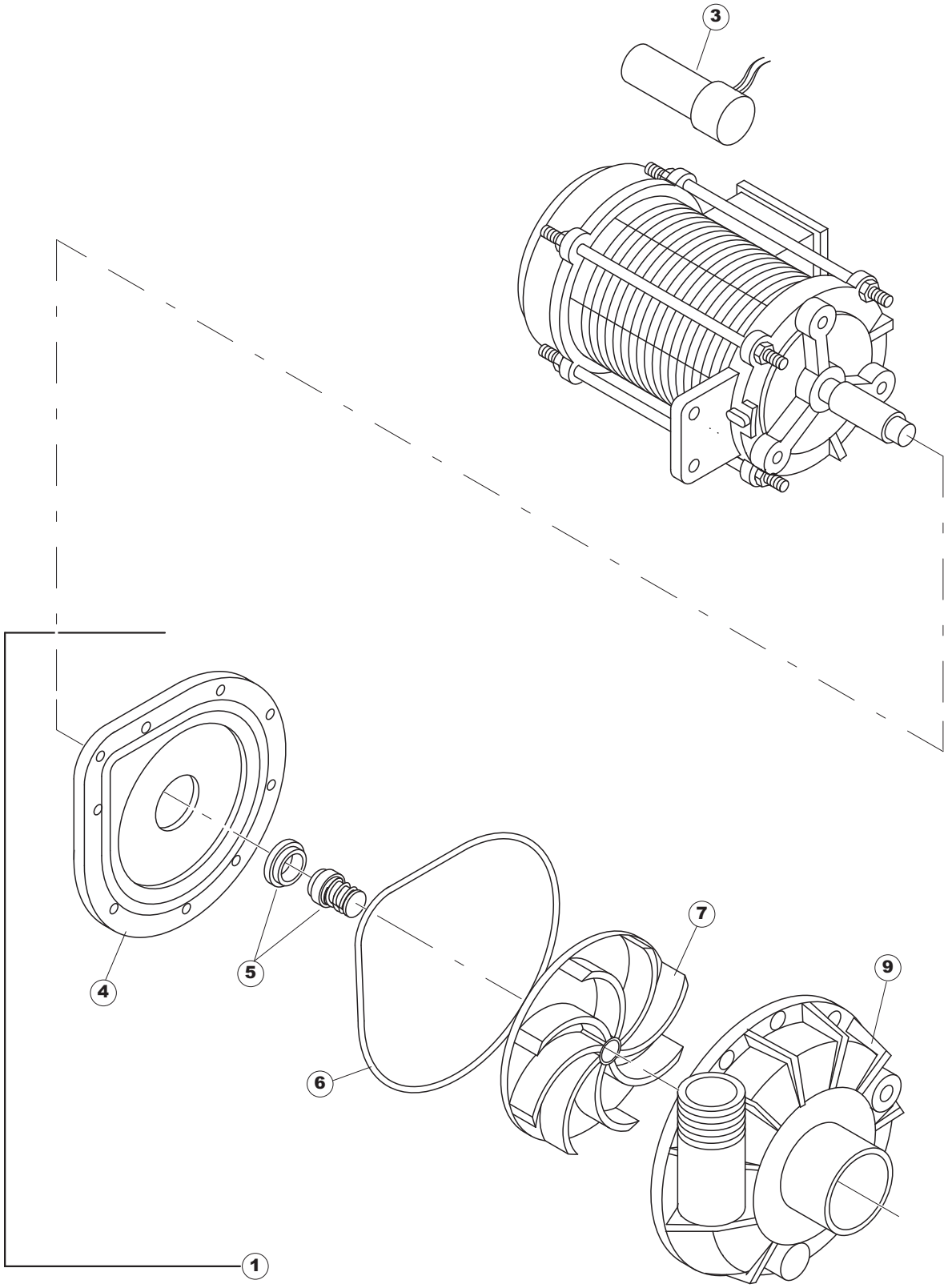

(CAM1733)

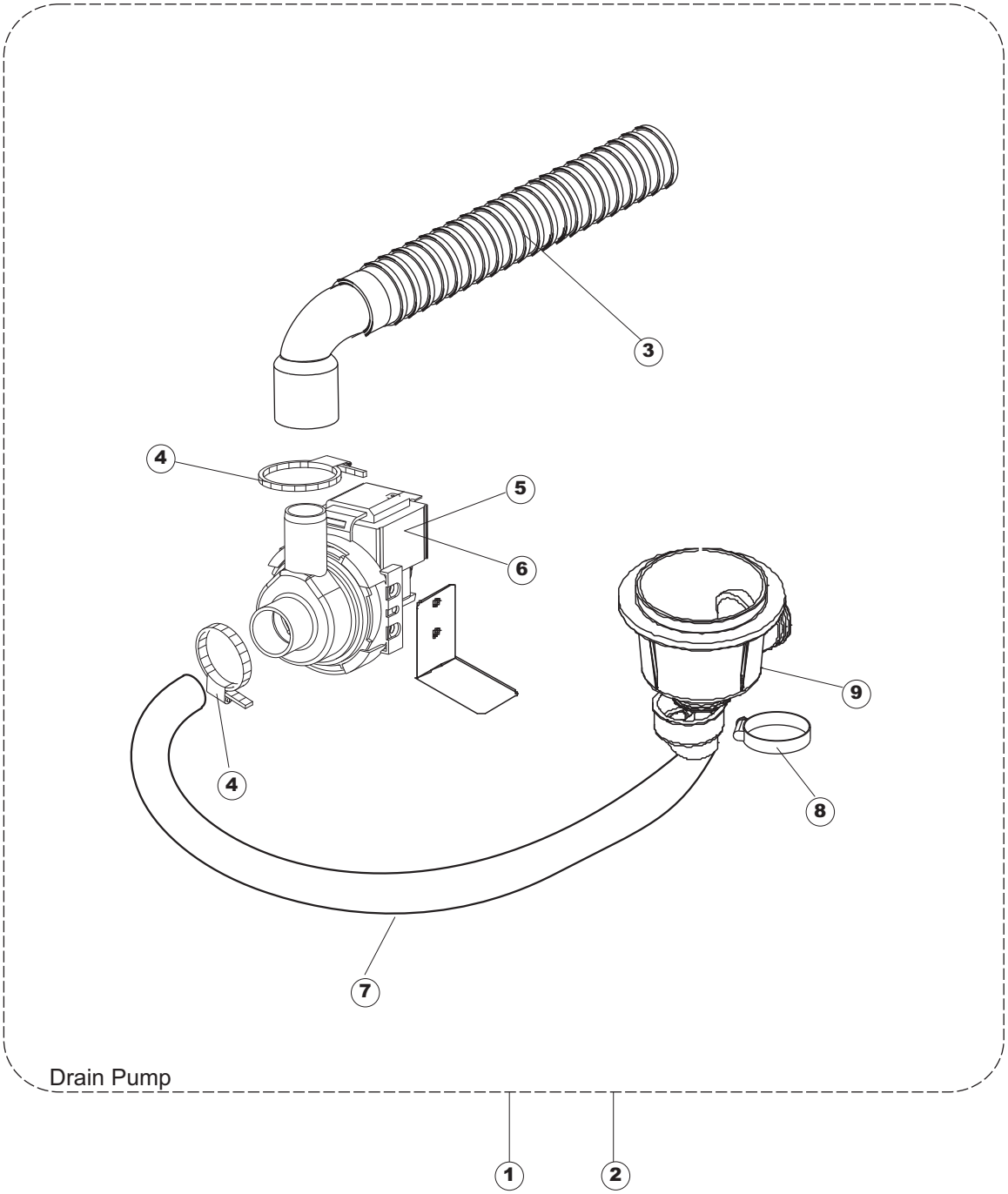

Drain Pump

KLP92FG POT&PAN WASHER LP92 LU60B FAGOR

(*) Recommended spare part.

Page	Spare part position	Spare part code no.	Old code number	Description	U.m.
1	1	35030		COVER	NR
1	2	35045		BACK PANEL	NR
1	3	35040		LEFT SIDE PANEL	NR
1	4	35035		RIGHT SIDE PANEL	NR
1	5	35056		CONTROL PANEL	NR
1	6	35008		DOOR	NR
1	7	35050		FRONT PANEL	NR
1	8	35500		NOT IN PRICE-LIST	
1	9	927006	DWP127	FOOT	NR
2	1	80459		WIRING PANEL	NR
2	2	DER111		RELAY 30A 230AC 653182300300	NR
2	3	929115	DER1108	RELAY 16A 230V	NR
2	4	220011	REB220011	TERMINAL BLOCK	NR
2	5	215032-1		MAIN BOARD	NR
2	6	228012		FUSE	NR
2	7	228011		FUSE	NR
2	8	228004		FUSE	NR
2	9	80350		CONTACTOR	NR
2	10	80933		FLAT CABLE	NR
2	11	227084		PUSH BUTTONS ASSEMBLY	NR
2	12	417119		NUT	NR
2	13	419036		INTERFACE BOARD DISTANCE KEEPERS	NR
2	14	35056		CONTROL PANEL	NR
2	15	35172		CONTROL ADHESIVE INTERFACE	NR
3	1	35005PZ		SQ.FISSAGGIO CRUSCOTTO LP92 LASERATO	NR
3	2	35017		DOOR GASKET LP92/GS60	NR
3	3	35016		NOT IN PRICE-LIST	
3	4	80410		STAINER	NR
3	6	35300		DOOR-STOP BAR	NR
3	7	35105		STOP RUN HOOD	NR
3	8	307012		DOOR STOPPER DRIVE	NR
3	9	80871		MAGNETIC DOOR SWITCH	NR

KLP92FG POT&PAN WASHER LP92 LU60B FAGOR

(*) Recommended spare part.

Page	Spare part position	Spare part code no.	Old code number	Description	U.m.
3	10	35510		SPESSORE LATERALE SPORTELLO LP92	NR
3	11	35060		CERNIERA SPORTELLO LP92	NR
3	12	35020		SPRING DOOR	NR
3	13	35300		DOOR-STOP BAR	NR
3	14	69850		PRESSURE SWITCH TYPE 45/22	NR
3	15	143131	SPG47	PIPE	MT
3	16	70600		AIR TRAP for pressure switch	NR
3	17	437098		GASKET	NR
3	18	417120		NUT	NR
3	19	999348		DETERGENT TANK FITTING	NR
3	20	926189	DRT140	CONTACT SAFETY-THERMOSTAT (REPLACES	NR
3	21	143005	SPG10	LINEN RUBBER PIPE 5X12 - BLACK	MT
3	24	H.775601		PIPE	MT
3	25	121993		filter aid dispenser	NR
3	26	143194	REB143194	PIPE	MT
3	27	80675		support bracket	NR
3	28	209042		DOSING PUMP	NR
3	29	209043		DETERGENT DOSING PUMP	NR
3	30	H.775489-001		Support temperature probe	NR
3	31	231016		TEMPERATURE PROBE	NR
3	32	929103	DEP520	CABLE GLAND	NR
3	34	70562		HEATING ELEMENT	NR
3	35	35500		NOT IN PRICE-LIST	
3	36	35070		SPRING	NR
3	37	80249	C.80249	OVERFLOW PIPE	NR
3	38	CGR4131NT		O-RING	NR
3	39	121081	REB121081	STAINER	NR
3	40	429038	REB429038	RING NUT	NR
4	1	437064	REB437064	GASKET	NR
4	2	35604		lower MAIN MANIFOLD	NR
4	3	CFS1A		HOSE CLAMP	NR
4	4	35603		PIPE	NR

KLP92FG POT&PAN WASHER LP92 LU60B FAGOR

(*) Recommended spare part.

Page	Spare part position	Spare part code no.	Old code number	Description	U.m.
4	5	35400		PIPE	NR
4	6	80189		DELIVERY WASH HOSE	NR
4	7	80179		PIPE FITTING	NR
4	8	80182		GASKET	NR
4	9	80285		RING NUT	NR
4	10	80188	C.80188	DELIVERY WASH HOSE	NR
4	11	CFS2		CLAMP, TORRO W1/W2B 50-70/12	NR
4	12	80134		WASHPUMP	NR
4	13	80113HZ		WASHPUMP	NR
4	14	80545		support bracket	NR
4	15	CFS3		CLAMP, HOSE-TYPE TORRO W2B 60-80/12	NR
4	16	80186	C.80186	suction pipe	NR
4	17	456040	REB456040	O-ring	NR
4	18	136020	REB136020	ASPIRATION AND DRAIN BODY	NR
4	19	143136	REB143136	DRAIN HOSE	NR
5	1	CFS18		HOSE CLAMP	NR
5	2	927322	CFS14	HOSE CLAMP	NR
5	3	H.882974-001		MAINFOLD	NR
5	4	143131	SPG47	PIPE	MT
5	5	423026		CABLE TIE	NR
5	6	41525		RINSE DELIVERY TUBE(CRP)	NR
5	7	144021		BREAK TANK	NR
5	8	926189	DRT140	CONTACT SAFETY-THERMOSTAT (REPLACES	NR
5	9	456002	REB456002	O-ring	NR
5	10	231016		TEMPERATURE PROBE	NR
5	11	230083C	REB230083C	HEATING ELEMENT	NR
5	12	69870		BOILER HEATING ELEMENT PROTECTION	NR
5	13	104061		BOILER	NR
5	14	CFS18		HOSE CLAMP	NR
5	15	69068		PIPE	NR
5	16	423008	CFS24	HOSE CLAMP	NR
5	17	80627		rinse pump 50 Hz	NR

KLP92FG POT&PAN WASHER LP92 LU60B FAGOR

(*) Recommended spare part.

Page	Spare part position	Spare part code no.	Old code number	Description	U.m.
5	18	80629		rinse pump 60 Hz	NR
5	19	143270		INLET WRAS PIPE	NR
5	20	240018		SOLENOID VALVE	NR
5	23	144032		LOADING SYSTEM BOILER CRP WITH BELL PRESSURE SWITCH	NR
5	24	127095		BOILER PIPE	NR
5	26	224002	REB224002	PRESSURE SWITCH TYPE 110-60	NR
5	30	143131	SPG47	PIPE	MT
5	31	929171	SPG2230	RUBBER PIPE 20X29	MT
5	33	417125		NUT	NR
5	34	437104		GASKET	NR
6	1	35604		lower MAIN MANIFOLD	NR
6	2	80184		SEALING RING	NR
6	3	80282	C.80282	PIVOT	NR
6	5	80311	C.80311	COMPLETE WASH ARM	NR
6	6	69721		COMPLETE RINSE ARM	NR
6	7	K80679		RING NUT M12 WITH TEFLON WASHER	NR
6	8	456019	REB456019	O-ring	NR
6	9	80644		PIVOT	NR
6	10	69632		BODY ARM	NR
6	12	927068	CSP290	RINSE-NOZZLE FOR RACK-CONVEYOR	NR
6	13	456030		O-ring	NR
6	14	926132		PLASTIC RINSE ARM CAP	NR
6	15	80310		GREY WASH ARM HOLDER (RAL 7001)	NR
6	16	80314	C.80314	RING NUT	NR
6	17	80283		BOTTOM PIVOT	NR
6	18	80316	C.80316	FLOW REDUCER	NR
6	19	80285		RING NUT	NR
6	20	80182		GASKET	NR
6	21	80179		PIPE FITTING	NR
7	1	80134		WASHPUMP	NR
7	2			NOT IN PRICE-LIST	
7	3	80191		CAPACITOR	NR

(*) Recommended spare part.

Page	Spare part position	Spare part code no.	Old code number	Description	U.m.
7	4	80196		FLANGE	NR
7	5	80193		GASKET	NR
7	6	80199		GASKET	NR
7	7	80197		ELECTROPUMP IMPELLER	NR
7	8			NOT IN PRICE-LIST	
7	9	80198		ELECTROPUMP HOUSING	NR
8	1	69702		NOT IN PRICE-LIST	
8	2	69702HZ		DRAIN PUMP KIT	NR
8	3	DZS151		DRAIN HOSE	NR
8	4	CFS18		HOSE CLAMP	NR
8	5	130177		DRAIN PUMP 50HZ	NR
8	6	130181		DRAIN PUMP 60 HZ	NR
8	7	127056	REB127056	PUMP ASPIRATION SLEEVE	NR
8	8	CFS1A		HOSE CLAMP	NR
8	9	136020	REB136020	ASPIRATION AND DRAIN BODY	NR

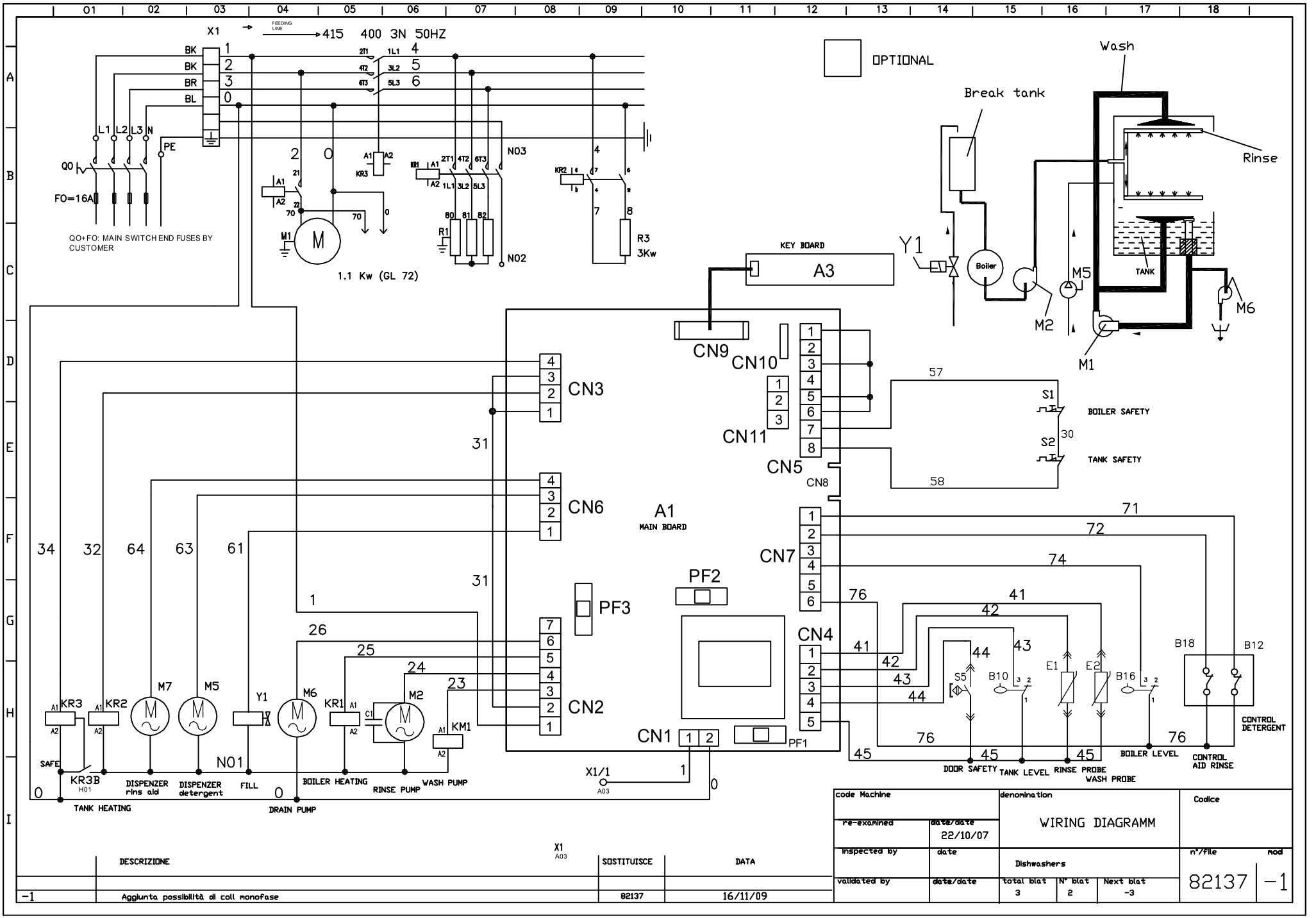

code Machine		denomination	Codice
re-examined	data/date 22/10/07	WIRING DIAGRAMM	
inspected by	date	Dishwashers	n°/file 82137 mod -1
validated by	date/date	total blat 3 / N° blat 2 / Next blat -3	

	DESCRIZIONE	SOSTITUISCE	DATA
-1	Aggiunta possibilità di coll monofase	82137	16/11/09

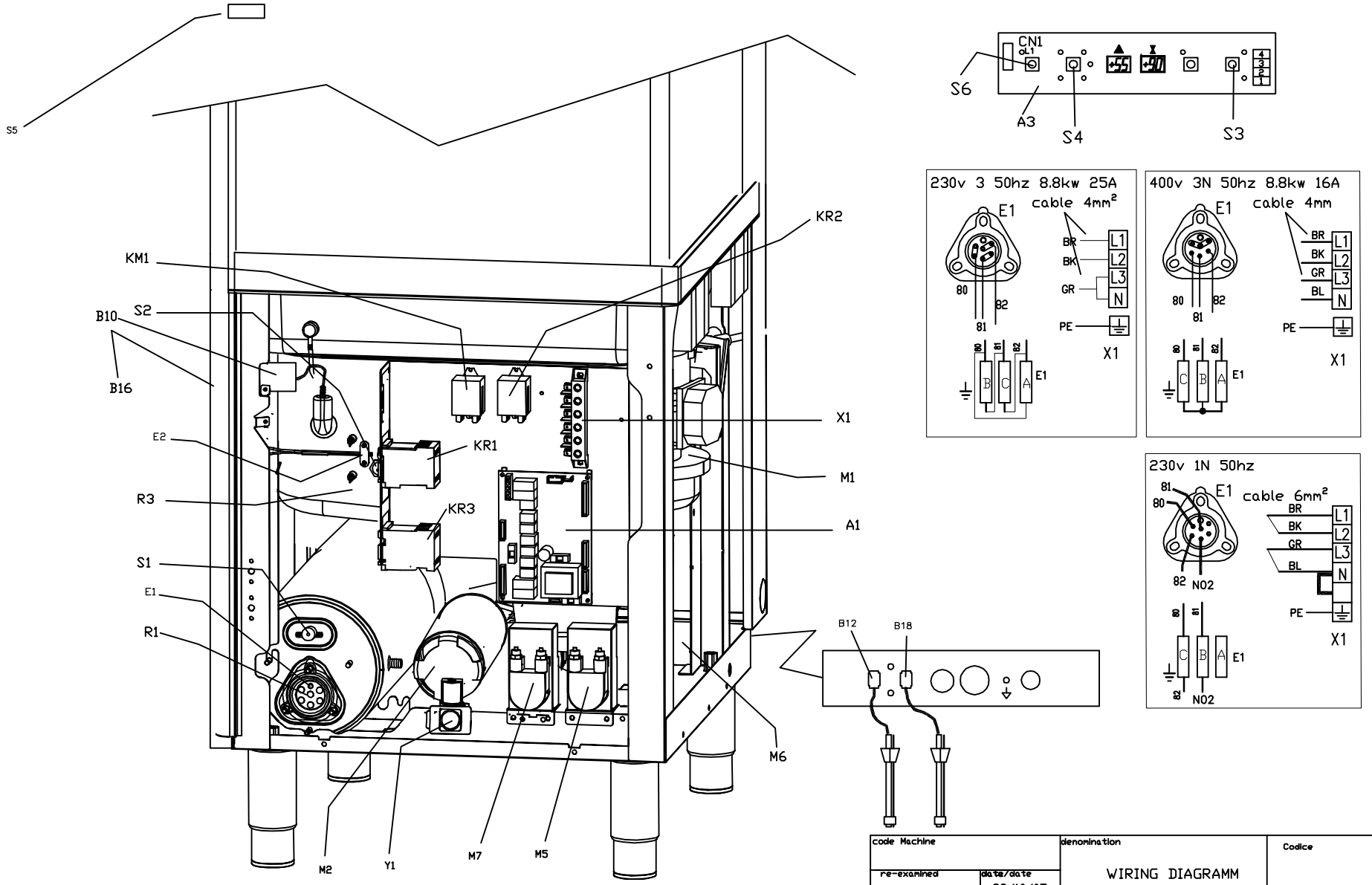

DESCRIZIONE	SOSTITUISCE	DATA
-1 Aggiunta possibilità di coll monofase	82137	16/11/09

code Machine		denomination: WIRING DIAGRAMM	Codice
re-examined	data/date 22/10/07		
inspected by	data/date	Dishwashers	n°/file: 82137L — mod: -1
validated by	data/date	total blat: 3 — N° blat: 2 — Next blat: -3	

S6	PULSANTE DI LINEA MAIN SWITCH	INTERRUPTEUR DE LIGNE NETZSCHALTER
S5	MICROINTERRUTTORE MAGNETICO MAGNETIC SAFETY MICROSWITCH	MICROINTERRUPTEUR MAGNETIQUE MAGNETISCHER SICHERHITSSCHALTER
S3	INTERRUTTORE DI CICLO CYCLE SWITCH	INTERRUPTEUR DE DEMARRAGE WASCHVORGANGSSCHALTER
S4	SELETTORE CICLO CYCLE COMMUTATOR	SELECTEUR CYCLE WAEHLSCHALTER FUER WASCHVORGANGSDAUDER
S1	TERMOSTATO SICUREZZA BOILER SAFETY BOOSTER HEATER THERMOSTAT	THERMOSTAT DE SICURITE DU BOYLER SICHERHEITZUNG
S2	TERMOSTATO SICUREZZA VASCA SAFETY TANK HEATER THERMOSTAT	THERMOSTAT DE SICURITE CUVE SICHERHEITS– TANKTHERMOSTAT
R3	RESISTENZA VASCA LAVAGGIO WASH TANK HEATING ELEMENT	RESISTANCE CUVE DE LAVAGE WASCHTANKHEIZUNG
R1	RESISTENZA BOILER BOOSTER HEATER HEATING ELEMENT	RESISTANCE BOYLER BOILERHEIZUNG
M7	ELETTRODOSATORE TENSIOATTIVO EL. RINSEAID INJECTOR	DOSEUR EL. PRODUIT RINCAGE NACHSPUELMITTELDOSIERGERAET
M6	ELETTROPOMPA DI SCARICO DRAIN PUMP	MOTEUR POMPE VIDANGE MOTOR LAUGENPUMPE
M2	ELETTROPOMPA AUMENTO PRESSIONE RINSE BOOSTER PUMP	ELECTROPOMPE AUGMENT PRESSION DRUCKSTEIGERUNGSPUMPE
M5	ELETTRODOSATORE DETERSIVO EL. DETERGENT INJECTOR	DOSEUR EL. DETERGENT SPUEL MITTELDOSIERGERAET
M1	ELETTROPOMPA LAVAGGIO WASH ELECTRIC PUMP	ELECTROPOMPE LAVAGE ELEKTRISCHE UMAELZPUMPE
KR3	TELERUTTORE SICUREZZA RESISTENZA BOILER SAFETY BOOSTER HEATER CONTACTOR	CONTACTEUR RESISTANCE BOYLER LUFTSCHUETZ F. BOILERHEITZUNG
KR2	TELERUTTORE RESISTENZA VASCA TANK HEATER CONTACTOR	
KR1	TELERUTTORE RESISTENZA BOILER BOOSTER HEATER CONTACTOR	CONTACTEUR RESISTANCE BOYLER LUFTSCHUETZ F. BOILERHEITZUNG
KM1	TELERUTTORE ELETTROPOMPA LAVAGGIO WASCH PUMP CONTACTEUR	CONTACTEUR ELECTROPOMPE LAVAGE SCHUETZ F. UMWAELPUMPE
Y1	ELETTROVALVOLA RISCIACQUO RINSE SOLENOID VALVE	ELECTROVANNE DE RINCAGE MAGNETVENT FUER NACHSPUELUNG
F:... FT1/2/3	FUSIBILE FEUSES	
E2	SONDA CONTROLLO VASCA PROBE TANK HEATER	THERMOSTAT RESISTANCE CUVE THANKHEIZUNGTHERMOSTAT
E1	SONDA CONTROLLO BOILER BOOSTER HEATER THERMOSTAT	THERMOSTAT RESISTANCE BOYLER BOILERHEIZUNG
C1/C2	CONDESATORE CAPACITOUR	
B16	PRESSOSTATO LIVELLO BOILER BOILER PRESSURE SWITCH	PRESSOSTAT NIVEAU SURCHAUFFER NACHSPULBOILER NIVEAUSCHALTER
B18	CONTROLLO LIVELLO BRILLANTANTE RINSE AID CONTROL LEVEL	CONTROLE NIVEAU PRODUIT DE RINCAGE STUFE GLANZMITTEL
B12	CONTROLLO LIVELLO DETERGENTE DETERGENT LEVEL	CONTROLE NIVEAU DETERGENT SPULMITTELNIVEAUSCHALTER
B10	PRESSOSTATO LIVELLO VASCA TANK PRESSURE SWITCH	PRESSOSTAT NIVEAU AIRGAP TANKDRUCKSCHALTER–NIVEAUREGLER
A1/A2/A3	SCHEDA CONTROLLO ELECTRONIC CONTROL UNIT	FICHE DE CONTROLEELECTRONIQUE ELEKTRONISCHE BEDIENUNGSKARTE
SIMB.	DESCRIZIONE DESCRIPTION	DESCRIPTION BESCHREIBUNG

	DESCRIZIONE	SOSTITUISCE	DATA
-1	Aggiunta possibilità di coll monofase	82137	16/11/09

code Machine		denomination	Code
re-examined	date 22/10/07	WIRING DIAGRAMM	
inspected by	date	Dishwashers	n°/file 82137 mod -1
validated by	date	total blat 3 / N° blat 1 / Next blat -2	