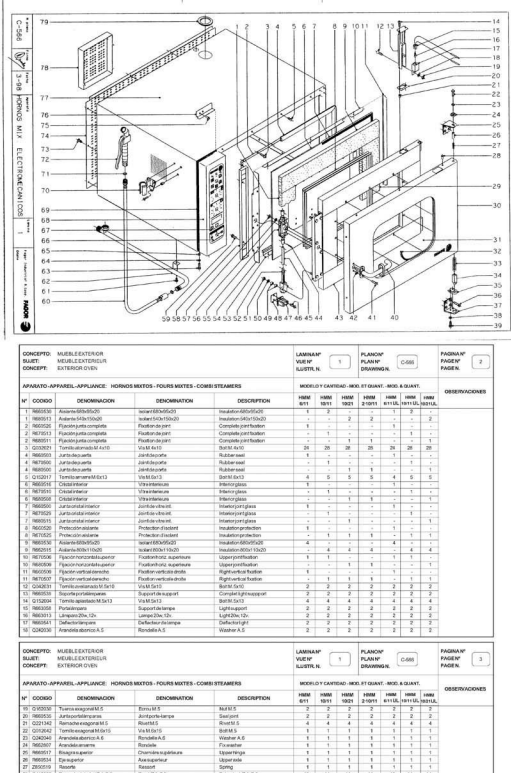


**CONCEPTO:** MUEBLE EXTERIOR
**SUJET:** MEUBLE EXTERIEUR
**CONCEPT:** EXTERIOR OVEN

**LAMINA Nº**
**VUE Nº** 1
**ILUSTR. N.**

**PLANO Nº** C-566
**PLAN Nº**
**DRAWING N.**

**PAGINA Nº** 2
**PAGINA Nº**
**PAGEN.**

**APARATO - APPAREIL - APPLIANCE: HORNOS MIXTOS - FOURS MIXTES - COMBI STEAMERS**

MODELO Y CANTIDAD - MOD. ET QUANT. - MOD. & QUANT.

| Nº | CODIGO | DENOMINACION | DENOMINATION | DESCRIPTION | HMM 6/11 | HMM 10/11 | HMM 10/21 | HMM 2-10/11 | HMM 6111/E, 10111/E, 10211/E, | HMM 2-10/11 | OBSERVACIONES |
|---|---|---|---|---|---|---|---|---|---|---|---|
| 1 | R650530 | Asiento 680x505x20 | Isolant 680x505x20 | Insulation 680x505x20 | 1 | 2 | - | - | - | 2 | - |
| 2 | R650513 | Asiento 540x150x20 | Isolant 540x150x20 | Insulation 540x150x20 | - | - | 2 | 2 | 2 | - | 2 |
| 3 | R650526 | Fijación junta completa | Fixation de joint | Complete joint fixation | 1 | - | - | - | - | - | - |
| 4 | R650527 | Fijación junta completa | Fixation de joint | Complete joint fixation | - | - | - | - | 1 | - | - |
| 5 | R650511 | Fijación junta completa | Fixation de joint | Complete joint fixation | - | - | 1 | 1 | - | - | 1 |
| 6 | Q330521 | Tornillo atornillador 4x16 | Vis M.4x16 | Bolt M.4x16 | 28 | 28 | 28 | 28 | 28 | 28 | 28 |
| 7 | R650503 | Junta de puerta | Joint de porte | Rubber seal | 1 | - | - | - | - | - | - |
| 8 | R675500 | Junta de puerta | Joint de porte | Rubber seal | - | 1 | - | - | - | 1 | - |
| 9 | R650502 | Junta de puerta | Joint de porte | Rubber seal | - | - | 1 | 1 | 1 | - | 1 |
| 10 | R650501 | Tornillo atornillador 6,3x13 | Vis M.6,3x13 | Bolt M.6,3x13 | 4 | 5 | 5 | 5 | 4 | 5 | 5 |
| 11 | R650502 | Cristal interior | Vitre intérieure | Interior glass | 1 | - | - | - | - | - | - |
| 12 | R675501 | Cristal interior | Vitre intérieure | Interior glass | - | 1 | - | - | - | 1 | - |
| 13 | R650508 | Cristal interior | Vitre intérieure | Interior glass | - | - | 1 | 1 | 1 | - | 1 |
| 14 | R650500 | Junta cristal interior | Joint de vitre int. | Interior joint glass | 1 | - | - | - | 1 | - | - |
| 15 | R675502 | Junta cristal interior | Joint de vitre int. | Interior joint glass | - | 1 | - | - | - | 1 | - |
| 16 | R650501 | Junta cristal interior | Joint de vitre int. | Interior joint glass | - | - | 1 | 1 | - | - | 1 |
| 17 | R650526 | Protección aislante | Protection d'isolant | Insulation protection | 1 | 1 | 1 | 1 | 1 | 1 | 1 |
| 18 | R675525 | Protección aislante | Protection d'isolant | Insulation protection | 1 | - | 1 | 1 | - | 1 | 1 |
| 19 | R650530 | Aislante 680x505x20 | Isolant 680x505x20 | Insulation 680x505x20 | 4 | - | - | - | - | - | - |
| 20 | R662515 | Aislante 800x110x20 | Isolant 800x110x20 | Insulation 800x110x20 | - | 4 | 4 | 4 | - | 4 | 4 |
| 21 | R671004 | Fijación horizontal superior | Fixation horiz. supérieure | Upper joint fixation | 1 | - | - | - | - | - | - |
| 22 | R650539 | Fijación horizontal superior | Fixation horiz. supérieure | Upper joint fixation | - | - | 1 | 1 | - | - | 1 |
| 23 | R650506 | Fijación vertical derecha | Fixation verticale droite | Right vertical fixation | 1 | - | - | - | - | - | - |
| 24 | R675507 | Fijación vertical derecha | Fixation verticale droite | Right vertical fixation | - | 1 | 1 | 1 | 1 | 1 | 1 |
| 25 | Q340531 | Tornillo atornillador M.5x10 | Vis M.5x10 | Bolt M.5x10 | 2 | 2 | 2 | 2 | 2 | 2 | 2 |
| 26 | R650533 | Soporte portabisagras | Support de support | Complet light support | 2 | 2 | 2 | 2 | 2 | 2 | 2 |
| 27 | Q150524 | Tornillo apoyo M.5x13 | Vis M.5x13 | Bolt M.5x13 | 4 | 4 | 4 | 4 | 4 | 4 | 4 |
| 28 | R663568 | Portalámpara | Support de lampe | Light support | 2 | 2 | 2 | 2 | 2 | 2 | 2 |
| 29 | R663513 | Lampara 25w. 12v. | Lampe 25w. 12v. | Light 25w. 12v. | 2 | 2 | 2 | 2 | 2 | 2 | 2 |
| 30 | R650561 | Deflector lámparas | Deflecteur de lampe | Deflector light | 2 | 2 | 2 | 2 | 2 | 2 | 2 |
| 31 | Q340530 | Arandela abonico A.5 | Rondelle A.5 | Washer A.5 | 2 | 2 | 2 | 2 | 2 | 2 | 2 |

**CONCEPTO:** MUEBLE EXTERIOR
**SUJET:** MEUBLE EXTERIEUR
**CONCEPT:** EXTERIOR OVEN

**LAMINA Nº**
**VUE Nº** 1
**ILUSTR. N.**

**PLANO Nº** C-566
**PLAN Nº**
**DRAWING N.**

**PAGINA Nº** 3
**PAGINA Nº**
**PAGEN.**

**APARATO - APPAREIL - APPLIANCE: HORNOS MIXTOS - FOURS MIXTES - COMBI STEAMERS**

MODELO Y CANTIDAD - MOD. ET QUANT. - MOD. & QUANT.

| Nº | CODIGO | DENOMINACION | DENOMINATION | DESCRIPTION | HMM 6/11 | HMM 10/11 | HMM 10/21 | HMM 2-10/11 | HMM 6111/E, 10111/E, 10211/E, | HMM 2-10/11 | OBSERVACIONES |
|---|---|---|---|---|---|---|---|---|---|---|---|
| 32 | Q150530 | Tuerca exagonal M.5 | Ecrou M.5 | Nut M.5 | 2 | 2 | 2 | 2 | 2 | 2 | 2 |
| 33 | R650530 | Junta portalámparas | Joint porte-lampe | Seal joint | 2 | 2 | 2 | 2 | 2 | 2 | 2 |
| 34 | Q331542 | Tornillo avellanado M.4x16 | Vis M.4x16 | Bolt M.4x16 | 4 | 4 | 4 | 4 | 4 | 4 | 4 |
| 35 | Q310542 | Tornillo exagonal M.6x16 | Vis M.6x16 | Bolt M.5 | 1 | 1 | 1 | 1 | 1 | 1 | 1 |
| 36 | Q340544 | Arandela abonico A.6 | Rondelle A.6 | Washer A.6 | 1 | 1 | 1 | 1 | 1 | 1 | 1 |
| 37 | R652507 | Arandela cerrante | Rondelle | Fix washer | 1 | 1 | 1 | 1 | 1 | 1 | 1 |
| 38 | R660517 | Tornillo + arandel | Chamnière supérieure | Upper hinge | 1 | 1 | 1 | 1 | 1 | 1 | 1 |
| 39 | R660534 | Eje superior | Axe superieur | Upper axle | 1 | 1 | 1 | 1 | 1 | 1 | 1 |
| 40 | Z650519 | Resorte | Ressort | Spring | 1 | 1 | 1 | 1 | 1 | 1 | 1 |
| 41 | Q112032 | Remache tubular Ø 4x7,5 | Rivet Ø 4x7,5 | Tube rivet Ø 4x7,5 | 10 | 14 | 14 | 14 | 10 | 14 | 14 |
| 42 | R650529 | Aislante 540x330x20 | Isolant 540x330x20 | Insulation 540x330x20 | 2 | 2 | - | - | - | - | - |
| 43 | R650514 | Aislante 540x180x20 | Isolant 540x180x20 | Insulation 540x180x20 | - | - | 2 | 2 | - | - | 2 |
| 44 | R650525 | Puerta | Porte | Door | 1 | - | - | - | - | - | - |
| 45 | R675515 | Puerta | Porte | Door | - | 1 | - | - | - | - | - |
| 46 | R650505 | Puerta | Porte | Door | - | - | 1 | 1 | - | - | - |
| 47 | R650535 | Puerta | Porte | Door | - | - | - | - | 1 | - | - |
| 48 | R675512 | Puerta | Porte | Door | - | - | - | - | - | 1 | - |
| 49 | R650516 | Puerta | Porte | Door | - | - | - | - | - | - | 1 |
| 50 | R650513 | Cristal exterior | Vitre extérieure | Exterior glass | 1 | - | - | - | 1 | - | - |
| 51 | R675504 | Cristal exterior | Vitre extérieure | Exterior glass | - | 1 | - | - | - | 1 | - |
| 52 | R650501 | Junta cristal exterior | Joint de vitre | Exterior joint glass | 1 | - | - | - | 1 | - | - |
| 53 | R675520 | Junta cristal exterior | Joint de vitre | Exterior joint glass | - | 1 | 1 | 1 | - | 1 | 1 |
| 54 | R613511 | Muelle | Ressort | Spring | 1 | 1 | 1 | 1 | 1 | 1 | 1 |
| 55 | R660554 | Eje inferior | Axe inferieur | Lower axle | 1 | 1 | 1 | 1 | 1 | 1 | 1 |
| 56 | R660531 | Guía eje inferior | Guide d axe inferieur | Inferior axle guide | 1 | 1 | 1 | 1 | 1 | 1 | 1 |
| 57 | Q150513 | Tornillo allen M.5x16 | Vis M.5x16 | Allen Bolt M.5x16 | 8 | 8 | 8 | 8 | 8 | 8 | 8 |
| 58 | R650507 | Bisagra inferior | Charnière inférieure | Lower hinge | 1 | 1 | 1 | 1 | 1 | 1 | 1 |
| 59 | Q340531 | Arandela abonico A.5 | Rondelle A.5 | Washer A.5 | 2 | 2 | 2 | 2 | 2 | 2 | 2 |
| 60 | Q150542 | Tornillo exagonal M.6x15 | Vis M.6x15 | Bolt M.6x15 | 2 | 2 | 2 | 2 | 2 | 2 | 2 |
| 61 | R660512 | Tornillo cabeza | Tête de vis | Complete handle | 1 | 1 | 1 | 1 | 1 | 1 | 1 |
| 62 | Q340532 | Tornillo avellanado M.5x15 | Vis M.5x15 | Bolt M.5x15 | 2 | 2 | 2 | 2 | 2 | 2 | 2 |

**CONCEPTO:** MUEBLE EXTERIOR
**SUJET:** MEUBLE EXTERIEUR
**CONCEPT:** EXTERIOR OVEN

**LAMINA Nº**
**VUE Nº** 1
**ILUSTR. N.**

**PLANO Nº** C-566
**PLAN Nº**
**DRAWING N.**

**PAGINA Nº** 4
**PAGINA Nº**
**PAGEN.**

**APARATO - APPAREIL - APPLIANCE: HORNOS MIXTOS - FOURS MIXTES - COMBI STEAMERS**

MODELO Y CANTIDAD - MOD. ET QUANT. - MOD. & QUANT.

| Nº | CODIGO | DENOMINACION | DENOMINATION | DESCRIPTION | HMM 6/11 | HMM 10/11 | HMM 10/21 | HMM 2-10/11 | HMM 6111/E, 10111/E, 10211/E, | HMM 2-10/11 | OBSERVACIONES |
|---|---|---|---|---|---|---|---|---|---|---|---|
| 63 | Q331542 | Tornillo exagonal M.5 | Ecrou M.5 | Nut M.5 | 1 | 1 | 1 | 1 | 1 | 1 | 1 |
| 64 | R660511 | Bastidor de puerta | Châssis de porte | Door frame | 1 | - | - | - | 1 | - | - |
| 65 | R675505 | Bastidor de puerta | Châssis de porte | Door frame | - | 1 | - | - | - | 1 | - |
| 66 | R650503 | Bastidor de puerta | Châssis de porte | Door frame | - | - | 1 | 1 | - | - | 1 |
| 67 | Q370531 | Tornillo de chapa 2x15 | Tige | Pin 2x15 | 2 | 2 | 2 | 2 | 2 | 2 | 2 |
| 68 | R650502 | Alargadera | Elongateur | Rod | - | 2 | 2 | 2 | - | 2 | 2 |
| 69 | Q310544 | Tornillo allen M.5x16 | Vis M.5x16 | Allen bolt M.5x16 | 4 | 4 | 4 | 4 | 4 | 4 | 4 |
| 70 | R650545 | Engancha | Crochet | Hooking | 2 | 2 | 2 | 2 | 2 | 2 | 2 |
| 71 | R650546 | Soporte de enganche | Supplement | Support | 4 | 4 | 4 | 4 | 4 | 4 | 4 |
| 72 | Z650510 | Casquillo | Douille | Bush | 8 | 8 | 8 | 8 | 8 | 8 | 8 |
| 73 | Q340531 | Arandela abonico A.6 | Rondelle A.6 | Washer A.6 | 4 | 4 | 4 | 4 | 4 | 4 | 4 |
| 74 | Q150540 | Tuerca exagonal M.6 | Ecrou M.6 | Nut M.6 | 4 | 4 | 4 | 4 | 4 | 4 | 4 |
| 75 | R650544 | Elemento de cierre | Tige de fermeture | Closing part | 2 | 2 | 2 | 2 | 2 | 2 | 2 |
| 76 | R675516 | Fijación horizontal inferior | Fixation horiz. inférieur | Lower horizontal fixation | 1 | - | - | - | - | - | - |
| 77 | R650510 | Fijación horizontal inferior | Fixation horiz. inférieur | Lower horizontal fixation | - | 1 | 1 | 1 | - | 1 | 1 |
| 78 | R650504 | Fijación vertical izquierda | Fixation verticale gauche | Left fastening | 1 | - | - | - | 1 | - | - |
| 79 | R675508 | Fijación vertical izquierda | Fixation verticale gauche | Left fastening | - | 1 | 1 | 1 | - | 1 | 1 |
| 80 | R650504 | Mecanismo de cierre | Element de fermeture | Closing element | 1 | 1 | 1 | 1 | 1 | 1 | 1 |
| 81 | Q340540 | Arandela abonico A.6 | Rondelle A.6 | Washer A.6 | 2 | 2 | 2 | 2 | 2 | 2 | 2 |
| 82 | Q150540 | Tornillo exagonal M.6 | Ecrou M.6 | Nut M.6 | 2 | 2 | 2 | 2 | 2 | 2 | 2 |
| 83 | R650528 | Tapa de ducha flexible | Tuyau flexible de douchette | Shower flexible hose | 1 | 1 | 1 | 1 | 1 | 1 | 1 |
| 84 | Q310542 | Tornillo exagonal M.6x15 | Vis M.6x15 | Bolt M.6x15 | 1 | - | - | - | 1 | 1 | 1 |
| 85 | R675502 | Suplemento de ducha | Supplement de douchette | Shower supplement | - | 1 | - | - | - | - | - |
| 86 | R650508 | Suplemento de ducha | Supplement de douchette | Shower supplement | - | - | 1 | 1 | - | - | - |
| 87 | Q340542 | Tornillo allen M.5x15 | Vis M.5x15 | Bolt M.5x15 | 10 | 10 | 16 | 13 | 10 | 16 | 13 |
| 88 | Q340540 | Arandela nuelle A.6 | Rondelle A.6 | Washer A.6 | 10 | 10 | 16 | 13 | 10 | 16 | 13 |
| 89 | Q331543 | Tornillo exagonal M.6 | Rivet M.6 | Bolt M.6 | 10 | 10 | 16 | 13 | 10 | 16 | 13 |
| 90 | Q330540 | Arandela plana A.6 | Rondelle A.6 | Washer A.6 | 10 | 10 | 16 | 13 | 10 | 16 | 13 |

**CONCEPTO:** MUEBLE EXTERIOR
**SUJET:** MEUBLE EXTERIEUR
**CONCEPT:** EXTERIOR OVEN

**LAMINA Nº**
**VUE Nº** 1
**ILUSTR. N.**

**PLANO Nº** C-566
**PLAN Nº**
**DRAWING N.**

**PAGINA Nº** 5
**PAGINA Nº**
**PAGEN.**

**APARATO - APPAREIL - APPLIANCE: HORNOS MIXTOS - FOURS MIXTES - COMBI STEAMERS**

MODELO Y CANTIDAD - MOD. ET QUANT. - MOD. & QUANT.

| Nº | CODIGO | DENOMINACION | DENOMINATION | DESCRIPTION | HMM 6/11 | HMM 10/11 | HMM 10/21 | HMM 2-10/11 | HMM 6111/E, 10111/E, 10211/E, | HMM 2-10/11 | OBSERVACIONES |
|---|---|---|---|---|---|---|---|---|---|---|---|
| 66 | R663514 | Sangre/Tubo inferior (mazda) | Adhesif nautre | Polycarbonate film | 1 | - | - | - | - | - | - |
| 67 | R663550 | Sangre/Tubo inferior (programador) | Adhesif nautre programmateur | Polycarbonate film | - | 1 | - | - | - | - | - |
| 68 | R663557 | Sangre/Tubo inferior (mazda) | Adhesif nautre | Polycarbonate film | - | - | 1 | - | 1 | - | - |
| 69 | R663531 | Sangre/Tubo inferior | Adhesif nautre | Polycarbonate film | - | - | - | 1 | - | 1 | - |
| 70 | R743012 | Sangre/Tubo superior (combinador) | Adhesif de commandes | Polycarbonate film | 1 | 1 | 1 | 1 | - | - | - |
| 71 | R743026 | Sangre/Tubo superior | Adhesif | Polycarbonate film | - | - | - | - | 1 | 1 | 1 |
| 72 | R742560 | Panel/p.interiores | Panneau de commandes | Control panel | 1 | - | - | - | 1 | - | - |
| 73 | R752560 | Panel/p.interiores | Panneau de commandes | Control panel | - | 1 | - | - | - | 1 | - |
| 74 | R332609 | Junta de panel/mandos | Joint panneau de commande | Seal control panel | 1 | 1 | 1 | 1 | 1 | 1 | 1 |
| 75 | R650507 | Soporte luz de ducha | Support | Support | - | - | - | - | 1 | 1 | 1 |
| 76 | Q150513 | Tornillo avellanado M.4x15 | Vis M.4x15 | Bolt M.4x15 | - | - | - | - | 3 | 3 | 3 |
| 77 | Q331541 | Remache exagonal M.4 | Rivet M.4 | Rivet M.4 | - | - | - | - | 3 | 3 | 3 |
| 78 | | Arandela junta (con cuerpo) | Rondelle | Washer | - | - | - | - | 2 | 2 | 2 |
| 79 | R650545 | Cuerpo de ducha | Douchette | Shower | - | - | - | - | 1 | 1 | 1 |
| 80 | Q150504 | Tornillo apoyo bot. M.5x13 | Vis M.5x13 | Bolt M.5x13 | 12 | 14 | 14 | 14 | 12 | 14 | 14 |
| 81 | R662503 | Panel p.exterior | Panneau p.extérieur | Rear panel | 1 | - | - | - | - | - | - |
| 82 | R672606 | Panel p.exterior | Panneau p.extérieur | Rear panel | - | 1 | - | - | 1 | - | - |
| 83 | R662502 | Panel p.exterior | Panneau p.extérieur | Rear panel | - | - | 1 | 1 | - | 1 | 1 |
| 84 | Q410532 | Remache tubular Ø 4x7,5 | Rivet Ø 4x7,5 | Rivet Ø 4x7,5 | 2 | 2 | 2 | 2 | 2 | 2 | 2 |
| 85 | R662511 | Tapa inferior posterior | Couvercle p.p.inferieur | Cont.p.rear.fixation | 1 | 1 | 1 | 1 | 1 | 1 | 1 |
| 86 | R662512 | Cuerpo exterior | Bâ?te extérieure | Exterior cover | 1 | - | - | - | 1 | - | - |
| 87 | R672610 | Cuerpo exterior | Bâ?te extérieure | Exterior cover | - | 1 | - | - | - | 1 | - |
| 88 | R662510 | Cuerpo exterior | Bâ?te extérieure | Exterior cover | - | - | 1 | 1 | - | - | 1 |
| 89 | R662638 | Tapa ventilador motor | Couvercle de turbine | Motor cover | 1 | 1 | 1 | 1 | 1 | 1 | 1 |
| 90 | R342611 | Pasamanos de chimenea | Jambage cheminée | Chimney protection | 1 | 1 | 1 | 1 | 1 | 1 | 1 |

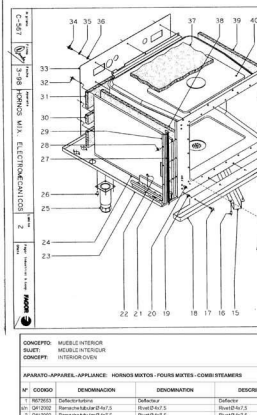


**CONCEPTO:** MUEBLE INTERIOR
**SUJET:** MEUBLE INTERIEUR
**CONCEPT:** INTERIOR OVEN

**LAMINA Nº / VUE Nº / ILUSTR. Nº:** 2
**PLANO Nº / PLAN Nº / DRAWING Nº:** C-557
**PAGINA Nº / PAGEN° / PAGE Nº:** 7

**APARATO–APPAREIL–APPLIANCE: HORNOS MIXTOS - FOURS MIXTES - COMBI STEAMERS**

MODELO Y CANTIDAD - MOD. ET QUANT. - MOD. & QUANT.

| Nº | CODIGO | DENOMINACION | DENOMINATION | DESCRIPTION | HMM 6/11 | HMM 10/11 | HMM 10/21 | HMM 21/011 | HMM 6/11GL | HMM 10/11 GL | HMM 10/21 GL | OBSERVACIONES |
|---|---|---|---|---|---|---|---|---|---|---|---|---|
| 1 | R6039653 | Deflector turbina | Deflecteur | Deflector | - | - | 1 | 1 | - | - | - | |
| s/n | Q412092 | Remache tubular Ø 4x7,5 | Rivet Ø 4x7,5 | Rivet Ø 4x7,5 | - | - | 6 | 6 | - | - | 6 | |
| 2 | Q412092 | Remache tubular Ø 4x7,5 | Rivet Ø 4x7,5 | Rivet Ø 4x7,5 | 4 | 4 | 4 | 4 | 4 | 4 | 4 | |
| 3 | R292047 | Escuadra sujeción sobremantador | Equerre de couverde | Fixation steel angle | 2 | 2 | 2 | 2 | 2 | 2 | 2 | |
| 4 | Q412092 | Remache tubular Ø 4x7,5 | Rivet Ø 4x7,5 | Rivet Ø 4x7,5 | 6 | - | - | - | 6 | - | - | |
| 5 | R662648 | Abertin derecho | Deflecteur droit | Right deflector | 1 | - | - | - | 1 | - | - | |
| s/n | R662647 | Abertin izquierdo | Deflecteur gauche | Left deflector | 1 | - | - | - | 1 | - | - | |
| 6 | Q412092 | Remache tubular Ø 4x7,5 | Rivet Ø 4x7,5 | Tube rivet Ø 4x7,5 | - | - | 6 | 6 | - | - | 6 | |
| 7 | R732015 | Soporte lateral | Soporte lateral | Side deflector | - | - | 2 | 2 | - | - | 2 | |
| 8 | R662596 | Cubre ventilador | Couvercle de turbine | Fan protector | 1 | - | - | - | 1 | - | - | |
| 9 | R662597 | Cubre ventilador | Couvercle de turbine | Fan protector | - | 1 | - | - | - | 1 | - | |
| 10 | R662598 | Cubre ventilador | Couvercle de turbine | Fan protector | - | - | 1 | 1 | - | - | 1 | |
| 11 | Q412092 | Remache tubular Ø 4x7,5 | Rivet Ø 4x7,5 | Tube rivet Ø 4x7,5 | 6 | 6 | 6 | 6 | 6 | 6 | 6 | |
| 12 | R662648 | Guia de bandeja derecha | Glissière droite | Right tray guide | 1 | - | - | - | 1 | - | - | |
| s/n | R662645 | Guia de bandeja izquierda | Glissière gauche | Left tray guide | 1 | - | - | - | 1 | - | - | |
| 13 | R662646 | Guia de bandejas derecha | Glissière droite | Right tray guide | - | 1 | - | - | - | 1 | - | |
| s/n | R662645 | Guia de bandejas izquierda | Glissière gauche | Left tray guide | - | 1 | - | - | - | 1 | - | |
| 14 | R662654 | Guia de bandejas derecha | Glissière droite | Right tray guide | - | - | 1 | - | - | - | - | |
| s/n | R662655 | Guia de bandejas izquierda | Glissière gauche | Left tray guide | - | - | 1 | - | - | - | - | |
| 15 | R662643 | Guia de bandejas | Glissière | Tray guide | - | - | - | - | - | - | 2 | |
| 16 | R252916 | Bandeja 1/1 (530x326x20) | Plateau 1/1 (530x326x20) | Tray GN 1/1 | 1 | 1 | 1 | 1 | - | - | - | |
| 17 | R032956 | Bandeja 2/1 (530x650x40) | Plateau 2/1 (530x650x40) | Tray GN 2/1 | - | 1 | - | - | - | - | - | |
| 18 | R342676 | Parrilla 1/1 | Grille 1/1 | Grid GN 1/1 | 1 | 1 | 1 | 1 | 2 | 2 | - | |
| 19 | R032958 | Parrilla 2/1 | Grille 2/1 | Grid GN 2/1 | - | - | - | - | - | - | - | |
| 20 | R662641 | Parrilla 2/1 | Grille 2/1 | Grid GN 2/1 | - | - | - | - | - | - | 5 | |
| 21 | R662617 | Remache tubular Ø 4x7,5 | Antiremache | Front cf filter | - | - | - | - | 1 | - | - | |
| 13 | R672635 | Anterior del filtro | Antérieur du filtre | Front cf filter | - | 1 | 1 | 1 | - | 1 | 1 | |
| 14 | R672632 | Posterior de filtro | Postérieur du filtre | Rear cf filter | - | - | - | - | - | - | - | |
| 15 | R672638 | Posterior de filtro | Postérieur du filtre | Rear cf filter | - | 1 | 1 | 1 | - | 1 | 1 | |
| 22 | R662664 | Cubre desagüe | Couvercle de vidange | Drainer cover | 1 | - | - | - | 1 | - | - | |
| 15 | R662665 | Cubre desagüe | Couvercle de vidange | Drainer cover | - | 1 | 1 | 1 | - | 1 | 1 | |
| 16 | Q412092 | Remache tubular Ø 4x7,5 | Rivet Ø 4x7,5 | Rivet Ø 4x7,5 | 8 | 8 | 8 | 8 | 8 | 8 | 8 | |

**CONCEPTO:** MUEBLE INTERIOR
**SUJET:** MEUBLE INTERIEUR
**CONCEPT:** INTERIOR OVEN

**LAMINA Nº / VUE Nº / ILUSTR. Nº:** 2
**PLANO Nº / PLAN Nº / DRAWING Nº:** C-557
**PAGINA Nº / PAGEN° / PAGE Nº:** 8

**APARATO–APPAREIL–APPLIANCE: HORNOS MIXTOS - FOURS MIXTES - COMBI STEAMERS**

MODELO Y CANTIDAD - MOD. ET QUANT. - MOD. & QUANT.

| Nº | CODIGO | DENOMINACION | DENOMINATION | DESCRIPTION | HMM 6/11 | HMM 10/11 | HMM 10/21 | HMM 21/011 | HMM 6/11GL | HMM 10/11 GL | HMM 10/21 GL | OBSERVACIONES |
|---|---|---|---|---|---|---|---|---|---|---|---|---|
| 17 | Q120017 | Tornillo arandela M 6x13 | Vis M 6x13 | Bolt M 6x13 | 4 | 4 | 4 | 4 | 4 | 4 | 4 | |
| 18 | R672639 | Eyector | Ejecteur | Drip collector | 1 | 1 | 1 | 1 | 1 | 1 | 1 | |
| 19 | R682693 | Recoge aguas | Ejecteur | Drip collector | - | - | 1 | 1 | - | - | 1 | |
| 20 | Q321143 | Remache exagonal M 5 | Rivet M 5 | Rivet M 5 | 4 | 4 | 4 | 4 | 4 | 4 | 4 | |
| 21 | Q321142 | Remache exagonal M 5 | Rivet M 5 | Rivet M 5 | 12 | 12 | 12 | 12 | 12 | 12 | 12 | |
| 22 | R342621 | Guia del cuadro electrico | Guide | Electric box guide | 1 | 1 | 1 | 1 | 1 | 1 | 1 | |
| 23 | Q412092 | Remache tubular Ø 4x7,5 | Rivet Ø 4x7,5 | Rivet Ø 4x7,5 | 8 | 8 | 8 | 8 | 8 | 8 | 8 | |
| 23 | R672630 | Base anterior de horno | Panneau inférieur | Oven base | - | 1 | - | - | - | 1 | - | |
| 24 | R672630 | Base anterior de horno | Panneau inférieur | Oven base | 1 | - | - | - | 1 | - | - | |
| 24 | R682630 | Base anterior de horno | Panneau inférieur | Oven base | - | - | 1 | 1 | - | - | 1 | |
| 24 | R662656 | Soporte lateral anterior | Support latéral avant | Lateral insulation support | 1 | - | - | - | 1 | - | - | |
| 24 | R672616 | Soporte lateral anterior | Support latéral avant | Lateral insulation support | - | 1 | - | - | - | 1 | - | |
| 24 | R662657 | Soporte lateral anterior | Support latéral avant | Lateral insulation support | - | - | 1 | 1 | - | - | 1 | |
| 25 | X290150 | Pata regulable | Pied réglable | Adjustable leg | 4 | 4 | 4 | 4 | 4 | 4 | 4 | |
| 26 | Q411534 | Remache tubular Ø 4,8 | Rivet Ø 4,8 | Rivet Ø 4,8 | 16 | 16 | 16 | 16 | 16 | 16 | 16 | |
| 27 | Y032809 | Junta de puerta cristal | Joint tuyau passage du comminuteur | Control panel joint | 1 | 1 | 1 | 1 | 1 | 1 | 1 | |
| 28 | Q412092 | Remache tubular Ø 4x7,5 | Rivet Ø 4x7,5 | Rivet Ø 4x7,5 | 3 | 3 | 3 | 3 | 3 | 3 | 3 | |
| 29 | R662607 | Protector de portamandos | Protection | Control panel protector | 1 | - | - | - | 1 | - | - | |
| 30 | R672624 | Protector de portamandos | Protection | Control panel protector | - | 1 | - | - | - | 1 | - | |
| 31 | R662618 | Asiento posterior 560x50x20 | Isolant 560x50x20 | Rear insulation 560x50x20 | 3 | 3 | 3 | 3 | 3 | 3 | 3 | |
| 32 | R662631 | Asiento posterior 600x110x20 | Isolant 600x110x20 | Rear insulation 600x110x20 | 2 | - | - | - | 2 | - | - | |
| 33 | R672631 | Asiento posterior 670x230x20 | Isolant 670x230x20 | Rear insulation 670x230x20 | - | 2 | 2 | 2 | - | 2 | 2 | |
| 34 | Q101004 | Tornillo bomba | Vis | Bolt | 3 | 3 | 3 | 3 | 3 | 3 | 3 | |
| 35 | R662665 | Soporte aislante posterior | Support isolant posterieur | Rear insulation support | 1 | - | - | - | 1 | - | - | |
| 36 | R672629 | Soporte aislante posterior | Support isolant posterieur | Rear insulation support | - | 1 | - | - | - | 1 | - | |
| 36 | R682696 | Soporte aislante posterior | Support isolant posterieur | Rear insulation support | - | - | 1 | 1 | - | - | 1 | |
| 36 | Q120421 | Tornillo exagonal M 6x13 | Vis M 6x13 | Bolt M 6x13 | 12 | 12 | 12 | 12 | 12 | 12 | 12 | |
| 37 | Q262040 | Arandela nueba A 6 | Rondelle A 6 | Washer A 6 | 12 | 12 | 12 | 12 | 12 | 12 | 12 | |
| 38 | Q332040 | Arandela dentada A 6 | Rondelle A 6 | Washer A 6 | 12 | 12 | 12 | 12 | 12 | 12 | 12 | |
| 39 | R662614 | Asi base y techo 650x650x20 | Revêtement latéral 650x650x20 | Base&ceiling&side 650x650x20 | 1 | 1 | - | - | 1 | 1 | - | |
| 37 | R662622 | Asi base y techo 600x790x20 | Isolant base et toit 600x790x20 | Base&ceiling&side 600x790x20 | - | - | 1 | 1 | - | - | 1 | |

**CONCEPTO:** MUEBLE INTERIOR
**SUJET:** MEUBLE INTERIEUR
**CONCEPT:** INTERIOR OVEN

**LAMINA Nº / VUE Nº / ILUSTR. Nº:** 2
**PLANO Nº / PLAN Nº / DRAWING Nº:** C-557
**PAGINA Nº / PAGEN° / PAGE Nº:** 9

**APARATO–APPAREIL–APPLIANCE: HORNOS MIXTOS - FOURS MIXTES - COMBI STEAMERS**

MODELO Y CANTIDAD - MOD. ET QUANT. - MOD. & QUANT.

| Nº | CODIGO | DENOMINACION | DENOMINATION | DESCRIPTION | HMM 6/11 | HMM 10/11 | HMM 10/21 | HMM 21/011 | HMM 6/11GL | HMM 10/11 GL | HMM 10/21 GL | OBSERVACIONES |
|---|---|---|---|---|---|---|---|---|---|---|---|---|
| 38 | R662613 | Asi cateral 650x535x20 | Isolant latéral 650x535x20 | Lateral insulation 650x535x20 | 1 | - | - | - | 1 | - | - | |
| 36 | R672630 | Asi cateral 770x650x20 | Isolant latéral 770x650x20 | Lateral insulation 770x650x20 | - | 2 | - | - | - | 2 | - | |
| 36 | R682624 | Asi cateral 860x770x20 | Isolant latéral 860x770x20 | Lateral insulation 860x770x20 | - | - | 2 | 2 | - | - | 2 | |
| 36 | R662613 | Asi cateral 650x535x20 | Isolant latéral 650x535x20 | Lateral insulation 650x535x20 | 2 | - | - | - | 2 | - | - | |
| 36 | R672630 | Asi cateral 770x650x20 | Isolant latéral 770x650x20 | Lateral insulation 770x650x20 | - | 2 | - | - | - | 2 | - | |
| 36 | R682624 | Asi cateral 860x770x20 | Isolant latéral 860x770x20 | Lateral insulation 860x770x20 | - | - | 2 | 2 | - | - | 2 | |
| 40 | R662653 | Cuerpo interior horno | Corps intérieur du four | Interior oven body | 1 | - | - | - | 1 | - | - | |
| 40 | R672620 | Cuerpo interior horno | Corps intérieur du four | Interior oven body | - | 1 | - | - | - | 1 | - | |
| 40 | R682650 | Cuerpo interior horno | Corps intérieur du four | Interior oven body | - | - | 1 | 1 | - | - | 1 | |
| 41 | Q321341 | Remache exagonal M 4 | Rivet M 4 | Hexagonal rivet M 4 | 24 | 26 | 26 | 26 | 24 | 26 | 26 | |
| 42 | R662651 | Cubre oblea | Bouchon intérieur | Wiring deflector | 1 | 1 | 1 | 1 | 1 | 1 | 1 | |
| 43 | Q262030 | Arandela plana A 5 | Rondelle A 5 | Washer A 5 | 2 | 2 | 2 | 2 | 2 | 2 | 2 | |
| 44 | Q120231 | Tornillo exagonal M 5x10 | Vis M 5x10 | Bolt M 5x10 | 2 | 2 | 2 | 2 | 2 | 2 | 2 | |

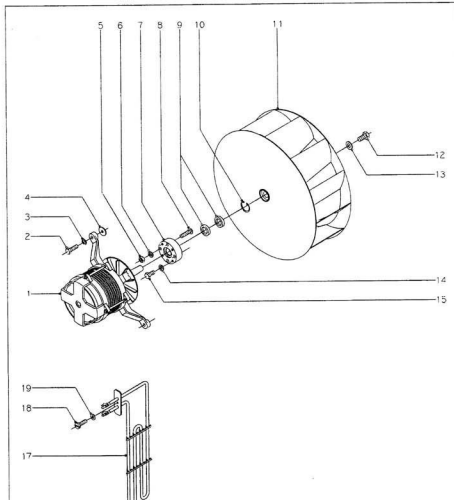


| N. di ord. | Firma | Fecha | Apparto | Lam.no | Fagor Industrial S.Coop | FAGOR |
|---|---|---|---|---|---|---|
| C-568 | | 3-98 | HORNOS MIX. ELECTROMECANICOS | 3 | Mare | |

| CONCEPTO: | CALENTAMIENTO Y TURBINA |
|---|---|
| SUJET: | CHAUFFAGE ET TOURBINE |
| CONCEPT: | HEATING AND MOTOR |

| LAMINA Nº | PLANON° | PAGINA N° |
|---|---|---|
| VUE Nº | PLANN° | PAGEN° |
| SJETTE N. | DRAWING N. | PAGEN: |
| 3 | C-568 | 11 |

APARATO-APPAREIL-APPLIANCE: HORNOS MIXTOS - FOURS MIXTES - COMBI STEAMERS

MODELO Y CANTIDAD - MOD. ET QUANT. - MOD. & QUANT.

| Nº | CODIGO | DENOMINACION | DENOMINATION | DESCRIPTION | HMM 6/11 | HMM 10/11 | HMM 10/21 | HMM 2-10/11 | HMM 6/11 UL | HMM 10/11 UL | HMM 10/21 UL | OBSERVACIONES |
|---|---|---|---|---|---|---|---|---|---|---|---|---|
| 1 | R253040 | Motor (230/400 V. 50-60 Hz) | Moteur (230/400 V. 50-60 Hz) | Motor (230/400 V. 50-60 Hz) | 1 | 1 | 1 | 1 | 1 | 1 | 1 | |
| 2 | Q312644 | Tornillo exagonal M 6x25 | Vis M 6x25 | Bolt M 6x25 | 4 | 4 | 4 | 4 | 4 | 4 | 4 | |
| 3 | Q322540 | Arandela muelle A.6 | Rondelle A.6 | Washer A.6 | 4 | 4 | 4 | 4 | 4 | 4 | 4 | |
| 4 | Q331464 | Arandela Ø 23x26,5x2 | Rondelle Ø 23x26,5x2 | Washer Ø 23x26,5x2 | 8 | 8 | 8 | 8 | 8 | 8 | 8 | |
| 5 | C162040 | Tuerca exagonal M 6 | Ecrou M 6 | NUT A.6 | 4 | 4 | 4 | 4 | 4 | 4 | 4 | |
| 6 | Q242043 | Arandela elastica A.6 | Rondelle A.6 | Washer A.6 | 4 | 4 | 4 | 4 | 4 | 4 | 4 | |
| 7 | R652023 | Casquillo redon | Douille | Capwasher | 1 | 1 | 1 | 1 | 1 | 1 | 1 | |
| 8 | | Perno M 6 (Calidad do acuerjo) | Tige M 6 (qualité) | Bolt M 6 ref.steel | 4 | 4 | 4 | 4 | 4 | 4 | 4 | |
| 9 | R622027 | Rotavar Ø 28x21,7x7 | Rotateur | Rotateur | 2 | 2 | 2 | 2 | 2 | 2 | 2 | |
| 10 | Q302023 | Anillo de seguridad Ø 28x1,2 | Anneau de sécurité Ø 28x1,2 | Safety ring Ø 28x1,2 | 1 | 1 | 1 | 1 | 1 | 1 | 1 | |
| 11 | R253042 | Turbina | Turbine | Turbine | 1 | 1 | 1 | 1 | 1 | 1 | 1 | |
| 12 | Q312663 | Tornillo exagonal M 10x30 | Vis M 10x30 | Bolt M 10x30 | 1 | 1 | 1 | 1 | 1 | 1 | 1 | |
| 13 | Q322566 | Arandela elastica A.10 | Rondelle A.10 | Washer A.10 | 1 | 1 | 1 | 1 | 1 | 1 | 1 | |
| 14 | Q242036 | Arandela elastica A.5 | Rondelle A.5 | Washer A.5 | 4 | 4 | 4 | 4 | 4 | 4 | 4 | |
| 15 | Q312630 | Tornillo exagonal M 5x10 | Vis M 5x10 | Bolt M 5x10 | 4 | 4 | 4 | 4 | 4 | 4 | 4 | |
| 16 | R633092 | Prensaestopas | Prétecteur de câblage | Compressor gland | 1 | 1 | 1 | 1 | 1 | 1 | 1 | |
| 17 | R623042 | Resistencia 1550 W. 230 V. | Resistance 1550 W. 230 V. | Element 1550 W. 230 V. | 6 | - | - | - | 6 | - | - | |
| 17 | R673092 | Resist. 1500+1500 W. 230 V. | Resist. 1500+1500 W. 230 V. | Element 1500+1500 W. 230 V. | - | 6 | - | - | - | 6 | - | |
| 17 | R683092 | Resist. 2000+2000 W. 230 V. | Resist. 2000+2000 W. 230 V. | Element 2000+2000 W. 230 V. | - | - | 6 | 6 | - | - | 6 | |
| 18 | Q312631 | Tornillo allenado M 5x10 | Vis M 5x10 | Bolt M 5x10 | 6 | 18 | 18 | 18 | 6 | 18 | 18 | |
| 19 | Q232036 | Arandela plana A.5 | Rondelle A.5 | Washer A.5 | 6 | 18 | 18 | 18 | 6 | 18 | 18 | |

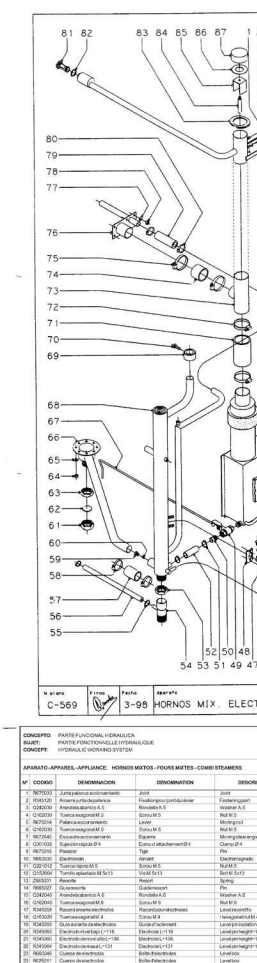


CONCEPTO: PARTE FUNCIONAL HIDRAULICA
SUJET: PARTIE FONCTIONELLE HYDRAULIQUE
CONCEPT: HYDRAULIC WORKING SYSTEM

LAMINA Nº / VUE Nº / ILUSTR. Nº: 4
PLANO Nº / PLAN Nº / DRAWING Nº: C-569
PAGINA Nº / PAGE Nº / PAGE N.: 13

APARATO: «APPLIANCE» / «APPLIANCE» HORNOS MIXTOS - FOURS MIXTES - COMBI STEAMERS

MODELO Y CANTIDAD - MOD. ET QUANT. - MOD. & QUANT.

| Nº | CODIGO | DENOMINACION | DENOMINATION | DESCRIPTION | HMM 6/11 | HMM 10/11 | HMM 19/21 | HMM 21/011 | HMM 6/11GL | HMM 10/11GL | HMM 10/21GL | OBSERVACIONES |
|---|---|---|---|---|---|---|---|---|---|---|---|---|
| 1 | R6703533 | Junta palanca accionamiento | Joint | Joint | 1 | 1 | 1 | 1 | 1 | 1 | 1 | |
| 2 | F0145120 | Arrianamuela de palanca | Fixation goujon commutateur | Fastening joint | 1 | 1 | 1 | 1 | 1 | 1 | 1 | |
| 3 | C0420139 | Arandela blanca A.S. | Rondelle A.S. | Washer A.S. | 2 | 2 | 2 | 2 | 2 | 2 | 2 | |
| 4 | C1620330 | Tuerca exagonal M.5 | Ecrou M.5 | Nut M.5 | 2 | 2 | 2 | 2 | 2 | 2 | 2 | |
| 5 | R6703214 | Palanca accionamiento | Levier | Moving rod | 1 | 1 | 1 | 1 | 1 | 1 | 1 | |
| 6 | C1620330 | Tuerca exagonal M.5 | Ecrou M.5 | Nut M.5 | 2 | 2 | 2 | 2 | 2 | 2 | 2 | |
| 7 | R6703540 | Conexion entre ejes | Equerre | Moving steel angle | 1 | 1 | 1 | 1 | 1 | 1 | 1 | |
| 8 | C2610355 | Espiga roblon Ø4 | Ecrou et attachement Ø4 | Clamp Ø 4 | 2 | 2 | 2 | 2 | 2 | 2 | 2 | |
| 9 | R6703597 | Eje | Tige | Pin | 1 | 1 | 1 | 1 | 1 | 1 | 1 | |
| 10 | R6503030 | Electroiman | Aimant | Electromagnetic | 1 | 1 | 1 | 1 | 1 | 1 | 1 | |
| 11 | C0201017 | Tuerca tapa M.5 | Ecrou M.5 | Nut M.5 | 2 | 2 | 2 | 2 | 2 | 2 | 2 | |
| 12 | C1125064 | Tornillo aplastado M.5x13 | Vis M.5x13 | Bolt M.5x13 | 2 | 2 | 2 | 2 | 2 | 2 | 2 | |
| 13 | Z9405011 | Resorte | Ressort | Spring | 1 | 1 | 1 | 1 | 1 | 1 | 1 | |
| 14 | R6503027 | Guiaresorte | Guideressort | Pin | 1 | 1 | 1 | 1 | 1 | 1 | 1 | |
| 15 | C0420441 | Arandela elastica A.E. | Rondelle A.E. | Washer A.E. | 1 | 1 | 1 | 1 | 1 | 1 | 1 | |
| 16 | C1620443 | Tuerca exagonal M.6 | Ecrou M.6 | Nut M.6 | 1 | 1 | 1 | 1 | 1 | 1 | 1 | |
| 17 | R7405108 | Racord presostato electricos | Raccord pour electricos | Linked to electric | 3 | 3 | 3 | 3 | 3 | 3 | 3 | |
| 18 | C1625320 | Tuerca exagonal M.4 | Ecrou M.4 | Hexagonal nut M.4 | 6 | 6 | 6 | 6 | 6 | 6 | 6 | |
| 19 | R7405000 | Guia aislante de electricos | Guide d'isolement | Level pin insulation | 3 | 3 | 3 | 3 | 3 | 3 | 3 | |
| 20 | R7405063 | Electrodo inferior(L=116 | Electrode L=116 | Level pin height=116 | 1 | 1 | 1 | 1 | 1 | 1 | 1 | |
| 21 | R7405060 | Electrodo de nivel alto(L=136 | Electrode L=136 | Level pin height=136 | 1 | 1 | 1 | 1 | 1 | 1 | 1 | |
| 22 | R7405041 | Electrodo de nivel L=131 | Electrode L=131 | Level pin height=131 | 1 | 1 | 1 | 1 | 1 | 1 | 1 | |
| 23 | R6503040 | Cuerpo de electrodos | Boitier électrodes | Level box | 1 | 1 | - | - | 1 | 1 | - | |
| 24 | R6503041 | Cuerpo de electrodos | Boitier électrodes | Level box | - | - | 1 | 1 | - | - | 1 | |
| 25 | C2611302 | Tornillo atornillar M.4x10 | Vis M.4x10 | Bolt M.4x10 | 4 | 4 | 4 | 4 | 4 | 4 | 4 | |
| 26 | Z7011307 | Filtro cuerpo entrada de agua | Filtre point d'entrée d'eau | Water filter | 2 | 2 | 2 | 2 | 2 | 2 | 2 | |
| 29 | Z5011114 | Manguera entrada de agua | Tuyau d'entrée d'eau | Inlet water hose | 2 | 2 | 2 | 2 | 2 | 2 | 2 | |

CONCEPTO: PARTE FUNCIONAL HIDRAULICA
SUJET: PARTIE FONCTIONELLE HYDRAULIQUE
CONCEPT: HYDRAULIC WORKING SYSTEM

LAMINA Nº / VUE Nº / ILUSTR. Nº: 4
PLANO Nº / PLAN Nº / DRAWING Nº: C-569
PAGINA Nº / PAGE Nº / PAGE N.: 14

APARATO: «APPLIANCE» / «APPLIANCE» HORNOS MIXTOS - FOURS MIXTES - COMBI STEAMERS

MODELO Y CANTIDAD - MOD. ET QUANT. - MOD. & QUANT.

| Nº | CODIGO | DENOMINACION | DENOMINATION | DESCRIPTION | HMM 6/11 | HMM 10/11 | HMM 19/21 | HMM 21/011 | HMM 6/11GL | HMM 10/11GL | HMM 10/21GL | OBSERVACIONES |
|---|---|---|---|---|---|---|---|---|---|---|---|---|
| 30 | C0205074 | Junta tuerca gas Ø25x29,5x3 | Joint Ø25x29,5x3 | Rubber joint | 2 | 2 | 2 | 2 | 2 | 2 | 2 | |
| 31 | R6505224 | Manguito doble 3/4" N.P.T. | Double 3/4" N.P.T. | 3/4" N.P.T. Coupling | - | - | - | - | 2 | 2 | 2 | |
| 32 | R6305012 | Manguito goma Ø17x29x5600 | Pipe caoutchouc Ø17x29x5600 | Rubber pipe Ø17x29 l=5600 | 1 | 1 | 1 | 1 | 1 | 1 | 1 | |
| 33 | R1405012 | Junta cierre resistencias | Joint | Joint | 1 | 2 | 2 | 2 | 1 | 2 | 2 | |
| 34 | R1405000 | Resist. vapor (3000W/s 230 V) | Resist. vapeur (3000W/s 230 V) | Boiler element (3000W/s 230 V) | 1 | 2 | 2 | 2 | 1 | 2 | 2 | |
| 35 | C2020330 | Arandela blanca A.S. | Rondelle A.S. | Washer A.S. | 8 | 12 | 12 | 12 | 6 | 12 | 12 | |
| 36 | C2420330 | Arandela elastica A.S. | Rondelle A.S. | Washer A.S. | 8 | 12 | 12 | 12 | 6 | 12 | 12 | |
| 37 | C1620330 | Tuerca exagonal M.5 | Ecrou M.5 | Nut M.5 | 8 | 12 | 12 | 12 | 6 | 12 | 12 | |
| 38 | R6503036 | Tubo empalme resistencias | Tuyau d'union | Pipe of union | 2 | 2 | 2 | 2 | 2 | 2 | 2 | |
| 39 | C2651305 | Abrazadera 23-40 | Bride 23-40 | Clamp 23-40 | 4 | 4 | 4 | 4 | 4 | 4 | 4 | |
| 40 | Z3011106 | Racord s/s 1/4" | Raccord | Raccord | 1 | 1 | 1 | 1 | 1 | 1 | 1 | |
| 41 | R6503042 | Generador de vapor | Generateur de vapeur | Steam generator | 1 | 1 | 1 | 1 | 1 | 1 | 1 | |
| 42 | R6703224 | Generador de vapor | Generateur de vapeur | Steam boiler | - | 1 | 1 | 1 | - | 1 | 1 | |
| 43 | R6170530 | Conduccion varios | Conduite pour vapeur | Steam pipe | 1 | 2 | 2 | 2 | 1 | 2 | 2 | |
| 44 | R6503051 | Asiente cuerpo generador | Isolant corps generateur | Front insulation boiler | 1 | - | - | - | - | - | - | |
| 45 | R7405111 | Asiente cuerpo generador | Isolant corps generateur | Front insulation boiler | - | 1 | - | - | - | 1 | - | |
| 46 | R6703530 | Asiente cuerpo generador | Isolant corps generateur | Front insulation boiler | - | - | 1 | 1 | 1/2 | 1/2 | 1/2 | |
| 47 | Z3501301 | Toylera | Toylere | Injector | 1 | 1 | 1 | 1 | 1 | 1 | 1 | |
| 48 | Z3501302 | Rodete | Garniture | Runner | 1 | 1 | 1 | 1 | 1 | 1 | 1 | |
| 49 | C1620330 | Tuerca exagonal M.5 | Ecrou M.5 | Nut M.5 | 2 | 2 | 2 | 2 | 2 | 2 | 2 | |
| 50 | C2020330 | Arandela blanca A.S. | Rondelle A.S. | Washer A.S. | 2 | 2 | 2 | 2 | 2 | 2 | 2 | |
| 51 | R6703207 | Conexion varios | Entree eau condenseur | Connection | 1 | 1 | 1 | 1 | 1 | 1 | 1 | |
| 52 | R7405108 | Junta conduccion varios | Joint | Joint | 1 | 1 | 1 | 1 | 1 | 1 | 1 | |
| 53 | R6703540 | Conexion grifo vaciado | Robinet de vidange | Boiler drain tap | 1 | 1 | 1 | 1 | 1 | 1 | 1 | |
| 54 | R7405104 | Manguito grifo vaciado | Double | Connector | 1 | 1 | 1 | 1 | 1 | 1 | 1 | |
| 55 | C2651304 | Abrazadera 20-32 | Bride 20-32 | Clamp 20-32 | 2 | 2 | 2 | 2 | 2 | 2 | 2 | |
| 56 | R6170518 | Empalme desagüe Ø25x2*61,5x120 | Union de vidange | Pipe | 1 | 1 | 1 | 1 | 1 | 1 | 1 | |

CONCEPTO: PARTE FUNCIONAL HIDRAULICA
SUJET: PARTIE FONCTIONELLE HYDRAULIQUE
CONCEPT: HYDRAULIC WORKING SYSTEM

LAMINA Nº / VUE Nº / ILUSTR. Nº: 4
PLANO Nº / PLAN Nº / DRAWING Nº: C-569
PAGINA Nº / PAGE Nº / PAGE N.: 15

APARATO: «APPLIANCE» / «APPLIANCE» HORNOS MIXTOS - FOURS MIXTES - COMBI STEAMERS

MODELO Y CANTIDAD - MOD. ET QUANT. - MOD. & QUANT.

| Nº | CODIGO | DENOMINACION | DENOMINATION | DESCRIPTION | HMM 6/11 | HMM 10/11 | HMM 19/21 | HMM 21/011 | HMM 6/11GL | HMM 10/11GL | HMM 10/21GL | OBSERVACIONES |
|---|---|---|---|---|---|---|---|---|---|---|---|---|
| 57 | C2020414 | Contratuerca 1" | Contre-ecrou 1" | Nut 1" | 1 | 1 | 1 | 1 | 1 | 1 | 1 | |
| 58 | R6170531 | Manguito de desagüe | Double de vidange | Drainpipe | 1 | 1 | 1 | 1 | 1 | 1 | 1 | |
| 59 | C2611302 | Abrazadera 12-20 | Bride 12-20 | Clamp 12-20 | 2 | 2 | 2 | 2 | 2 | 2 | 2 | |
| 60 | R6805012 | Tubo desagüe Ø25x1,5x3*3100 | Tuyau evacuation Ø17x21x3*3100 | Rubber pipe Ø17x21x3*3100 | 1 | 1 | 1 | 1 | 1 | 1 | 1 | |
| 61 | R6605011 | Tubo silicona Ø25x31,5x55 | Tuyau silicone Ø25x31,5x55 | Silicone pipe Ø25x31,5x55 | 1 | 1 | 1 | 1 | 1 | 1 | 1 | |
| 62 | C2651305 | Abrazadera 23-40 | Bride 23-40 | Clamp 23-40 | 2 | 2 | 2 | 2 | 2 | 2 | 2 | |
| 63 | Z5011001 | Tobera | Tuyère | Injector | 1 | 1 | 1 | 1 | 1 | 1 | 1 | |
| 64 | Z5011002 | Rodete | Gerotte | Runner | 1 | 1 | 1 | 1 | 1 | 1 | 1 | |
| 65 | R6503053 | Tuerca tapón 1" | Ecrou bouchon 1" | Nut tap 1" | 1 | 1 | 1 | 1 | 1 | 1 | 1 | |
| 66 | R6703511 | Arandela elastica Ø 24x2 | Rondelle Ø 24x2 | Joint washer Ø 24x2 | 1 | 1 | 1 | 1 | 1 | 1 | 1 | |
| 67 | C2020414 | Contratuerca 1" | Contre-ecrou 1" | Nut 1" | 1 | 1 | 1 | 1 | 1 | 1 | 1 | |
| 68 | C1620330 | Tuerca exagonal M.5 | Ecrou M.5 | Nut M.5 | 8 | 8 | 8 | 8 | 8 | 8 | 8 | |
| 69 | C2020330 | Arandela blanca A.S. | Rondelle A.S. | Washer A.S. | 8 | 8 | 8 | 8 | 8 | 8 | 8 | |
| 70 | R6170522 | Tubo de desagüe | Vidange general | Drain overpipe | 1 | 1 | 1 | 1 | 1 | 1 | 1 | |
| 71 | R6805006 | Tubo de desagüe | Vidange general | Drain overpipe | 1 | 1 | 1 | 1 | 1 | 1 | 1 | |
| 72 | R7405103 | Palanca de grifo de vaciado | Levier pour vidange | Rod boiler drain tap | 1 | - | - | - | 1 | - | - | |
| 73 | R6703504 | Palanca de grifo de vaciado | Levier pour vidange | Rod boiler drain tap | - | 1 | 1 | 1 | - | 1 | 1 | |
| 74 | R6605048 | Tubo retorno y chimenea | Conduit de retour et cheminée | Return pipe and chimney | 1 | - | - | - | 1 | - | - | |
| 75 | R6705030 | Tubo retorno y chimenea | Conduit de retour et cheminée | Return pipe and chimney | - | 1 | - | - | - | 1 | - | |
| 76 | R6605049 | Tubo retorno y chimenea | Conduit de retour et cheminée | Return pipe and chimney | - | - | 1 | 1 | - | - | 1 | |
| 77 | R6170534 | Embellecedor de chimeneas | Enjoliveur de cheminée | Chimney ext sleeve | 1 | 1 | 1 | 1 | 1 | 1 | 1 | |
| 78 | C1125064 | Tornillo aplastado M.5x13 | Vis M.5x13 | Bolt M.5x13 | 1 | 1 | 1 | 1 | 1 | 1 | 1 | |
| 79 | R7405020 | Tubo de unión | Tuyau d'union | Steam connection pipe | 1 | 1 | 1 | 1 | 1 | 1 | 1 | |
| 80 | C2651305 | Abrazadera 23-40 | Bride 23-40 | Clamp 23-40 | 2 | 2 | 2 | 2 | 2 | 2 | 2 | |
| 81 | R6705019 | Chimenea completa | Cheminée complète | Ovenchimney | 1 | 1 | 1 | 1 | - | - | - | |
| 82 | R6705017 | Entrada lavado rociadores y chimenea | Entrée pour produit détartrant | Inlet for descaling product | 1 | - | - | - | 1 | - | - | |
| 83 | R6605046 | Entrada lavado rociadores y chimenea | Entrée pour produit détartrant | Inlet for descaling product | - | 1 | - | - | - | 1 | - | |
| 84 | R7405021 | Tubo de unión | Tuyau d'union | Steam inlet pipe | 1 | 1 | 1 | 1 | - | - | - | |
| 85 | C2651307 | Abrazadera 48-60 | Bride 48-60 | Clamp 48-60 | 2 | 2 | 2 | 2 | 2 | 2 | 2 | |
| 86 | R6605051 | Tubo de entrada y retorno vapor | Ensemble d'entrée et sortie | Inlet and return steam | 1 | - | - | - | 1 | - | - | |
| 87 | R6520013 | Tubo de entrada y retorno vapor | Conduit d'entrée et sortie de vapeur | Inlet pipe and steam return pipe | - | 1 | 1 | 1 | - | 1 | 1 | |

CONCEPTO: PARTE FUNCIONAL HIDRAULICA
SUJET: PARTIE FONCTIONELLE HYDRAULIQUE
CONCEPT: HYDRAULIC WORKING SYSTEM

LAMINA Nº / VUE Nº / ILUSTR. Nº: 4
PLANO Nº / PLAN Nº / DRAWING Nº: C569
PAGINA Nº / PAGE Nº / PAGE N.: 16

APARATO: «APPLIANCE» / «APPLIANCE» HORNOS MIXTOS - FOURS MIXTES - COMBI STEAMERS

MODELO Y CANTIDAD - MOD. ET QUANT. - MOD. & QUANT.

| Nº | CODIGO | DENOMINACION | DENOMINATION | DESCRIPTION | HMM 6/11 | HMM 10/11 | HMM 19/21 | HMM 21/011 | HMM 6/11GL | HMM 10/11GL | HMM 10/21GL | OBSERVACIONES |
|---|---|---|---|---|---|---|---|---|---|---|---|---|
| 88 | C2020340 | Arandela plana A. 8 | Rondelle A.S. | Washer A.S. | 6 | 6 | 6 | 6 | 6 | 6 | 6 | |
| 89 | C1620340 | Tuerca exagonal M.8 | Ecrou M.8 | Nut M.8 | 6 | 6 | 6 | 6 | 6 | 6 | 6 | |
| 90 | R6205012 | Tubo de unión de retorno | Tuyau d'union de retour | Steam return pipe | 1 | 1 | 1 | 1 | 1 | 1 | 1 | |
| 91 | C2651304 | Abrazadera 20-32 | Bride 20-32 | Clamp 20-32 | 2 | 2 | 2 | 2 | 2 | 2 | 2 | |
| 92 | R6170324 | Tapón rellenamiento | Bouchon pour cebertage | Descaling tap | - | - | - | - | 1 | 1 | 1 | |
| 93 | R6703225 | Junta desarrollo sella | Joint | Joint | - | - | - | - | 1 | 1 | 1 | |
| 94 | R3403915 | Panamuro de chimenea | Protection de cheminée | Chimney protection | 1 | 1 | 1 | 1 | 1 | 1 | 1 | |
| 95 | R6705008 | Eje de tapon | Axe du bouchon | Moving rod chimney | 1 | 1 | 1 | 1 | 1 | 1 | 1 | |
| 96 | R6705001 | Guia de tapon | Guide du bouchon | Moving guide | 1 | 1 | 1 | 1 | 1 | 1 | 1 | |
| 97 | R6705007 | Junta de tapon | Joint du bouchon | Rubber seal | 1 | 1 | 1 | 1 | 1 | 1 | 1 | |
| 98 | R6705006 | Tapón de chimenea | Bouchon de cheminée | Close chimney | 1 | 1 | 1 | 1 | 1 | 1 | 1 | |

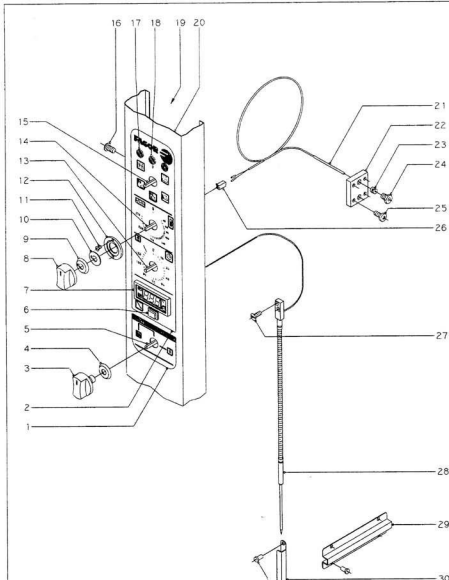


| N. plano | Firma | Fecha | Aparato | Lámina | Fagor Industrial S.Coop. | FAGOR |
|---|---|---|---|---|---|---|
| C-570 | | 3-98 | HORNOS MIX. ELECTROMECANICOS | 5 | Fagor Industrial S.Coop. Dpto. | |

**CONCEPTO:** PORTAMANDOS Y SISTEMA ELECTRICO
**SUJET:** PANNEAU DE COMMANDE ET SYSTEME ELECTRIQUE
**CONCEPT:** CONTROL PANEL AND ELECTRIC SYSTEM

LAMINA Nº / VUE Nº / ILUSTR. Nº: 5
PLANOS* / PLAN Nº / DRAWINGS N.: C-570
PAGINA Nº / PAGEN° / PAGE N.: 18

APARATO-APPAREIL-APPLIANCE: HORNOS MIXTOS - FOURS MIXTES - COMBI STEAMERS

MODELO Y CANTIDAD - MOD. ET QUANT. - MOD. & QUANT.

| Nº | CODIGO | DENOMINACION | DENOMINATION | DESCRIPTION | HMM 6/11 | HMM 10/11 | HMM 10/21 | HMM 21/011 | HMM 6/11 UL | HMM 10/11 UL | HMM 10/21 UL | OBSERVACIONES |
|---|---|---|---|---|---|---|---|---|---|---|---|---|
| 1 | R653314 | Sangre/fin interior (machta) | Adhesif neutre | Poliuretano/re fire | 1 | - | - | - | - | - | - | |
| 1 | R653004 | Sangre/fin interior | Adhesif | Poliuretano/re fire | - | 1 | 1 | 1 | - | - | - | |
| 1 | R653007 | Sangre/fin interior (machta) | Adhesif neutre | Poliuretano/re fire | - | - | - | - | 1 | - | - | |
| 1 | R653031 | Sangre/fin interior | Adhesif | Poliuretano/re fire | - | - | - | - | - | 1 | 1 | |
| 2 | R743012 | Sangre/fin superior | Adhesif/re commandes | Poliuretano/re fire/for control | 1 | 1 | 1 | 1 | - | - | - | |
| 2 | R743008 | Sangre/fin superior | Adhesif/re commandes | Poliuretano/re fire/for control | - | - | - | - | 1 | 1 | 1 | |
| 3 | R663062 | Boton de mando (conmutadores) | Bouton pour commutateur | Knob switch | 2 | 3 | 3 | 3 | - | - | - | |
| 3 | R663070 | Boton de mando (conmutadores) | Bouton pour commutateur | Knob switch | - | - | - | - | 2 | 3 | 3 | |
| 4 | R663044 | Junta (conmutadores) | Joint pour commutateur | Rubber seal | 2 | 3 | 3 | 3 | 2 | 3 | 3 | |
| 5 | R752000 | Contactador de potencia | Commutateur de puissance | Power switch | - | 1 | 1 | 1 | - | 1 | 1 | |
| 6 | R743008 | Interruptor regulacion sonda | Interrupteur de sonde | Probe switch | 1 | 1 | 1 | 1 | 1 | 1 | 1 | |
| 7 | R743003 | Termostato digital | Thermostat | Thermostat | 1 | - | - | - | - | - | - | |
| 7 | R743020 | Termostato digital F | Thermostat | Thermostat | - | 1 | 1 | 1 | 1 | 1 | 1 | |
| 8 | R663063 | Boton de mando (electrónica) | Bouton pour electronique | Knob electronic | 1 | - | - | - | 1 | - | - | |
| 8 | R663071 | Boton de mando (electrónica) | Bouton pour electronique | Knob electronic | - | 1 | 1 | 1 | 1 | 1 | 1 | |
| 9 | R663045 | Junta (conmutadores) | Joint pour electronique | Rubber seal | 1 | 1 | 1 | 1 | 1 | 1 | 1 | |
| 10 | R662810 | Arandela guia | Rondelle guide | Washer | 1 | 1 | 1 | 1 | 1 | 1 | 1 | |
| 11 | C151546 | Tornillo avellanado M.3x5 | Vis M.3x5 | Boltf M.3x5 | 2 | 2 | 2 | 2 | 2 | 2 | 2 | |
| 12 | R662900 | Guia boton de mando | Guide bouton de commande | Knob guide | 1 | 1 | 1 | 1 | 1 | 1 | 1 | |
| 13 | R723000 | Temporizador manual | Temporisateur | Timer | 1 | 1 | 1 | 1 | 1 | 1 | 1 | |
| 14 | R743013 | Termostato electrónico °C | Thermostat | Thermostat | 1 | 1 | 1 | 1 | - | - | - | |
| 14 | R663060 | Termostato electrónico 500°F | Thermostat | Thermostat | - | - | - | - | 1 | 1 | 1 | |
| 15 | R743002 | Conmutador de fundones | Commutateur de puissance | Switch | 1 | 1 | 1 | 1 | 1 | 1 | 1 | |
| 16 | C153004 | Tornillo aplastaus M.5x13 | Vis M.5x13 | Bolt M.5x13 | 3 | 3 | 3 | 3 | 3 | 3 | 3 | |
| 17 | 2203066 | Piloto ámbar | Témoin jaune | Yellow light | 2 | 2 | 2 | 2 | - | - | - | |
| 17 | R663058 | Piloto ámbar | Témoin jaune | Yellow light | - | - | - | - | 2 | 2 | 2 | |
| 18 | 2203064 | Piloto verde | Témoin vert | Green light | 1 | 1 | 1 | 1 | - | - | - | |
| 18 | R663055 | Piloto verde | Témoin vert | Green light | - | - | - | - | 1 | 1 | 1 | |
| 19 | R742603 | Soporte componentes | Support | Support | 1 | 1 | 1 | 1 | 1 | 1 | 1 | |
| 20 | R742800 | Panel portamandos | Panneau de commande | Control panel | 1 | - | - | - | 1 | - | - | |
| 20 | R752800 | Panel portamandos | Panneau de commande | Control panel | - | 1 | 1 | 1 | - | 1 | 1 | |

**CONCEPTO:** PORTAMANDOS Y SISTEMA ELECTRICO
**SUJET:** PANNEAU DE COMMANDE ET SYSTEME ELECTRIQUE
**CONCEPT:** CONTROL PANEL AND ELECTRIC SYSTEM

LAMINA Nº / VUE Nº / ILUSTR. Nº: 5
PLANOS* / PLAN Nº / DRAWINGS N.: C-570
PAGINA Nº / PAGEN° / PAGE N.: 19

APARATO-APPAREIL-APPLIANCE: HORNOS MIXTOS - FOURS MIXTES - COMBI STEAMERS

MODELO Y CANTIDAD - MOD. ET QUANT. - MOD. & QUANT.

| Nº | CODIGO | DENOMINACION | DENOMINATION | DESCRIPTION | HMM 6/11 | HMM 10/11 | HMM 10/21 | HMM 21/011 | HMM 6/11 UL | HMM 10/11 UL | HMM 10/21 UL | OBSERVACIONES |
|---|---|---|---|---|---|---|---|---|---|---|---|---|
| 21 | R653035 | Cuerpo/ter/termoparUL=1500 | Sonde de/temperature UL=1500 | Cuer/thermocouple L=1500 | 1 | 1 | 1 | 1 | 1 | 1 | 1 | |
| 22 | R662909 | Apoyo racel/sonda | Appui recel/sonde | Probe/recel support | 1 | 1 | 1 | 1 | 1 | 1 | 1 | |
| 23 | R662602 | Bicono cierre sonda | Bicone de sonde | Bicone et/cone probe | 1 | 1 | 1 | 1 | 1 | 1 | 1 | |
| 24 | R662629 | Recel/cierre sonda | Recel/fermeture sonde | Closure/accompline | 1 | 1 | 1 | 1 | 1 | 1 | 1 | |
| 25 | C153021 | Tornillo allenado M.4x10 | Vis M.4x10 | Bolt M.4x10 | 4 | 4 | 4 | 4 | 4 | 4 | 4 | |
| 26 | R662643 | Cone/arandelas (2 cie) | Ecrou | Cone/arandelas | 1 | 1 | 1 | 1 | 1 | 1 | 1 | |
| 27 | C152919 | Tornillo avellanado M.4x15 | Vis M.4x15 | Bolt M.4x15 | 2 | 2 | 2 | 2 | 2 | 2 | 2 | |
| 28 | R663015 | Sonda de nucleo | Sonde au coeur | Core probe | 1 | - | - | - | - | - | - | |
| 28 | R673001 | Sonda de nucleo | Sonde au coeur | Core probe | - | 1 | 1 | 1 | - | 1 | 1 | |
| 29 | R662628 | Soporte sonda | Support/fil sonde | Core probe support | 1 | - | - | - | 1 | - | - | |
| 30 | R673043 | Soporte de sonda | Support/fil sonde | Core probe support | - | 1 | 1 | 1 | 1 | 1 | 1 | |
| 31 | G412002 | Remache tubular Ø 4x7,5 | Rivet Ø 4x7,5 | Rivet Ø 4x7,5 | 4 | 2 | 2 | 2 | 4 | 2 | 2 | |

| N. plano | Firma | Fecha | Aparato | Lamina | Pagar Industrial S Coop | FAGOR |
|---|---|---|---|---|---|---|
| C-571 | | 3-98 | HORNOS MIX. ELECTROMECANICOS | 6 | Otxra | |

**CONCEPTO:** PANEL CUADRO ELECTRICO
**SUJET:** PANNEAU TABLEAU ELECTRIQUE
**CONCEPT:** ELECTRIC POWER AND CONTROL

LAMINA Nº VUE Nº ILUSTR. N. 6 | PLANO Nº PLAN Nº DRAWING N. C-571 | PAGINA Nº PAGEN° PAGEN. 21

**APARATO-APPAREIL-APPLIANCE: HORNOS MIXTOS - FOURS MIXTES - COMBI STEAMERS**

MODELO Y CANTIDAD - MOD. ET QUANT. - MOD. & QUANT.

| Nº | CODIGO | DENOMINACION | DENOMINATION | DESCRIPTION | 10EM 6/11 | 10EM 10/11 | 10EM 10/21 | 10EM 20/21 | 10EM 6/11 GL | 10EM 10/11 GL | 10EM 20/21GL | OBSERVACIONES |
|---|---|---|---|---|---|---|---|---|---|---|---|---|
| 1 | 9663317 | Panel cuadro electrico | Plaque metallique | Electric panel | 1 | 1 | 1 | 1 | 1 | 1 | 1 | |
| 2 | 9663318 | Cerrojo,aguja,retuerdo | Gache,pour plastifie | Electric panel guide | 1 | 1 | 1 | 1 | 1 | 1 | 1 | |
| 3 | R743006 | Base enchufable | Socle | Terminal block | 1 | 1 | 1 | 1 | 1 | 1 | 1 | |
| 4 | R343012 | Detector de niveles | Detecteur de niveaux | Level controller | 1 | 1 | 1 | 1 | - | - | - | |
| 4 | R743031 | Detector de niveles | Detecteur de niveaux | Level controller | - | - | - | - | 1 | 1 | 1 | |
| 5 | 9663339 | Transformador | Transformateur | Transformer | 1 | 1 | 1 | 1 | - | - | - | |
| 6 | Z503081 | Zumbador | Sonnerie | Buzzer | 1 | 1 | 1 | 1 | 1 | 1 | 1 | |
| 7 | 9663054 | Guia contactor L=120 | Guide de contacteur L=120 | Contactor guide L=120 | 1 | 1 | 1 | 1 | 1 | 1 | 1 | |
| | 9663055 | Guia contactor L=129 | Guide de contacteur L=120 | Contactor guide L=120 | 2 | 2 | 2 | 2 | 2 | 2 | 2 | |
| | Z122018 | Guia contactor L=55 | Guide de contacteur L=55 | Contactor guide L=55 | 1 | 1 | 1 | 1 | 1 | 1 | 1 | |
| 8 | Q221342 | Remache esagonal M.5 | Rivet M.5 | Rivet | 3 | 3 | 3 | 3 | 3 | 3 | 3 | |
| 9 | Z103066 | Ventilador | Ventilateur | Fan | 1 | 1 | 1 | 1 | 1 | 1 | 1 | |
| 10 | 9663031 | Contactor TF-3010-GAL2 | Contacteur TF-3010-GAL2 | Contactor TF-3010-GAL2 | 2 | 4 | 4 | 4 | 2 | 4 | 4 | |
| 11 | 9663061 | Interruptor de potencia | Interrupteur de puissance | Power contactor | - | - | - | - | 1 | 1 | 1 | |
| | Z123018 | Guia contactor L=32 | Guide de contacteur | Switch guide | - | - | - | - | 1 | 1 | 1 | |
| 12 | 9663031 | Contactor TF-3010-GAL2 | Contacteur TF-3010-GAL2 | Contactor TF-3010-GAL2 | 1 | - | - | - | 1 | - | - | |
| 13 | 9663031 | Contactor TF-3010-GAL2 | Contacteur TF-3010-GAL2 | Contactor TF-3010-GAL2 | - | 1 | 1 | - | - | 1 | - | |
| 13 | 9673037 | Contactor CI-4537-I-10041 | Contacteur CI-4537-I-10041 | Contactor CI-4537-I-10041 | - | - | - | 1 | - | - | 1 | |
| 14 | - | Conector hembra 9 vias | Fiche 9 pins | Female connector | 1 | 1 | 1 | 1 | 1 | 1 | 1 | |
| 15 | - | Conector hembra 6 vias | Fiche 6 pins | Female connector | 1 | 1 | 1 | 1 | 1 | 1 | 1 | |
| | - | Conector hembra 4 vias | Fiche 4 pins | Female connector | 1 | 1 | 1 | 1 | 1 | 1 | 1 | |
| 17 | R343124 | Termostato de seguridad | Thermostat de securité | Safety thermostat | 1 | 1 | 1 | 1 | 1 | 1 | 1 | |
| 18 | R343100 | Termostato de condensacion | Thermostat pour condenseur | Steam condenser thermostat | 1 | 1 | 1 | 1 | 1 | 1 | 1 | |
| 19 | Q413000 | Remache tubular Ø 4x7,5 | Rivet Ø 4x7,5 | Rivet Ø 4x7,5 | 2 | 2 | 2 | 2 | 2 | 2 | 2 | |
| 20 | R343120 | Bulbo sonda aman.thermostato | Support de thermostat | Thermostat support | 1 | 1 | 1 | 1 | 1 | 1 | 1 | |
| 21 | V103313 | Pasacables | Protection | Bushing | 1 | 1 | 1 | 1 | 1 | 1 | 1 | |
| 22 | R743029 | Borne tierra 19 | Terminal tierra | Earth terminal | 1 | - | - | - | - | - | - | |
| 22 | Z103006 | Borne tierra 35 | Terminal tierra | Earth terminal | - | 1 | 1 | 1 | - | 1 | 1 | |
| 23 | Z307002 | Borne azul N 19 | Terminal bleu N | Neutral terminal | 1 | - | - | - | - | - | - | |
| 24 | R673010 | Borne azul N 35 | Terminal bleu N | Neutral terminal | - | 1 | 1 | 1 | - | 1 | 1 | |
| 24 | R453023 | Borne gris fases 19 | Terminal gris phases | Phases terminals | 1 | - | - | - | - | - | - | |
| 24 | R263003 | Borne gris fases 35 | Terminal gris phases | Phases terminals | - | 1 | 1 | 1 | - | 1 | 1 | |

**CONCEPTO:** PANEL CUADRO ELECTRICO
**SUJET:** PANNEAU TABLEAU ELECTRIQUE
**CONCEPT:** ELECTRIC POWER AND CONTROL

LAMINA Nº VUE Nº ILUSTR. N. 6 | PLANO Nº PLAN Nº DRAWING N. C-571 | PAGINA Nº PAGEN° PAGEN. 22

**APARATO-APPAREIL-APPLIANCE: HORNOS MIXTOS - FOURS MIXTES - COMBI STEAMERS**

MODELO Y CANTIDAD - MOD. ET QUANT. - MOD. & QUANT.

| Nº | CODIGO | DENOMINACION | DENOMINATION | DESCRIPTION | 10EM 6/11 | 10EM 10/11 | 10EM 10/21 | 10EM 20/21 | 10EM 6/11 GL | 10EM 10/11 GL | 10EM 20/21GL | OBSERVACIONES |
|---|---|---|---|---|---|---|---|---|---|---|---|---|
| 25 | Z263353 | Topa | Top | Block terminal | 1 | - | - | - | 1 | - | - | |
| 26 | Z503096 | Topa | Top | Block terminal | - | 1 | 1 | 1 | - | 1 | 1 | |
| 26 | Z307102 | Filtro electrico | Filtre electrique | Electric filter | 1 | 1 | 1 | 1 | 1 | 1 | 1 | |
| 27 | R653054 | Protector sonda de | Protecteur sonde | Probe protect support | 1 | 1 | 1 | 1 | 1 | 1 | 1 | |
| 28 | Q313021 | Tornillo sonda M.4x10 | Vis M.4x10 | Bolt M.4x10 | 4 | 4 | 4 | 4 | 4 | 4 | 4 | |
| 29 | R613053 | Tubo junta de silicona | Tuyau jonta silicone | Silicone tube joint | 1 | 1 | 1 | 1 | 1 | 1 | 1 | |
| 30 | R652520 | Rascador cierre sonda | Racord fermeture sonde | Close race probe | 1 | 1 | 1 | 1 | 1 | 1 | 1 | |
| 31 | R243016 | Termostato de seguridad | Thermostat de securité | Safety thermostat | 1 | 1 | 1 | 1 | 1 | 1 | 1 | |
| 32 | R343039 | Soporte de termostato | Support du thermostat | Thermostat support | 2 | 2 | 2 | 2 | 2 | 2 | 2 | |
| 33 | R673004 | Perfil sellos | Support de feutres | Holder fans | 3 | 3 | 3 | 3 | 3 | 3 | 3 | |
| 34 | Z263303 | Topa | Top | Block terminal | 1 | 1 | 1 | 1 | 1 | 1 | 1 | |
| 35 | P156011 | Fusible 4 A. | Fuse 4 A. | Fuse 4 A. | 2 | 2 | 2 | 2 | 2 | 2 | 2 | |
| 36 | 9663031 | Contactor TF-3010-GAL2 | Contacteur TF-3010-GAL2 | Contactor TF-3010-GAL2 | 1 | 2 | 2 | 2 | 1 | 2 | 2 | |
| 37 | R343018 | Termostato vapor | Thermostat vapeur | Steam thermostat | 1 | 1 | 1 | 1 | 1 | 1 | 1 | |
| 38 | Q413092 | Remache tubular Ø 4x7,5 | Rivet Ø 4x7,5 | Rivet Ø 4x7,5 | 2 | 2 | 2 | 2 | 2 | 2 | 2 | |
| 39 | R653052 | Soporte de bulbo | Support de bulbe | Bulbe support | 1 | 1 | 1 | 1 | 1 | 1 | 1 | |
| 40 | Q301633 | Arandela de seguridad | Rondelle de securité | Clamp | 1 | 1 | 1 | 1 | 1 | 1 | 1 | |
| 41 | Q161310 | Tuerca esagonal M.3 | Ecrou M.3 | Nut M.3 | 4 | 4 | 4 | 4 | 4 | 4 | 4 | |
| 42 | R613532 | Soporte de resorte | Support de ressort | Angle support | 1 | 1 | 1 | 1 | 1 | 1 | 1 | |
| 43 | Z709003 | Muelle | Ressort | Spring | 1 | 1 | 1 | 1 | 1 | 1 | 1 | |
| 44 | Q221341 | Remache esagonal M.4 | Rivet M.4 | Rivet M.4 | 2 | 2 | 2 | 2 | 2 | 2 | 2 | |
| 45 | Q103021 | Tornillo sonda M.4x10 | Vis M.4x10 | Bolt M.4x10 | 2 | 2 | 2 | 2 | 2 | 2 | 2 | |
| 46 | R613052 | Soporte | Aliexpress | Switch table | 1 | 1 | 1 | 1 | 1 | 1 | 1 | |
| 46 | R613054 | Micro | Micro | Switch | 1 | 1 | 1 | 1 | 1 | 1 | 1 | |
| 46 | R613525 | Pulsador expansion | Poussoir de expansion | Steelvapor | 2 | 2 | 2 | 2 | 2 | 2 | 2 | |
| 47 | Q103113 | Tornillo cilindrico M.3x20 | Vis M.3x20 | Bolt M.3x20 | 2 | 2 | 2 | 2 | 2 | 2 | 2 | |
| 48 | Q311304 | Tornillo esp.avell.M.5x50 | Vis M.5x50 | Bolt M.5x50 | - | - | - | - | 1 | 1 | 1 | |
| 49 | R653060 | Transformador 220/12v , 15W | Transform.vitesr 220/12v , 15W | 220/12v, 15W, Transformer | - | - | - | - | 1 | 1 | 1 | |
| 50 | R653059 | Transformador 220/12v , 30W | Transform.vitesr 220/12v , 30W | 220/12v, 30W, Transformer | - | - | - | - | 1 | 1 | 1 | |

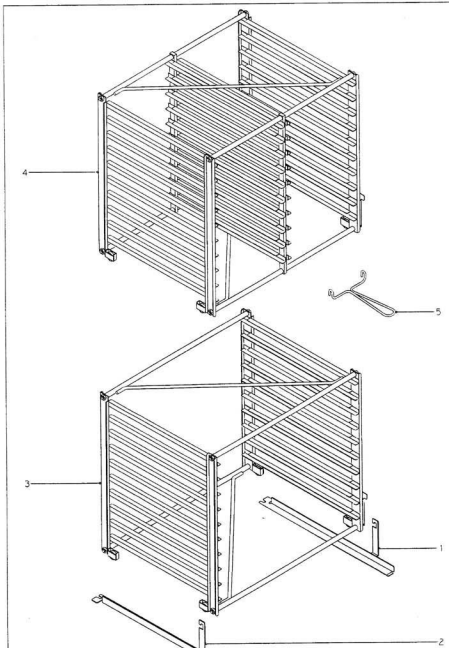


| N. El.Mo | Firma | Fecha | Apartir's | | Lamina | | |
|---|---|---|---|---|---|---|---|
| C-565 | | 3-98 | ESTRUCTURAS PARA HORNOS | | — | Fagor Industrial S.Coop Ltda | FAGOR |

**CONCEPTO:** VARIOS
**SUJET:** DIVERS
**CONCEPT:** MISCELANEOUS

LAMINA Nº / VUE Nº / ILLUSTR. Nº: [ ]
PLANO Nº / PLAN Nº / DRAWING Nº: [ ]
PAGINA Nº / PAGEN° / PAGE: 25

**APARATO-APPAREIL-APPLIANCE: HORNOS MIXTOS - FOURS MIXTES - COMBI STEAMERS**

MODELO Y CANTIDAD - MOD. ET QUANT. - MOD. A QUANT.

| Nº | CODIGO | DENOMINACION | DENOMINATION | DESCRIPTION | HMM 6/11 | HMM 10/11 | HMM 10/21 | HMM 21/011 | HMM 6/11 GL | HMM 10/11 GL | HMM 10/21 GL | OBSERVACIONES |
|---|---|---|---|---|---|---|---|---|---|---|---|---|
| | 2306121 | Placa metálica | Plaque | Plate | 1 | 1 | 1 | 1 | - | - | - | |
| | 6746900 | Folleto de instrucciones | Notice technique | Instructions for use | 1 | 1 | 1 | 1 | - | - | - | |
| | R743006 | Esquema eléctrico adhesivo | Schéma adhésif | Electric diagram | 1 | - | - | - | - | - | - | (HC-71.334) |
| | R713002 | Esquema eléctrico adhesivo | Schéma adhésif | Electric diagram | - | 1 | 1 | 1 | - | - | - | (HC-71.335) |
| | R743010 | Cableado de mando | Câblage de commande | Main control wiring | 1 | 1 | 1 | 1 | - | - | - | |
| | R653022 | Cableado de convección | Câblage pour air pulsé | Convection wiring | 1 | - | - | - | - | - | - | |
| | R673006 | Cableado de convección | Câblage pour air pulsé | Convection wiring | - | 1 | 1 | 1 | - | - | - | |
| | R653023 | Cableado de luz y vapor | Câblage pour lampes et vapeurs | Light and vapour switch wiring | 1 | 1 | 1 | 1 | - | - | - | |
| | R653024 | Cableado de luz de puerta | Câblage pour lampes de porte | Light wiring | 1 | 1 | 1 | 1 | - | - | - | |
| | R653021 | Cableado de vapor | Câblage de vapeur | Steam wiring | 1 | - | - | - | - | - | - | |
| | R673005 | Cableado de vapor | Câblage de vapeur | Steam wiring | - | 1 | 1 | 1 | - | - | - | |
| | R656005 | Placa mando | Plaque | Control Plate | - | - | - | - | 1 | 1 | 1 | |
| | 6746903 | Folleto de instrucciones | Notice technique | Instructions for use | - | - | - | - | 1 | 1 | 1 | |
| | R743008 | Esquema eléctrico adhesivo | Schéma adhésif | Electric diagram | - | - | - | - | 1 | - | - | (HC-73.165) |
| | 6713012 | Esquema eléctrico adhesivo | Schéma adhésif | Electric diagram | - | - | - | - | - | 1 | 1 | (HC-73.166) |
| | R743008 | Cableado de mando | Câblage de commande | Main control wiring | - | - | - | - | 1 | 1 | 1 | |
| | R653021 | Cableado de convección | Câblage pour air pulsé | Convection wiring | - | - | - | - | 1 | - | - | |
| | R653021 | Cableado de convección | Câblage pour air pulsé | Convection wiring | - | - | - | - | - | 1 | 1 | |
| | R653022 | Cableado de luz y vapor | Câblage pour lampes et vapeurs | Light and vapour switch wiring | - | - | - | - | 1 | 1 | 1 | |
| | R653023 | Cableado de luz de puerta | Câblage pour lampes de porte | Door Light wiring | - | - | - | - | 1 | 1 | 1 | |
| | R653063 | Cableado conmutador de potencia | Câblage interrupteur de puissance | Power switch wiring | - | - | - | - | 1 | 1 | 1 | |
| | R656004 | Etiqueta de servicio | Adhesif "service" | "Washer" label | - | - | - | - | 1 | 1 | 1 | |
| | R656506 | Etiqueta puerta cabestrillo | Adhésif "porte chaude" | "Hot door" label | - | - | - | - | 1 | 1 | 1 | |
| | R656507 | Etiqueta precaución | Adhesif précaution" | "Caution" label | - | - | - | - | 1 | 1 | 1 | |
| | R656508 | Etiqueta de fusibles | Adhesif "fusibles" | "Fuses" label | - | + | - | + | 1 | 1 | 1 | |
| | R656509 | N° de serie Market-Forge | N° de série Market-Forge | Market-Forge serial number | - | - | - | - | 1 | 1 | 1 | |
| | R656510 | Etiqueta control Market-Forge | Adhesif de control "MF" | Market-Forge Control label | - | - | - | - | 1 | 1 | 1 | |
| | R656511 | Etiqueta embalaje Market-Forge | Adhésif emballage M.F. | Market-Forge Packing label | - | - | - | - | 4 | 4 | 4 | |
| | 6745502 | Etiqueta descalcificación | Adhésif "détartrage" | "Descaling" label | - | - | - | - | 1 | 1 | 1 | |
| | R653021 | Cableado de vapor | Câblage de vapeur | Steam wiring | - | - | - | - | 1 | - | - | |
| | R673005 | Cableado de vapor | Câblage de vapeur | Steam wiring | - | - | - | - | - | 1 | 1 | |

**CONCEPTO:** ESTRUCTURA PORTABANDEJAS
**SUJET:** CHARIOT POUR PLATEAUX
**CONCEPT:** TROLLEY TRAYS GUIDE

LAMINA Nº / VUE Nº / ILLUSTR. Nº: 7
PLANO Nº / PLAN Nº / DRAWING Nº: C-565
PAGINA Nº / PAGEN° / PAGE: 24

**APARATO-APPAREIL-APPLIANCE: HORNOS MIXTOS - FOURS MIXTES - COMBI STEAMERS**

MODELO Y CANTIDAD - MOD. ET QUANT. - MOD. A QUANT.

| Nº | CODIGO | DENOMINACION | DENOMINATION | DESCRIPTION | HMM 6/11 | HMM 10/11 | HMM 10/21 | HMM 21/011 | HMM 6/11 GL | HMM 10/11 GL | HMM 10/21 GL | OBSERVACIONES |
|---|---|---|---|---|---|---|---|---|---|---|---|---|
| 1 | R672021 | Rail derecho | Guide droite | Right support for trolley | - | - | OP. | - | - | - | - | |
| 2 | R672022 | Rail izquierdo | Guide gauche | Left support for trolley | - | - | OP. | - | - | - | - | |
| 3 | R672027 | Estructura 10/11 | Chariot 10/11 | Trolley 10/11 | - | - | OP. | - | - | - | - | |
| 5 | R672032 | Gancho tirador | Poignée pour chariot | Trolley knob | - | - | OP. | - | - | - | - | |
| | | | | | | | | | | | | |
| 1 | R653069 | Rail derecho | Guide droite | Right support for trolley | - | - | OP. | 1 | - | - | - | OP: |
| 2 | R653068 | Rail izquierdo | Guide gauche | Left support for trolley | - | - | OP. | 1 | - | - | - | Opcional |
| 3 | R653017 | Estructura 10/21 | Chariot 10/21 | Trolley 10/21 | - | - | OP. | - | - | - | - | Optional |
| 4 | R653018 | Estructura 21/011 | Chariot 21-10/11 | Trolley 21-10/11 | - | - | - | 1 | - | - | - | in option |
| 5 | R672032 | Gancho tirador | Poignée pour chariot | Trolley knob | - | - | OP. | 1 | - | - | - | |