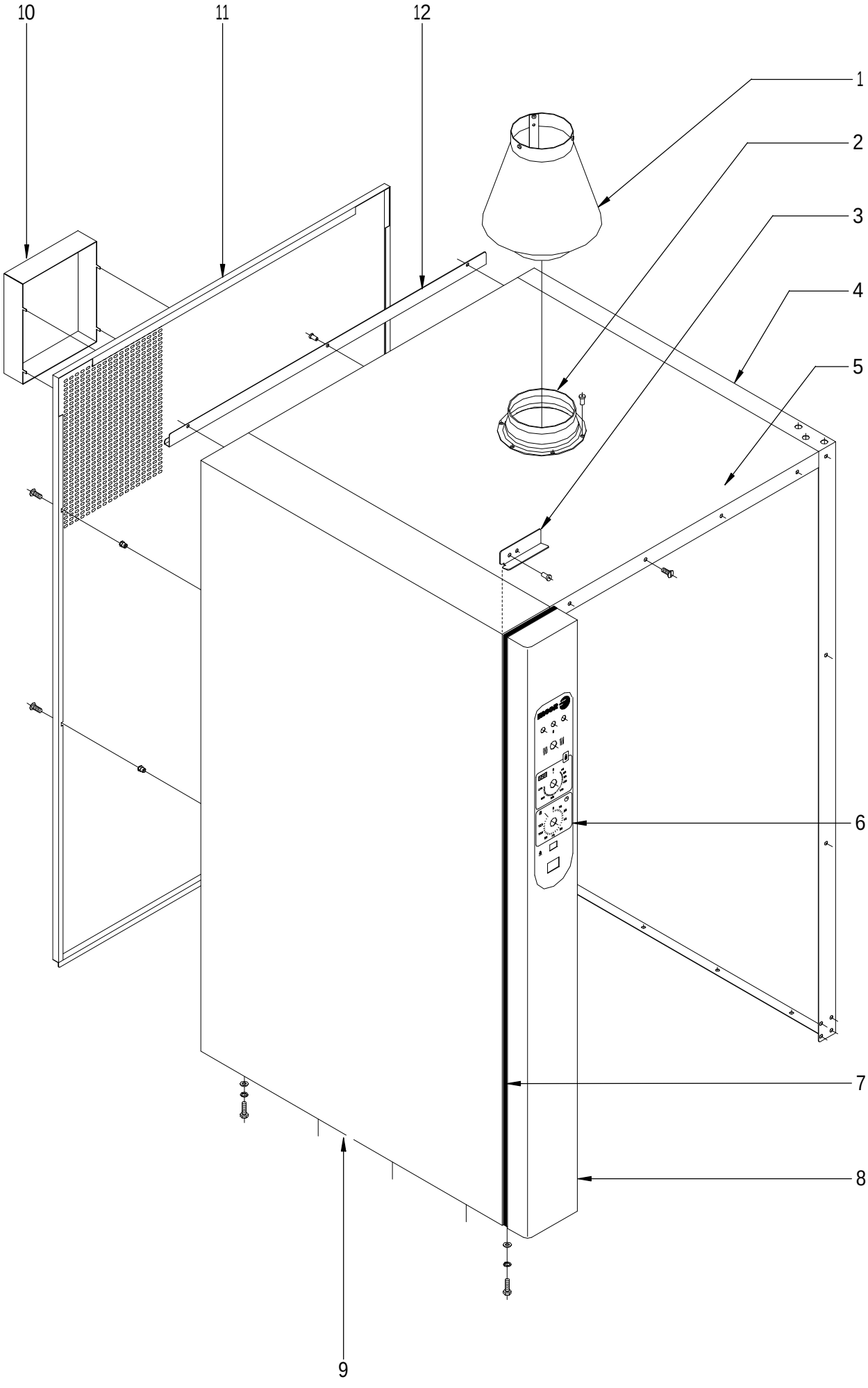


| N plano | Firma | Fecha | Aparato | MUEBLE | Lamina | |
|---|---|---|---|---|---|---|
| C-1982 | | 2008-02 | HORNO HGC-6/11;10/11; 20/11 | | 1 | Fagor Industrial S.Coop. FAGOR<br>Oñate |

| MOD. | HORNOS | ZONA | MUEBLE | PLANO | C-1982 |
|---|---|---|---|---|---|

| ITEM | CODIGO | DENOMINACION | TEXTO | HGC-6/11 | HGC-10/11 | HGC-20/11 | | | | | NOTAS |
|---|---|---|---|---|---|---|---|---|---|---|---|
| 1 | R272612000 | CHIMENEA | FLUE PIPE | 1 | 1 | 1 | | | | | |
| | R292646000 | CONDUCTO HUMOS | SMOKE CONDUCT | 1 | 1 | 1 | | | | | |
| | R272614000 | SOPORTE CHIMENEA HCG/HGC | FLUEPIPE SUPPORT HCG/HGC | 3 | 3 | 3 | | | | | |
| | Q412002000 | REMACHE AVINOX Ø4x10MM | RIVET AVINOX Ø4x10MM | 6 | 6 | 12 | | | | | |
| 2 | R292645000 | GUIA CHIMENEA | FLUEPIPE GUIDE | 1 | 1 | 1 | | | | | |
| | Q412002000 | REMACHE AVINOX Ø4x10MM | RIVET AVINOX Ø4x10MM | 6 | 6 | 6 | | | | | |
| 3 | R662811000 | FIJACION PORTAMANDOS | CONTROL HOLDER ATTACHM. | _ | 1 | 1 | | | | | |
| | Q412002000 | REMACHE AVINOX Ø4x10MM | RIVET AVINOX Ø4x10MM | _ | 2 | 2 | | | | | |
| 4.5.9 | T082805000 | CUERPO EXTERIOR HCG-6/11 | EXTERIOR BODY HCG-6/11 | 1 | _ | _ | | | | | |
| 4.5.9 | T012806000 | CUERPO EXTERIOR HCG-10/11 | EXTERIOR BODY HCG-10/11 | _ | 1 | _ | | | | | |
| 4 | T102804000 | PANEL LATERAL DCHO HCG-20-11 | SIDE PANEL RIGHT HCG-20-11 | _ | _ | 1 | | | | | |
| | Q152017000 | TORNILLO AMARRE M6X13 A304 | FASTENING BOLT M6X13 A304 | 4 | 5 | _ | | | | | |
| | Q221343000 | REMACHE EXAGONAL M6 | HEXAGONAL RIVET M6 | 4 | 4 | 4 | | | | | |
| | Q232040000 | ARANDELA A6 | WASHER A6 | 4 | 4 | 4 | | | | | |
| | Q262040000 | ARANDELA GROW. A6 A.304 | WASHER GROW. A6 A.304 | 4 | 4 | 4 | | | | | |
| | Q012042000 | TORNILLO EXAGONAL M6x15 | HEXAGONAL BOLT M6x15 | 4 | 4 | 4 | | | | | |
| 5 | T102805000 | PANEL SUPERIOR HCG-20-11 | UPPER PANEL HCG-20-11 | _ | _ | 1 | | | | | |
| | Q221343000 | REMACHE EXAGONAL M6 | HEXAGONAL RIVET M6 | _ | _ | 4 | | | | | |
| | Q232040000 | ARANDELA A6 | WASHER A6 | _ | _ | 4 | | | | | |
| | Q262040000 | ARANDELA GROW. A6 A.304 | WASHER GROW. A6 A.304 | _ | _ | 4 | | | | | |
| | Q012042000 | TORNILLO EXAGONAL M6x15 | HEXAGONAL BOLT M6x15 | _ | _ | 4 | | | | | |
| | Q152017000 | TORNILLO AMARRE M6X13 A304 | FASTENING BOLT M6X13 A304 | _ | _ | 6 | | | | | |
| 6 | T013047000 | SERIGRAFIA HGC-611 10/11 20/11 | SERIGRAPHY HGC-611 10/11 20/ | 1 | 1 | 1 | | | | | |
| 7 | 3715400000 | JUNTA PANEL PORTAMANDOS | SEAL CONTROL HOLDER PANEL | 3 | 3 | 3 | | | | | |
| | | | | | | | | | | | |
| | | | | | | | | | | | |
| | | | | | | | | | | | |
| | | | | | | | | | | | |
| | | | | | | | | | | | |
| | | | | | | | | | | | |
| | | | | | | | | | | | |

| MOD. | HORNOS | ZONA | MUEBLE | PLANO | C-1982 |
|---|---|---|---|---|---|

| ITEM | CODIGO | DENOMINACION | TEXTO | HGC-6/11 | HGC-10/11 | HGC-20/11 | | | | | NOTAS |
|---|---|---|---|---|---|---|---|---|---|---|---|
| 8 | T082811000 | PORTAMANDOS COMP. HGC-6/11 | CONTROL HOLDER HGC-6 / 11 | 1 | _ | _ | | | | | |
| 8 | T012810000 | PORTAMANDOS COMP. HGC-10/11 | CONTROL HOLDER HGC-10 / 11 | _ | 1 | _ | | | | | |
| 8 | T102817000 | PORTAMANDOS COMP. HGC-20/11 | CONTROL HOLDER HGC-20 / 11 | _ | _ | 1 | | | | | |
| | Q221343000 | REMACHE EXAGONAL M6 | HEXAGONAL RIVET M6 | 2 | 2 | 2 | | | | | |
| | Q221342000 | REMACHE EXAGONAL M5 | HEXAGONAL RIVET M5 | 4 | 4 | 4 | | | | | |
| | Q232040000 | ARANDELA A6 | WASHER A6 | 2 | 2 | 2 | | | | | |
| | Q012042000 | TORNILLO EXAGONAL M6x15 | HEXAGONAL BOLT M6x15 | 2 | 2 | 2 | | | | | |
| | Q262040000 | ARAND.GROW. A6 A.304 | WASHER GROW. A6 A.304 | 2 | 2 | 2 | | | | | |
| | Q152004000 | TORNIL. APLASTADO M5X13 A 304 | FLAT HEADED SCREW M5x13 A 3 | 4 | 4 | 4 | | | | | |
| 9 | T102818000 | PANEL LATERAL IZDO HGC2011 | SIDE PANEL LEFT HGC2011 | _ | _ | 1 | | | | | |
| | Q221343000 | REMACHE EXAGONAL M6 | HEXAGONAL RIVET M6 | _ | _ | 4 | | | | | |
| | Q232040000 | ARANDELA A6 | WASHER A6 | _ | _ | 4 | | | | | |
| | Q262040000 | ARANDELA GROW. A6 A.304 | WASHER GROW. A6 A.304 | _ | _ | 4 | | | | | |
| | Q012042000 | TORNILLO EXAGONAL M6x15 | HEXAGONAL BOLT M6x15 | _ | _ | 4 | | | | | |
| 10 | T082808000 | TAPA DE SEPARACION | DIVIDING COVER | 1 | 1 | 1 | | | | | |
| 11 | T072903000 | PANEL POSTERIOR HCG-6/11 | REAR PANEL HCG-6/11 | 1 | _ | _ | | | | | |
| 11 | R722909000 | PANEL POSTERIOR HCG-10/11 | REAR PANEL HCG-10/11 | _ | 1 | _ | | | | | |
| 11 | T102819000 | PANEL POSTERIOR HGC-20/11 | REAR PANEL HGC-20/11 | _ | _ | 1 | | | | | |
| | Q221342000 | REMACHE EXAGONAL M5 | HEXAGONAL RIVET M5 | 4 | 4 | 4 | | | | | |
| | Q152038000 | TORNILLO AMARRE M5x30 | FASTENING BOLT M5X30 | 4 | 4 | 4 | | | | | |
| | Q221343000 | REMACHE EXAGONAL M6 | HEXAGONAL RIVET M6 | 4 | 4 | 4 | | | | | |
| | Q152017000 | TORNILLO AMARRE M6X13 A304 | FASTENING BOLT M6X13 A304 | 4 | 4 | 4 | | | | | |
| 12 | R672811000 | CANALETA RECOGEAGUAS | WATER COLLECTOR PIPE | 1 | 1 | 1 | | | | | |
| | Q412002000 | REMACHE AVINOX Ø4x10MM | RIVET AVINOX Ø4x10MM | 3 | 4 | 4 | | | | | |
| | | | | | | | | | | | |
| | | | | | | | | | | | |
| | | | | | | | | | | | |
| | | | | | | | | | | | |
| | | | | | | | | | | | |
| | | | | | | | | | | | |
| | | | | | | | | | | | |

N.plano
C-1983

Firma

Fecha
2008-02

Aparato
HORNO HGC-6/11; 10/11

PUERTA

Lamina
2

Fagor Industrial S.Coop.
Onate

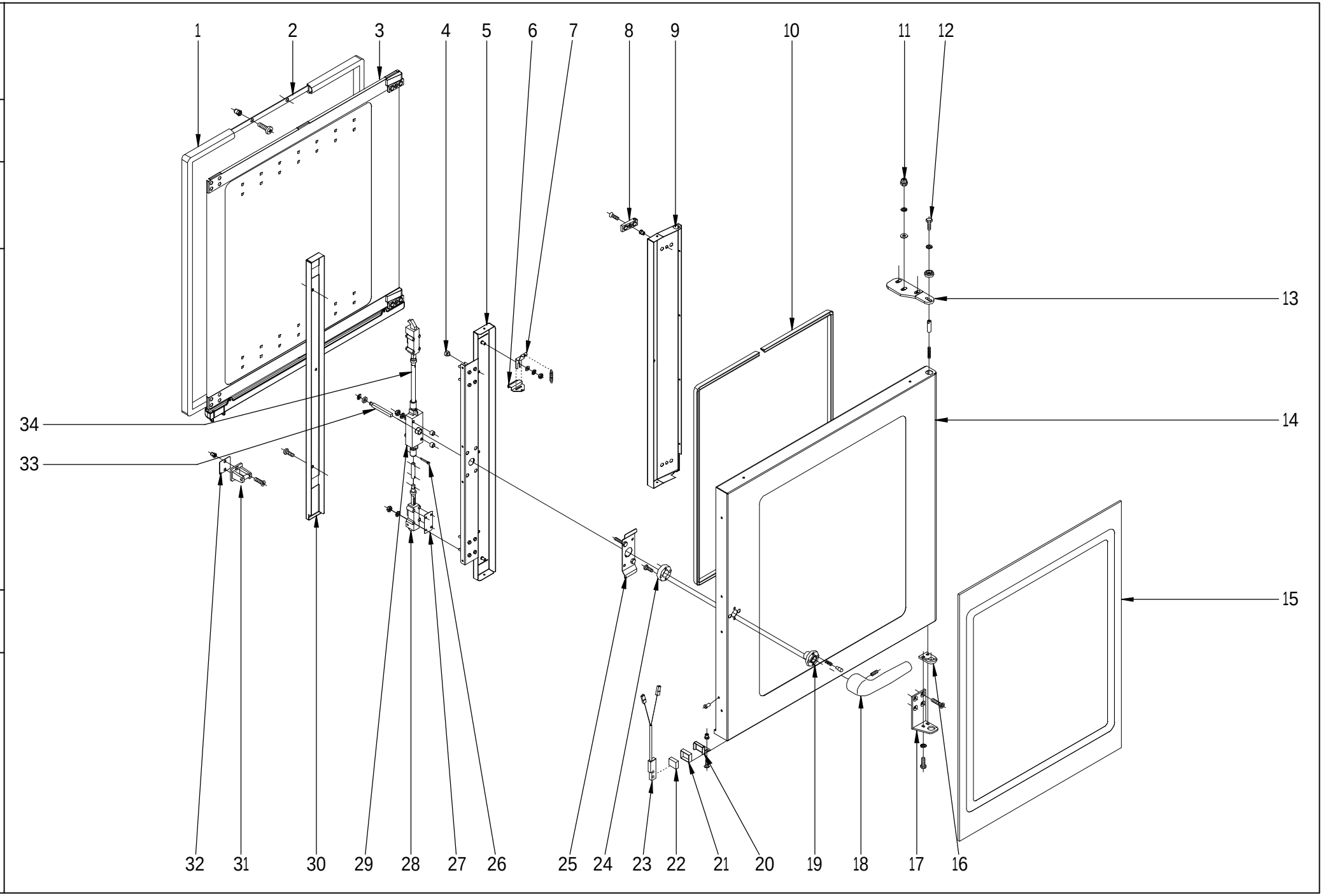

| MOD. | HORNOS | ZONA | PUERTA | PLANO | C-1983 |
|---|---|---|---|---|---|

| ITEM | CODIGO | DENOMINACION | TEXTO | HGC-6/11 | HGC-10/11 | | | | | | NOTAS |
|---|---|---|---|---|---|---|---|---|---|---|---|
| | **1100003129** | **KIT PUERTA 6/11 COMPLETA** | **DOOR KIT 6/11 COMPLETE** | **1** | _ | | | | | | |
| | **1100003131** | **KIT PUERTA 10/11 COMPLETA** | **DOOR KIT 10/11 COMPLETE** | _ | **1** | | | | | | |
| 1 | R660503000 | JUNTA DE PUERTA 6-11 | DOOR SEAL 6-11 | 1 | _ | | | | | | |
| 1 | R670500000 | JUNTA DE PUERTA 10-11 | DOOR SEAL 10-11 | _ | 1 | | | | | | |
| 2 | R660526000 | FIJACION JUNTA COMPLETA 6-11 | COM. SEAL ATTACHMENT 6-11 | 1 | _ | | | | | | |
| 2 | R670513000 | FIJACION JUNTA COMPLETA 10-11 | COM. SEAL ATTACHMENT 10-11 | _ | 1 | | | | | | |
| | Q032021000 | TORNILLO ALOMADO M4X10 | CURVED SCREW M4X10 | 24 | 28 | | | | | | |
| | Q222041000 | REMACHE EXAGONAL M4 (INOX) | HEXAGONAL RIVET M4 (INOX) | 24 | 28 | | | | | | |
| **3** | **1100003130** | **KIT CRISTAL INTERIOR 6/11** | **INTER. GLASS KIT 6/11 COMP.** | **1** | _ | | | | | | |
| **3** | **1100003132** | **KIT CRISTAL INTERIOR 10/11** | **INTER. GLASS KIT 10/11 COMP.** | _ | **1** | | | | | | |
| 4 | R670617000 | TOPE CRISTAL INTERIOR 10/11 | INTERIOR GLASS BUFFER 10/11 | 5 | 6 | | | | | | |
| 5 | R660616000 | CONTRAPUERTA MANILLA 6/11 | DOOR REVERSE HANDLE 6/11 | 1 | _ | | | | | | |
| 5 | R670633000 | CONTRAPUERTA MANILLA 10/11 | DOOR REVERSE HANDLE 10/11 | _ | 1 | | | | | | |
| 6 | R670613000 | PESTILLO 10/11 | LATCH 10/11 | 2 | 2 | | | | | | |
| 7 | R670612000 | BASE DE PESTILLO | LATCH BASE | 2 | 2 | | | | | | |
| | Q302022000 | ARANDELA 16X6X1.2 A.304 | WASHER 16X6X1.2 A.304 | 2 | 2 | | | | | | |
| | Q162040000 | TUERCA EXAGONAL M6 | HEXAGONAL NUT M6 | 2 | 2 | | | | | | |
| | Q242040000 | ARANDELA ABANICO A6 A.304 | FAN WASHER A6 A.304 | 2 | 2 | | | | | | |
| | R660605000 | MUELLE TENSOR | TENSIONING SPRING | 2 | 2 | | | | | | |
| 8 | R670615000 | BASE DE BISAGRA | HINGE BASE | 2 | 2 | | | | | | |
| | Q222011000 | REMACHE EXAGONAL M.5 | HEXAGONAL RIVET M.5 | 2 | 2 | | | | | | |
| | Q042032000 | TORNILLO AVELLANADO M5X15 | COUNTERSUNK BOLT M5x15 | 2 | 2 | | | | | | |
| 9 | R660614000 | CONTRAPUERTA BISAGRA 6/11 | DOOR REVERSE HINGE 6/11 | 1 | _ | | | | | | |
| 9 | R670631000 | CONTRAPUERTA BISAGRA 10/11 | DOOR REVERSE HINGE 10/11 | _ | 1 | | | | | | |
| 10 | 3715200000 | JUNTA CRISTAL | WINDOW SEAL | 2 | 2 | | | | | | |
| 11 | Q212051000 | TUERCA SOMBRERETE M8 | COWL NUT M8 | 3 | 3 | | | | | | |
| | Q242050000 | ARANDELA ABANICO A8 A.304 | FAN WASHER A8 A.304 | 3 | 3 | | | | | | |
| | Q302025000 | ARANDELA 8,4x20x1,5 A.304 | WASHER 8.4x20x1.5 A.304 | 3 | 3 | | | | | | |
| 12 | Q012042000 | TORNILLO EXAGONAL M6x15 | HEXAGONAL BOLT M6x15 | 1 | 1 | | | | | | |
| | Q242040000 | ARANDELA ABANICO A6 A.304 | FAN WASHER A6 A.304 | 1 | 1 | | | | | | |
| | R662807000 | ARANDELA AMARRE | ANCHORAGE WASHER | 1 | 1 | | | | | | |

| MOD. | HORNOS | ZONA | PUERTA | PLANO | C-1983 |
|---|---|---|---|---|---|

| ITEM | CODIGO | DENOMINACION | TEXTO | HGC-6/11 | HGC-10/11 | | | | | | NOTAS |
|---|---|---|---|---|---|---|---|---|---|---|---|
| 13 | T130500000 | BISAGRA SUPERIOR | UPPER HINGE | 1 | 1 | | | | | | |
| | R660534000 | EJE SUPERIOR | UPPER SHAFT | 1 | 1 | | | | | | |
| | Z850519000 | RESORTE 06329 | SPRING 06329 | 1 | 1 | | | | | | |
| 14 | R660612000 | PANEL PUERTA 6/11 | DOOR PANEL 6/11 | 1 | _ | | | | | | |
| 14 | R670629000 | PANEL PUERTA 10-11 | DOOR PANEL 10-11 | _ | 1 | | | | | | |
| | Q412002000 | REMACHE AVINOX Ø4x10MM | RIVET AVINOX Ø4x10MM | 14 | 14 | | | | | | |
| 15 | R660610000 | CRISTAL EXTERIOR 6/11 | EXTERIOR GLASS 6/11 | 1 | _ | | | | | | |
| 15 | R670627000 | CRISTAL EXTERIOR 10/11 | EXTERIOR GLASS 10/11 | _ | 1 | | | | | | |
| 16 | R660549000 | GUIA EJE INFERIOR FUNDIDO | LOWER SHAFT GUIDE CAST IR. | 1 | 1 | | | | | | |
| | Q062040000 | TORNILLO AVELLANADO M6X16 | COUNTERSUNK BOLT M6x16 | 4 | 4 | | | | | | |
| 17 | R660551500 | BISAGRA INFERIOR PLEGADA | LOWER FOLDER HINGE | 1 | 1 | | | | | | |
| | Q242040000 | ARANDELA ABANICO A6 A.304 | FAN WASHER A6 A.304 | 2 | 2 | | | | | | |
| | Q012041000 | TORNILLO EXAGONAL M6x10 A304 | HEXAGONAL BOLT M6x10 A304 | 2 | 2 | | | | | | |
| 18 | T130502000 | MANILLA COMPLETA | COMPLETE HANDLE | 1 | 1 | | | | | | |
| | Q132042000 | VARILLA ROSCADA M6X15 | THREADED ROD M6X15 | 1 | 1 | | | | | | |
| | T130510000 | TAPON Ø 16 BAGAL Ext. | COVER Ø 16 BAGAL Ext. | 1 | 1 | | | | | | |
| 19 | T130515000 | GUIA MANILLA | HANDLE GUIDE | 1 | 1 | | | | | | |
| | T130507000 | PITON ENGANCHE PUERTA | DOOR FASTENER SPIKE | 2 | 2 | | | | | | |
| | T130506000 | RESORTE 34548 | SPRING 34548 | 2 | 2 | | | | | | |
| 20 | T130513000 | SOPORTE IMAN | MAGNET BRACKET | 1 | 1 | | | | | | |
| | Q222011000 | REMACHE EXAGONAL M.5 | HEXAGONAL RIVET M.5 | 1 | 1 | | | | | | |
| | Q032031000 | TORNILLO ALOMADO M5X10 | CURVED SCREW M5X10 | 1 | 1 | | | | | | |
| 21 | Z200507000 | PROTECTOR IMAN | MAGNET PROTECTOR | 1 | 1 | | | | | | |
| 22 | Z200506000 | IMAN | MAGNET | 1 | 1 | | | | | | |
| 23 | Z100522000 | INTERRUPTOR MAGNETICO | MAGNETIC SWITCH | 1 | 1 | | | | | | |
| 24 | T130514000 | SOPORTE RESORTE | SPRING SUPPORT | 1 | 1 | | | | | | |
| | Q032032000 | TORNILLO ALOMADO M5x15 | CURVED SCREW M5X15 | 2 | 2 | | | | | | |
| 25 | T130511000 | SUPLEMENTO SUJ. CERRADURA | ANCHORAGE SUPPL. LOCK | 1 | 1 | | | | | | |
| 26 | Q352001000 | PASADOR DE ALETAS 2X20 | COTTER PIN 2X20 | 2 | 4 | | | | | | |
| 27 | T080503000 | SUPLEMENTO ELEMENTO CIERRE | SUPPLEMENT LOCK ELEMENT | 6 | 6 | | | | | | |
| | | | | | | | | | | | |

| MOD. | HORNOS | ZONA | PUERTA | PLANO | C-1983 |
|---|---|---|---|---|---|

| ITEM | CODIGO | DENOMINACION | TEXTO | HGC-6/11 | HGC-10/11 | | | | | | NOTAS |
|---|---|---|---|---|---|---|---|---|---|---|---|
| 28 | T080504000 | ELEMENTO CIERRE | LOCK ELEMENT | 2 | 2 | | | | | | |
| | Q262040000 | ARANDELA GROW. A6 A.304 | WASHER GROW. A6 A.304 | 6 | 8 | | | | | | |
| | Q162040000 | TUERCA EXAGONAL M6 | HEXAGONAL NUT M6 | 6 | 8 | | | | | | |
| 29 | T130509000 | MECANISMO CIERRE | LOCK MECHANISM | 1 | 1 | | | | | | |
| | Q262040000 | ARAND.GROW. A6 A.304 | WASHER GROW. A6 A.304 | 2 | 2 | | | | | | |
| | Q162040000 | TUERCA EXAGONAL M6 | HEXAGONAL NUT M6 | 2 | 2 | | | | | | |
| | Z608410000 | CASQUILLO AMARRE TECLADO | KEYBOARD ANCHORAGE BUSHI | 2 | 2 | | | | | | |
| 30 | T080502000 | TAPA CIERRE PUERTA 6/11 | DOOR LOCK COVER 6/11 | 1 | _ | | | | | | |
| 30 | T110502000 | TAPA CIERRE PUERTA 20/11 | DOOR LOCK COVER 20/11 | _ | 1 | | | | | | |
| | Q032021000 | TORNILLO ALOMADO M4X10 | CURVED SCREW M4X10 | 4 | 4 | | | | | | |
| | Q222041000 | REMACHE EXAGONAL M4 (INOX) | HEXAGONAL RIVET M4 (INOX) | 4 | 4 | | | | | | |
| 31 | T110506000 | ENGANCHE PUERTA | DOOR FASTENER | 2 | 2 | | | | | | |
| | Q043145000 | TORN. AVELLANADO 6X30 LATON | BRASSCOUNTERSUNK 6X30 | 4 | 4 | | | | | | |
| 32 | R660538000 | CALZO DE ENGANCHE | FASTENER WEDGE | 6 | 6 | | | | | | |
| | Q221343000 | REMACHE EXAGONAL M.6 | HEXAGONAL RIVET M.6 | 4 | 4 | | | | | | |
| 33 | T130508000 | EJE DE MANILLA PUERTA | DOOR HANDLE SHAFT | 1 | 1 | | | | | | |
| | T130505000 | CASQUILLO | BUSHING | 1 | 1 | | | | | | |
| 34 | R020502000 | TUBO ALARGADERA 10-11 | EXTENSION PIPE 10-11 | _ | 2 | | | | | | |

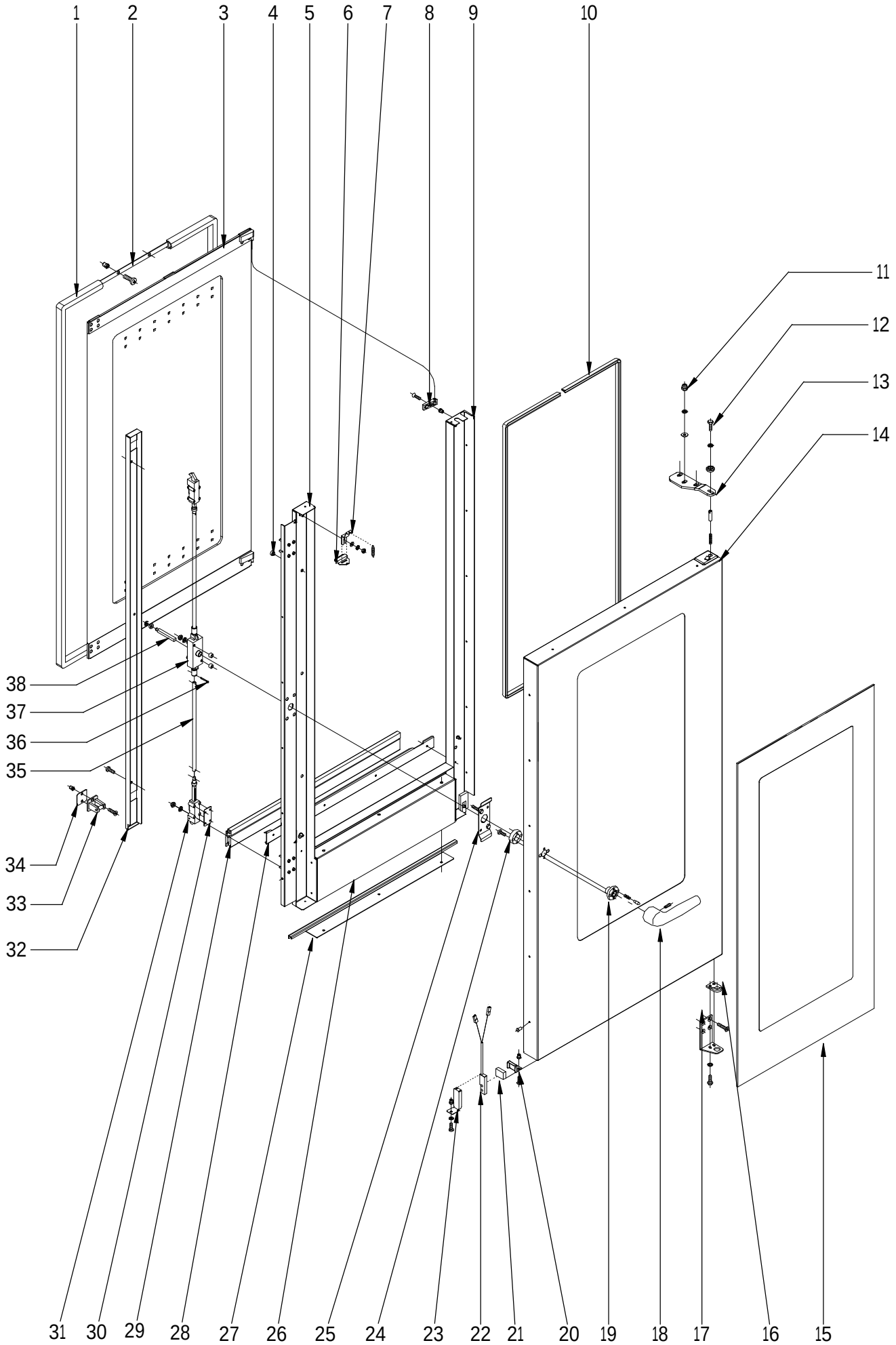


| N plano | Firma | Fecha | Aparato | | Lamina | |
|---|---|---|---|---|---|---|
| C-1984 | | 2008-02 | PUERTA<br>HORNO HGC-20/11 | | 3 | Fagor Industrial S.Coop.<br>Oñate |

| MOD. | HORNOS | ZONA | PUERTA | PLANO | C-1984 |
|---|---|---|---|---|---|

| ITEM | CODIGO | DENOMINACION | TEXTO | HGC-20/11 | | | | | | | NOTAS |
|---|---|---|---|---|---|---|---|---|---|---|---|
| | **1100003126** | **KIT PUERTA 20/11 COMPLETA** | **DOOR KIT 20/11 COMPLETE** | **1** | | | | | | | |
| 1 | R090510000 | JUNTA DE PUERTA 20-11 | DOOR SEAL 20-11 | 1 | | | | | | | |
| 2 | R090512000 | FIJACION JUNTA COMP 20/11 | COMPLETE SEAL ATTACHMENT | 1 | | | | | | | |
| | Q032021000 | TORN.ALOM.M4X10 | CURVED SCREW M4X10 | 40 | | | | | | | |
| | Q222041000 | REMACHE EXAGONAL M4 (INOX) | HEXAGONAL RIVET M4 (INOX) | 40 | | | | | | | |
| **3** | **1100003125** | **KIT CRISTAL INTER. 20/11 COMPL.** | **INTER. GLASS KIT 20/11 COMPL** | **1** | | | | | | | |
| 4 | T300513000 | TOPE CRISTAL INTERIOR 10/21 | INTERIOR GLASS BUFFER 10/21 | 8 | | | | | | | |
| 5 | R090569000 | CONTRAP MANILLA COMPL 20/11 | COMPLETE HANDLE DOOR 20/11 | 1 | | | | | | | |
| 6 | T300514000 | PESTILLO 10/21 | LATCH 10/21 | 2 | | | | | | | |
| 7 | R090558000 | BASE DE PESTILLO | LATCH BASE | 2 | | | | | | | |
| | Q302022000 | ARANDELA 16X6X1.2 A.304 | WASHER 16X6X1.2 A.304 | 2 | | | | | | | |
| | Q162040000 | TUERCA EXAGONAL M6 | HEXAGONAL NUT M6 | 2 | | | | | | | |
| | Q242040000 | ARANDELA ABANICO A6 A.304 | FAN WASHER A6 A.304 | 2 | | | | | | | |
| | R660605000 | MUELLE TENSOR | TENSIONING SPRING | 2 | | | | | | | |
| 8 | R670615000 | BASE DE BISAGRA | HINGE BASE | 2 | | | | | | | |
| | Q222011000 | REMACHE EXAGONAL M.5 | HEXAGONAL RIVET M.5 | 2 | | | | | | | |
| | Q042032000 | TORNILLO AVELLANADO M5X15 | COUNTERSUNK BOLT M5x15 | 2 | | | | | | | |
| 9 | R090567000 | CONTRAPUERTA BISA COMP 20/11 | COMP. HINGE DOOR REVERSE 2 | 1 | | | | | | | |
| 10 | 3715200000 | JUNTA CRISTAL | WINDOW SEAL | 1 | | | | | | | |
| 11 | Q212051000 | TUERCA SOMBRERETE M8 | COWL NUT M8 | 3 | | | | | | | |
| | Q242050000 | ARANDELA ABANICO A8 A.304 | FAN WASHER A8 A.304 | 3 | | | | | | | |
| | Q302025000 | ARANDELA 8,4x20x1,5 A.304 | WASHER 8.4x20x1.5 A.304 | 3 | | | | | | | |
| 12 | Q012042000 | TORNILLO EXAGONAL M6x15 | HEXAGONAL BOLT M6x15 | 1 | | | | | | | |
| | Q242040000 | ARANDELA ABANICO A6 A.304 | FAN WASHER A6 A.304 | 1 | | | | | | | |
| | R662807000 | ARANDELA AMARRE | ANCHORAGE WASHER | 1 | | | | | | | |
| 13 | T300520000 | BISAGRA SUPERIOR | UPPER HINGE | 1 | | | | | | | |
| | R660534000 | EJE SUPERIOR | UPPER SHAFT | 1 | | | | | | | |
| | Z850519000 | RESORTE 06329 | SPRING 06329 | 1 | | | | | | | |
| 14 | R090565000 | PUERTA COMPLETA 20-11 | COMPLETE DOOR 20-11 | 1 | | | | | | | |
| | Q412002000 | REMACHE AVINOX Ø4x10MM | RIVET AVINOX Ø4x10MM | 14 | | | | | | | |
| 15 | R090562000 | CRISTAL EXTERIOR 20/11 | EXTERIOR GLASS 20/11 | 1 | | | | | | | |

| MOD. | HORNOS | ZONA | PUERTA | PLANO | C-1984 |
|---|---|---|---|---|---|

| ITEM | CODIGO | DENOMINACION | TEXTO | HGC-20/11 | | | | | | | NOTAS |
|---|---|---|---|---|---|---|---|---|---|---|---|
| 16 | R660549000 | GUIA EJE INFERIOR FUNDIDO | LOWER SHAFT GUIDE, CAST IRC | 1 | | | | | | | |
| | Q062040000 | TORNILLO AVELLANADO M6X16 | COUNTERSUNK BOLT M6x16 | 4 | | | | | | | |
| 17 | R090561000 | BISAGRA INFERIOR PLEGADA | LOWER FOLDER HINGE | 1 | | | | | | | |
| | Q242040000 | ARANDELA ABANICO A6 A.304 | FAN WASHER A6 A.304 | 2 | | | | | | | |
| | Q012041000 | TORNILLO EXAGONAL M6x10 A304 | HEXAGONAL BOLT M6x10 A304 | 2 | | | | | | | |
| 18 | T130502000 | MANILLA COMPLETA | COMPLETE HANDLE | 1 | | | | | | | |
| | Q132042000 | VARILLA ROSCADA M6X15 | THREADED ROD M6X15 | 1 | | | | | | | |
| | T130510000 | TAPON Ø 16 BAGAL Ext. | COVER Ø 16 BAGAL Ext. | 1 | | | | | | | |
| 19 | T130515000 | GUIA MANILLA | HANDLE GUIDE | 1 | | | | | | | |
| | T490518000 | PITON ENGANCHE PUERTA | DOOR FASTENER SPIKE | 2 | | | | | | | |
| | T130506000 | RESORTE 34548 | SPRING 34548 | 2 | | | | | | | |
| 20 | T300525000 | SOPORTE IMAN | MAGNET BRACKET | 1 | | | | | | | |
| | Q222011000 | REMACHE EXAGONAL M.5 | HEXAGONAL RIVET M.5 | 1 | | | | | | | |
| | Q032031000 | TORNILLO ALOMADO M5X10 | CURVED SCREW M5X10 | 1 | | | | | | | |
| 21 | T300526000 | IMAN | MAGNET | 1 | | | | | | | |
| 22 | Z100522000 | INTERRUPTOR MAGNETICO | MAGNETIC SWITCH | 1 | | | | | | | |
| 23 | T302819000 | SOPORTE MICRO PUERTA | DOOR MICRO SWITCH | 1 | | | | | | | |
| | Q222011000 | REMACHE EXAGONAL M.5 | HEXAGONAL RIVET M.5 | 1 | | | | | | | |
| | Q242030000 | ARANDELA ABANICO A5 A.304 | FAN WASHER A5 A.304 | 1 | | | | | | | |
| | Q152004000 | TORNIL. APLASTADO M5X13 A 304 | FLAT HEADED SCREW M5x13 A 3 | 1 | | | | | | | |
| 24 | T130514000 | SOPORTE RESORTE | SPRING SUPPORT | 1 | | | | | | | |
| | Q032032000 | TORNILLO ALOMADO M5x15 | CURVED SCREW M5X15 | 2 | | | | | | | |
| 25 | T130511000 | SUPLEMENTO SUJ. CERRADURA | ANCHORAGE SUPPL. LOCK | 1 | | | | | | | |
| 26 | R090570000 | CHAPA AMARRE CONTRAP 20/11 | DOOR REVERSE PLATE FASTEN | 1 | | | | | | | |
| 27 | R090571000 | SUPERIOR CIERRE PUERTA 20/11 | DOOR UPPER LOCK 20/11 | 1 | | | | | | | |
| 28 | R090553000 | CHAPA JUNTA CONTRAPUERTA | DOOR REVERSE SEAL PLATE | 1 | | | | | | | |
| 29 | R090551000 | JUNTA CIERRE INFERIOR 20/11 | SEAL LOWER LOCK 20/11 | 1 | | | | | | | |
| 30 | T080503000 | SUPLEMENTO ELEMENTO CIERRE | SUPPLEMENT LOCK ELEMENT | 6 | | | | | | | |
| 31 | T080504000 | ELEMENTO CIERRE | LOCK ELEMENT | 2 | | | | | | | |
| | Q262040000 | ARAND.GROW. A6 A.304 | WASHER GROW. A6 A.304 | 8 | | | | | | | |
| | Q162040000 | TUERCA EXAGONAL M6 | HEXAGONAL NUT M6 | 8 | | | | | | | |

| MOD. | HORNOS | ZONA | PUERTA | PLANO | C-1984 |
|---|---|---|---|---|---|

| ITEM | CODIGO | DENOMINACION | TEXTO | HGC-20/11 | | | | | | | NOTAS |
|---|---|---|---|---|---|---|---|---|---|---|---|
| 32 | R090557000 | TAPA CIERRE PUERTA 20/11 | DOOR LOCK COVER 20/11 | 1 | | | | | | | |
| | Q032021000 | TORNILLO ALOMADO M4X10 | CURVED SCREW M4X10 | 4 | | | | | | | |
| | Q222041000 | REMACHE EXAGONAL M4 (INOX) | HEXAGONAL RIVET M4 (INOX) | 4 | | | | | | | |
| 33 | T110506000 | ENGANCHE PUERTA | DOOR FASTENER | 2 | | | | | | | |
| | Q043145000 | TORN. AVELLANADO 6X30 LATON | HEXAGONAL BRASS COUNTERS | 4 | | | | | | | |
| 34 | R660538000 | CALZO DE ENGANCHE | FASTENER WEDGE | 6 | | | | | | | |
| | Q221343000 | REMACHE EXAGONAL M.6 | HEXAGONAL RIVET M.6 | 4 | | | | | | | |
| 35 | R090514000 | TUBO ALARGADERA 20-11/20-21 | EXTENSION PIPE 20-11/20-21 | 2 | | | | | | | |
| 36 | Q352001000 | PASADOR DE ALETAS 2X20 | COTTER PIN 2X20 | 4 | | | | | | | |
| 37 | T130509000 | MECANISMO CIERRE | LOCK MECHANISM | 1 | | | | | | | |
| | Q262040000 | ARAND.GROW. A6 A.304 | WASHER GROW. A6 A.304 | 2 | | | | | | | |
| | Q162040000 | TUERCA EXAGONAL M6 | HEXAGONAL NUT M6 | 2 | | | | | | | |
| | Z608410000 | CASQUILLO AMARRE TECLADO | KEYBOARD ANCHORAGE BUSHI | 2 | | | | | | | |
| 38 | T490519000 | EJE DE MANILLA PUERTA | DOOR HANDLE SHAFT | 1 | | | | | | | |
| | T130505000 | CASQUILLO | BUSHING | 1 | | | | | | | |

N.plano
C-1985

Firma

Fecha
2008-02

Aparato
HORNOS HGC-6/11; 10/11

MUEBLE INTERIOR

Lamina
4

Fagor Industrial S.Coop.
Oñate

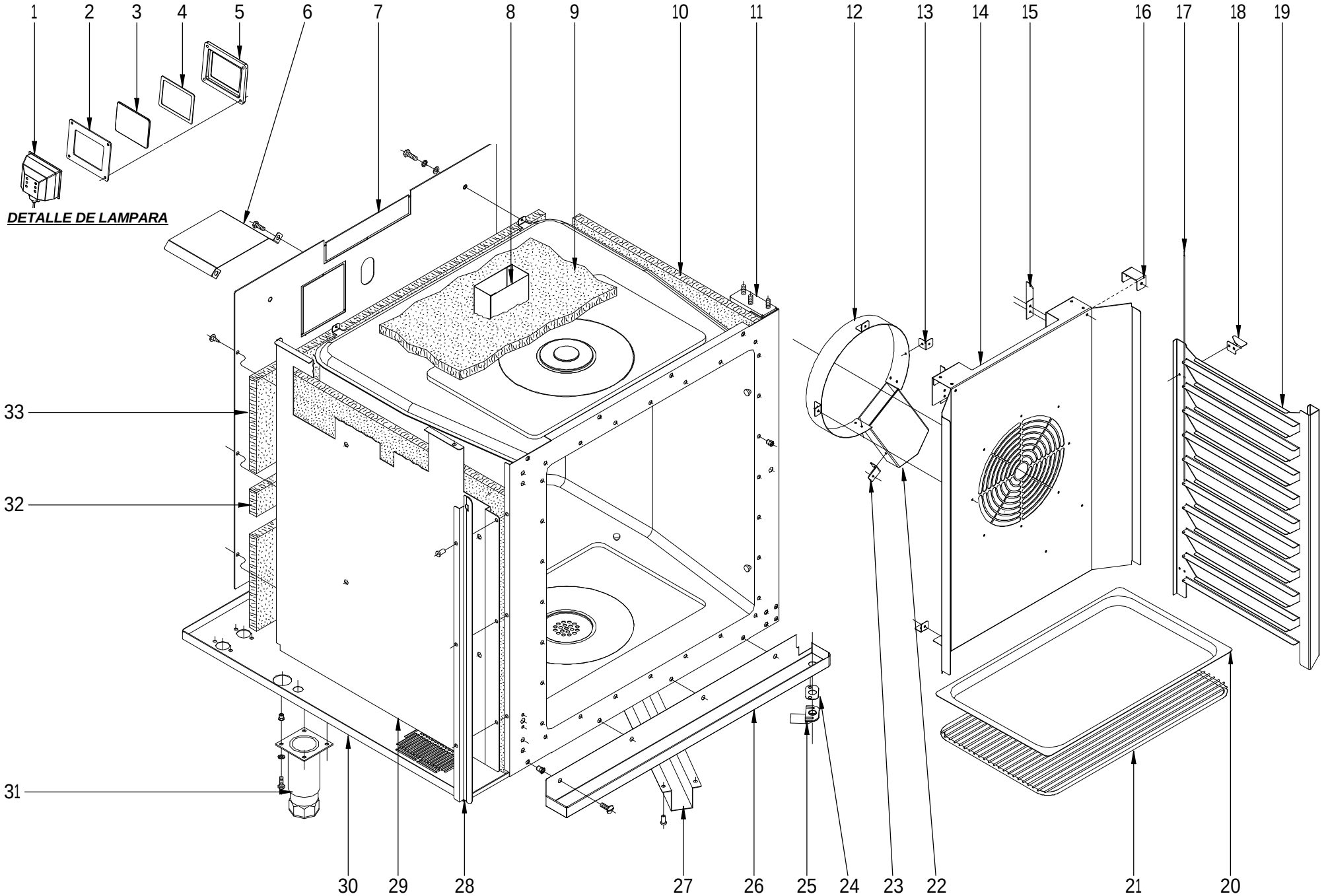

| MOD. | HORNOS | ZONA | MUEBLE INTERIOR | PLANO | C-1985 |
|---|---|---|---|---|---|

| ITEM | CODIGO | DENOMINACION | TEXTO | HGC-6/11 | HGC-10/11 | | | | | | NOTAS |
|---|---|---|---|---|---|---|---|---|---|---|---|
| 1 | T303023000 | PORTALAMPARAS | LAMP HOLDER | 1 | 1 | | | | | | |
| 2 | T303026000 | JUNTA EXTERIOR LAMPARA | LAMP EXTERIOR SEAL | 1 | 1 | | | | | | |
| 3 | T303025000 | CRISTAL LAMPARA | LAMP GLASS | 1 | 1 | | | | | | |
| 4 | T303027000 | JUNTA INTERIOR LAMPARA | LAMP INTERIOR SEAL | 1 | 1 | | | | | | |
| 5 | T303047000 | MARCO LAMPARA | LAMP FRAME | 1 | 1 | | | | | | |
| | R663013000 | LAMPARA 10W-12V | LAMP 10W-12V | 1 | 1 | | | | | | |
| | Q222041000 | REMACHE EXAGONAL M.4 INOX | HEXAGONAL RIVET M4 (INOX) | 4 | 4 | | | | | | |
| | Q032021000 | TORNILLO ALOMADO M4X10 | CURVED SCREW M4X10 | 4 | 4 | | | | | | |
| 6 | T142635000 | TEJADILLO MOTOR | MOTOR ROOF | 1 | 1 | | | | | | |
| | Q412002000 | REMACHE AVINOX Ø4x10MM | RIVET AVINOX Ø4x10MM | 4 | 4 | | | | | | |
| S/N | R142614000 | TEJADILLO SOPLANTE | BLOWER COVER | 1 | 1 | | | | | | |
| 7 | T072705000 | SOP. AISLANTE POST. 6-11 GAS | REAR INSULATION SUP. 6-11 G | 1 | _ | | | | | | |
| 7 | T112631000 | SOP. AISLANTE POST. 10-11 GAS | REAR INSULATION SUP. 10-11 G | _ | 1 | | | | | | |
| | Q221343000 | REMACHE EXAGONAL M.6 | HEXAGONAL RIVET M.6 | 6 | 6 | | | | | | |
| | Q232040000 | ARANDELA A6 | WASHER A6 | 12 | 12 | | | | | | |
| | Q262040000 | ARANDELA GROW. A6 A.304 | WASHER GROW. A6 A.304 | 12 | 12 | | | | | | |
| | Q012042000 | TORNILLO EXAGONAL M6x15 | HEXAGONAL BOLT M6x15 | 12 | 12 | | | | | | |
| 8 | T012605000 | CHIMENEA INTERIOR | INTERIOR FLUEPIPE | 1 | 1 | | | | | | |
| | Q412002000 | REMACHE AVINOX Ø4x10MM | RIVET AVINOX Ø4x10MM | 6 | 6 | | | | | | |
| 9 | R662614000 | AISLANTE 650X650X20 | INSULATION 650X650X20 | 5 | 5 | | | | | | |
| 10 | R662613000 | AISLANTE 650X530X20 | INSULATION 650X530X20 | 5 | _ | | | | | | |
| 10 | R672630000 | AISLANTE 770X650X20 | INSULATION 770X650X20 | _ | 5 | | | | | | |
| 11 | T082622000 | CUERPO COMPLETO HGC-6/11 | COMPLETE BODY HGC -6/11 | 1 | _ | | | | | | |
| 11 | T012625000 | CUERPO COMPLETO HGC-10/11 | COMPLETE BODY HGC -10/11 | _ | 1 | | | | | | |
| | R662636000 | REFUERZO BASE CUERPO INTER. | REINFORCEMENT BASE INTER. E | 1 | 1 | | | | | | |
| | Q162040000 | TUERCA EXAGONAL M6 | HEXAGONAL NUT M6 | 8 | 8 | | | | | | |
| | Q232040000 | ARANDELA A6 | WASHER A6 | 8 | 8 | | | | | | |
| | Q262040000 | ARANDELA GROW. A6 A.304 | WASHER GROW. A6 A.304 | 8 | 8 | | | | | | |
| | Q222041000 | REMACHE EXAGONAL M4 (INOX) | HEXAGONAL RIVET M4 (INOX) | 28 | 28 | | | | | | |
| 12 | T082620000 | SUPLEMENTO CUBREV. HGC6/11 | SUPPLEMENTARY FAN COVER. H | 1 | _ | | | | | | |
| 12 | T012620000 | SUPLEMENTO CUBREV. HGC10/11 | SUPPLEMENTARY FAN COVER. H | _ | 1 | | | | | | |

| MOD. | HORNOS | ZONA | MUEBLE INTERIOR | PLANO | C-1985 |
|---|---|---|---|---|---|

| ITEM | CODIGO | DENOMINACION | TEXTO | HGC-6/11 | HGC-10/11 | | | | | | NOTAS |
|---|---|---|---|---|---|---|---|---|---|---|---|
| 13 | T302643000 | FIJACIÓN SUPLEMENTO | SUPPLEMENTARY FASTENING | 3 | 7 | | | | | | |
| | Q412002000 | REMACHE AVINOX Ø4x10MM | RIVET AVINOX Ø4x10MM | 6 | 14 | | | | | | |
| 14 | R692615000 | CUBREVENTILADOR HGC 6/11 | FAN COVER HGC 6/11 | 1 | _ | | | | | | |
| 14 | R672611000 | CUBREVENTILADOR HGC 10/11 | FAN COVER HGC 10/11 | _ | 1 | | | | | | |
| | Q152014000 | PERNO SOLDADO M5X10 | WELDED BOLT M5X10 | _ | 2 | | | | | | |
| 15 | R092677000 | ESCUADRA SUJECCION | FASTENING BRACKET | 2 | 2 | | | | | | |
| | Q412002000 | REMACHE AVINOX Ø4x10MM | RIVET AVINOX Ø4x10MM | 4 | 4 | | | | | | |
| 16 | R092680000 | FIJACIÓN SUPLEMENTO DOBLE | DOUBLE SUPPL. ATTACHMENT | 2 | _ | | | | | | |
| | Q412002000 | REMACHE AVINOX Ø4x10MM | RIVET AVINOX Ø4x10MM | 4 | _ | | | | | | |
| 17 | R662693000 | TOPE PORTABANDEJAS 6/11 | TRAY HOLDER BUFFER 6/11 | 2 | _ | | | | | | |
| 17 | R672692000 | TOPE PORTABANDEJAS 10/11 | TRAY HOLDER BUFFER 10/11 | _ | 2 | | | | | | |
| 18 | R672691000 | ESCUADRA SUJECCION 6-10/11 | FASTENING BRACKET 6-10/11 | 4 | 4 | | | | | | |
| 19 | R692616000 | GUIA BANDEJAS DERECHA 6/11 | RIGHT TRAY GUIDE 6/11 | 1 | _ | | | | | | |
| 19 | R672612000 | GUIA BANDEJAS DERECHA 10/11 | RIGHT TRAY GUIDE 10/11 | _ | 1 | | | | | | |
| S/Nº | R692617000 | GUIA BANDEJAS IZQUIERDA 6/11 | LEFT TRAY GUIDE 6/11 | 1 | _ | | | | | | |
| S/Nº | R672613000 | GUIA BANDEJAS IZQUIERDA 10/11 | LEFT TRAY GUIDE 10/11 | _ | 1 | | | | | | |
| 20 | R252816000 | BANDEJA 1/1 P:20 | TRAY 1/1 P:20 | 1 | 1 | | | | | | |
| 21 | R672665000 | PARRILLA 1X1 (REF. 2025201) | GRILLE 1X1 (REF. 2025201) | 1 | 1 | | | | | | |
| 22 | T082618000 | CORBATA SOLDADA HGC 6/11 | WELDED BOLT HGC 6/11 | 1 | _ | | | | | | |
| 22 | T012624000 | CORBATA SOLDADA HGC 10/11 | WELDED BOLT HGC 10/11 | _ | 1 | | | | | | |
| | Q232030000 | ARANDELA A5 | WASHER A5 | 2 | 2 | | | | | | |
| | Q242030000 | ARANDELA ABANICO A5 A.304 | FAN WASHER A5 A.304 | 2 | 2 | | | | | | |
| | Q162030000 | TUERCA EXAGONAL M5 | HEXAGONAL NUT M5 | 2 | 2 | | | | | | |
| 23 | T082619000 | FIJACIÓN CORBATA | BOLT FASTENING | 2 | 2 | | | | | | |
| | Q412002000 | REMACHE AVINOX Ø4x10MM | RIVET AVINOX Ø4x10MM | 4 | 4 | | | | | | |
| 24 | T302845000 | JUNTA RECOGEAGUAS | WATER COLLECTOR SEAL | 1 | 1 | | | | | | |
| | Q242030000 | ARANDELA ABANICO A5 A.304 | FAN WASHER A5 A.304 | 2 | 2 | | | | | | |
| | Q213131000 | TUERCA SOMBRERETE M5 | COWL NUT M5 | 2 | 2 | | | | | | |
| 25 | T302844000 | DESAGÜE RECOGEAGUAS | WATER COLLECTOR DRAIN | 1 | 1 | | | | | | |
| | | | | | | | | | | | |
| | | | | | | | | | | | |

| MOD. | HORNOS | ZONA | MUEBLE INTERIOR | PLANO | C-1985 |
|---|---|---|---|---|---|

| ITEM | CODIGO | DENOMINACION | TEXTO | HGC-6/11 | HGC-10/11 | | | | | | NOTAS |
|---|---|---|---|---|---|---|---|---|---|---|---|
| 26 | T112852000 | RECOGEAGUAS COMPL. 6 10/11 | COMPL. WATER COLLECTOR 6 1 | 1 | 1 | | | | | | |
| | Q221343000 | REMACHE EXAGONAL M6 | HEXAGONAL RIVET M6 | 4 | 4 | | | | | | |
| | Q152017000 | TORNILLO AMARRE M6X13 A304 | FASTENING BOLT M6X13 A304 | 4 | 4 | | | | | | |
| 27 | R672833000 | CUBRE DESAGUE 6/11 10/11 | DRAIN COVER 6/11 10/11 | 1 | 1 | | | | | | |
| 28 | R662682000 | PROTECTOR PORTAMANDOS 6/11 | CONTROL HOLDER PROT. 6/11 | 1 | _ | | | | | | |
| 28 | R672674000 | PROTECTOR PORTAMANDOS10/11 | CONTROL HOLDER PROT.10/11 | _ | 1 | | | | | | |
| | Q412002000 | REMACHE AVINOX Ø4x10MM | RIVET AVINOX Ø4x10MM | 2 | 2 | | | | | | |
| 29 | T072614000 | SOPORTE LATER. AISLANTE 6/11 | SIDE SUPP. INSULATION 6/11 | 1 | _ | | | | | | |
| 29 | T112624000 | SOPORTE LATER. AISLANTE 10/11 | SIDE SUPP. INSULATION 10/11 | _ | 1 | | | | | | |
| | Q151301000 | PHILIPS 8X5/8 | PHILIPS 8X5/8 | 3 | 3 | | | | | | |
| 30 | R722900000 | BASE EXT. HORNO HGC6/11-10/11 | EXT.BASE OVEN HGC6/11-10/11 | 1 | 1 | | | | | | |
| 31 | X260151000 | PATA REGULABLE | ADJUSTABLE LEG | 4 | 4 | | | | | | |
| | Q221343000 | REMACHE EXAGONAL M6 | HEXAGONAL RIVET M6 | 16 | 16 | | | | | | |
| | Q242040000 | ARANDELA ABANICO A6 A.304 | FAN WASHER A6 A.304 | 16 | 16 | | | | | | |
| | Q012042000 | TORNILLO EXAGONAL M6x15 | HEXAGONAL BOLT M6x15 | 16 | 16 | | | | | | |
| 32 | R662616000 | AISLANTE 560X60X20 | INSULATION 560X60X20 | 4 | 4 | | | | | | |
| 33 | R672631000 | AISLANTE 670X200X20 | INSULATION 670X200X20 | _ | 2 | | | | | | |

N.plano
C-1986

Firma

Fecha
2008-02

Aparato
HORNO HGC-20/11

MUEBLE INTERIOR

Lamina
5

Fagor Industrial S.Coop.
Oñate

FAGOR

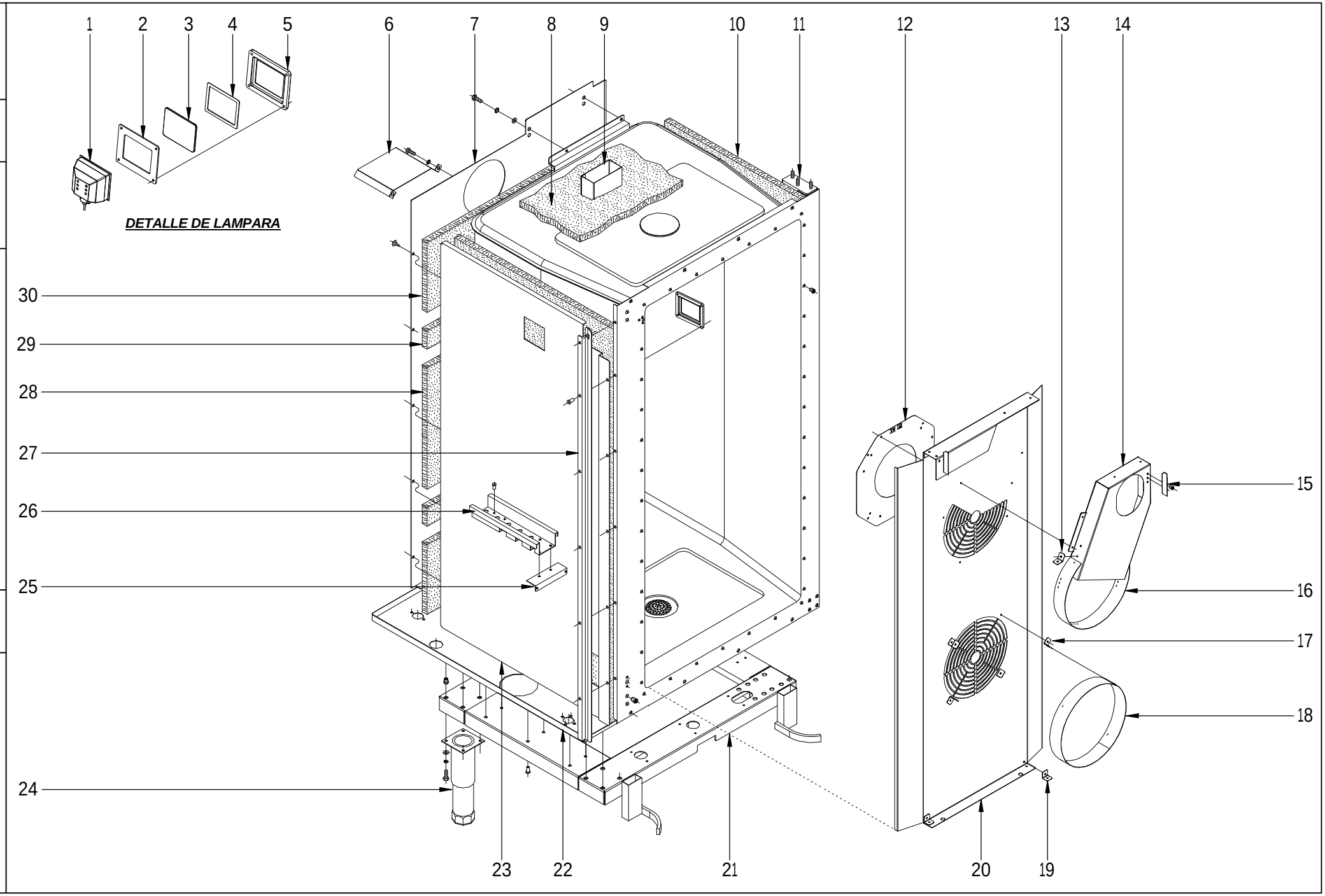


***DETALLE DE LAMPARA***

| MOD. | HORNOS | ZONA | MUEBLE INTERIOR | PLANO | C-1986 |
|---|---|---|---|---|---|

| ITEM | CODIGO | DENOMINACION | TEXTO | HGC-20/11 | | | | | | | NOTAS |
|---|---|---|---|---|---|---|---|---|---|---|---|
| 1 | T303023000 | PORTALAMPARAS | LAMP HOLDER | 2 | | | | | | | |
| 2 | T303026000 | JUNTA EXTERIOR LAMPARA | LAMP EXTERIOR SEAL | 2 | | | | | | | |
| 3 | T303025000 | CRISTAL LAMPARA | LAMP GLASS | 2 | | | | | | | |
| 4 | T303027000 | JUNTA INTERIOR LAMPARA | LAMP INTERIOR SEAL | 2 | | | | | | | |
| 5 | T303047000 | MARCO LAMPARA | LAMP FRAME | 2 | | | | | | | |
| | R663013000 | LAMPARA 10W-12V | LAMP 10W-12V | 2 | | | | | | | |
| | Q222041000 | REMACHE EXAGONAL M.4 INOX | HEXAGONAL RIVET M4 (INOX) | 8 | | | | | | | |
| | Q032021000 | TORNILLO ALOMADO M4X10 | CURVED SCREW M4X10 | 8 | | | | | | | |
| 6 | T142635000 | TEJADILLO MOTOR | MOTOR ROOF | 2 | | | | | | | |
| | Q412002000 | REMACHE AVINOX Ø4x10MM | RIVET AVINOX Ø4x10MM | 4 | | | | | | | |
| S/N | R142614000 | TEJADILLO SOPLANTE | BLOWER COVER | 1 | | | | | | | |
| 7 | T132628000 | SOPORTE AISLANTE POS. 20/11G | REAR INSULATION SUP. 20/11G | 1 | | | | | | | |
| | Q221343000 | REMACHE EXAGONAL M.6 | HEXAGONAL RIVET M.6 | 12 | | | | | | | |
| | Q232040000 | ARANDELA A6 | WASHER A6 | 24 | | | | | | | |
| | Q262040000 | ARAND.GROW. A6 A.304 | WASHER GROW. A6 A.304 | 24 | | | | | | | |
| | Q012042000 | TORNILLO EXAGONAL M6x15 | HEXAGONAL BOLT M6x15 | 24 | | | | | | | |
| 8 | R662614000 | AISLANTE 650X650X20 | INSULATION 650X650X20 | 6 | | | | | | | |
| 9 | T012605000 | CHIMENEA INTERIOR | INTERIOR FLUEPIPE | 1 | | | | | | | |
| | Q412002000 | REMACHE AVINOX Ø4x10MM | RIVET AVINOX Ø4x10MM | 6 | | | | | | | |
| 10 | R092622000 | AISLANTE 1370X650X20 | INSULATION 1370X650X20 | 5 | | | | | | | |
| 11 | T102612000 | CUERPO COMPLETO HGC-20/11 | COMPLETE BODY HGC -20/11 | 1 | | | | | | | |
| 12 | T322607000 | REDUCC. CUBREVENT. 60HzØ160 | FANCOVER REDUC. 60HzØ160 | 2 | | | | | | | SOLO HORNOS A 60 HZ |
| 13 | T142640000 | PESTAÑA CIERRE CUBREVENTIL. | FAN COVER LOCK LATCH | 2 | | | | | | | |
| 14 | T142639000 | CONDUCCION DE HUMOS COMP, | COMP. SMOKE PIPING | 1 | | | | | | | |
| 15 | R092677000 | ESCUADRA SUJECCION | FASTENING BRACKET | 2 | | | | | | | |
| 16 | T132645000 | SUPL. CUBREVENTILAD. ABIERTO | SUPPL. FAN COVER OPEN | 1 | | | | | | | |
| 17 | T302643000 | FIJACIÓN SUPLEMENTO | SUPPLEMENTARY FASTENING | 7 | | | | | | | |
| | Q412002000 | REMACHE AVINOX Ø4x10MM | RIVET AVINOX Ø4x10MM | 14 | | | | | | | |
| 18 | T132644000 | SUPLEMENT. CUBREVENTILADOR | SUPPLEMENT. FAN COVER | 1 | | | | | | | |
| 19 | T302643000 | FIJACIÓN SUPLEMENTO | SUPPLEMENTARY FASTENING | 4 | | | | | | | |
| | Q412002000 | REMACHE AVINOX Ø4x10MM | RIVET AVINOX Ø4x10MM | 8 | | | | | | | |

| MOD. | HORNOS | ZONA | MUEBLE INTERIOR | PLANO | C-1986 |
|---|---|---|---|---|---|

| ITEM | CODIGO | DENOMINACION | TEXTO | HGC-20/11 | | | | | | | NOTAS |
|---|---|---|---|---|---|---|---|---|---|---|---|
| 20 | T102614000 | CUBREVENTILADOR 20/11G | FAN COVER 20/11G | 1 | | | | | | | |
| | Q412002000 | REMACHE AVINOX Ø4x10MM | RIVET AVINOX Ø4x10MM | 23 | | | | | | | |
| 21 | T132831000 | REFUERZO APOYOS COMP.20/11 | COMP. SUPPORT REINFO.20/11 | 1 | | | | | | | |
| | Q412002000 | REMACHE AVINOX Ø4x10MM | RIVET AVINOX Ø4x10MM | 24 | | | | | | | |
| 22 | T102820000 | BASE EXTERIOR DE HGC-20/11 | EXTERIOR BASE HGC- 20 / 11 | 1 | | | | | | | |
| 23 | T132610000 | SOPORTE LATER. AISLANTE 20/11 | SIDE SUPP. INSULATION 20/11 | 1 | | | | | | | |
| | Q151301000 | PHILIPS 8X5/8 | PHILIPS 8X5/8 | 5 | | | | | | | |
| 24 | R092830000 | PATA REF. AA179EOAQ47CCN | LEG REF. AA179EOAQ47CCN | 4 | | | | | | | |
| | Q221343000 | REMACHE EXAGONAL M6 | HEXAGONAL RIVET M6 | 16 | | | | | | | |
| | Q242040000 | ARANDELA ABANICO A6 A.304 | FAN WASHER A6 A.304 | 16 | | | | | | | |
| | Q012042000 | TORNILLO EXAGONAL M6x15 | HEXAGONAL BOLT M6x15 | 16 | | | | | | | |
| 25 | R092693000 | FIJACION PANEL LATERAL | SIDE PANEL ATTACHMENT | 1 | | | | | | | |
| | Q412002000 | REMACHE AVINOX Ø4x10MM | RIVET AVINOX Ø4x10MM | 3 | | | | | | | |
| 26 | R342802000 | GUIA CUADRO ELECTRICO | SWITCHBOARD GUIDE | 1 | | | | | | | |
| 27 | R092670000 | PROTECTOR PORTAMANDOS | CONTROL HOLDER PROTECT. | 1 | | | | | | | |
| | Q412002000 | REMACHE AVINOX Ø4x10MM | RIVET AVINOX Ø4x10MM | 5 | | | | | | | |
| 28 | R092624000 | AISLANTE 670X400X20 | INSULATION 670X400X20 | 2 | | | | | | | |
| 29 | R662616000 | AISLANTE 560X60X20 | INSULATION 560X60X20 | 6 | | | | | | | |
| 30 | R672631000 | AISLANTE 670X200X20 | INSULATION 670X200X20 | 1 | | | | | | | |
| | | | | | | | | | | | |
| | | | | | | | | | | | |
| | | | | | | | | | | | |
| | | | | | | | | | | | |
| | | | | | | | | | | | |
| | | | | | | | | | | | |
| | | | | | | | | | | | |
| | | | | | | | | | | | |
| | | | | | | | | | | | |
| | | | | | | | | | | | |
| | | | | | | | | | | | |

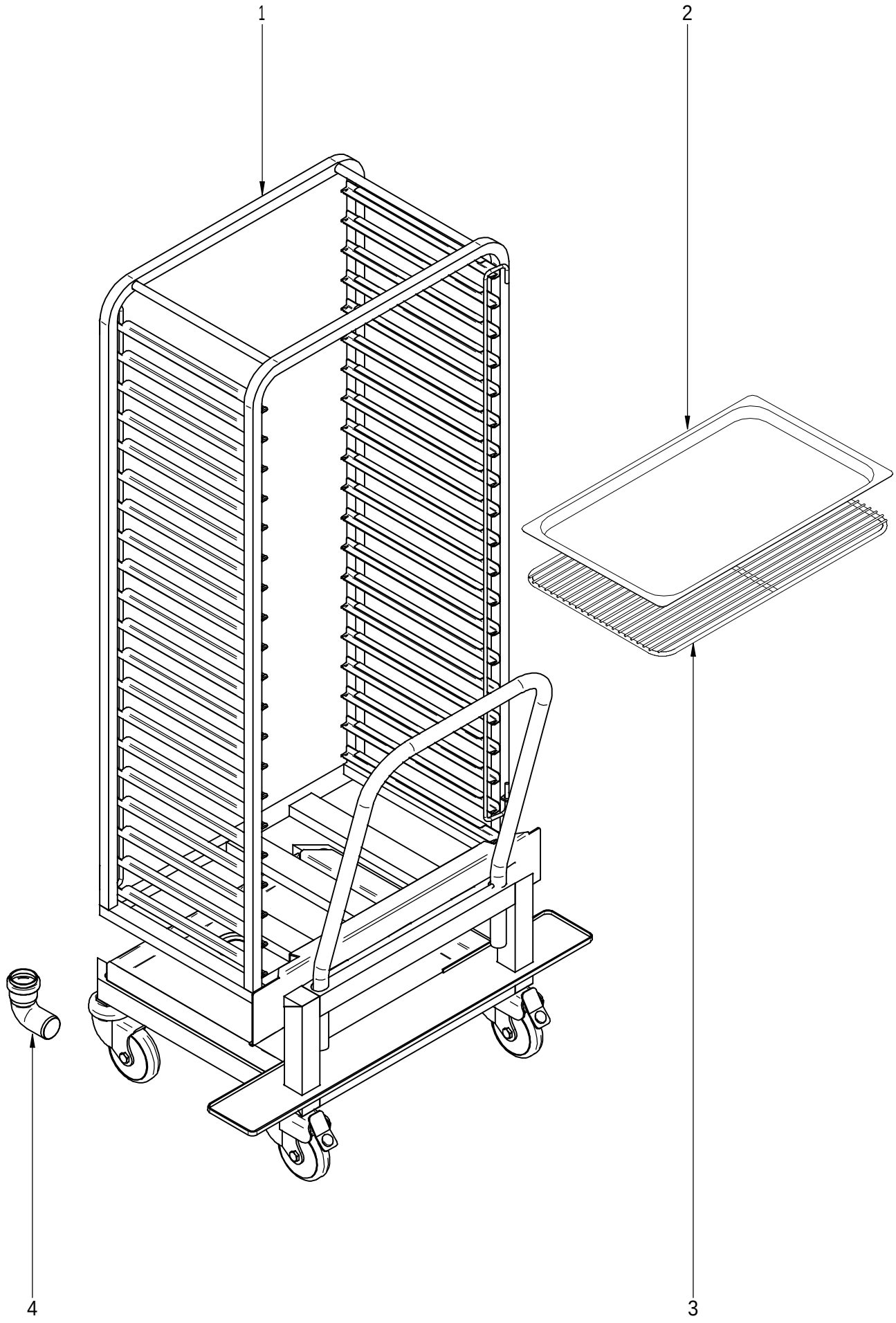


| N plano | Firma | Fecha | Aparato | | Lamina | |
|---|---|---|---|---|---|---|
| C-1987 | | 2008-02 | CARRO<br>HORNO HGC-20/11 | | 6 | Fagor Industrial S.Coop.<br>Oñate |

| MOD. | HORNOS | ZONA | CARRO | PLANO | C-1987 |
|---|---|---|---|---|---|

| ITEM | CODIGO | DENOMINACION | TEXTO | HGC-20/11 | | | | | | | NOTAS |
|---|---|---|---|---|---|---|---|---|---|---|---|
| 1 | R092857000 | CARRO 20/11 | TROLLEY 20/11 | 1 | | | | | | | |
| 2 | R252816000 | BANDEJA 1/1 P:20 | TRAY 1/1 P:20 | 1 | | | | | | | |
| 3 | R672665000 | PARRILLA 1X1 (REF. 2025201) | GRILLE 1X1 (REF. 2025201) | 1 | | | | | | | |
| 4 | T492853000 | CODO DESAGÜE CARRO 20/21 | TROLLEY DRAINAGE L-BEND 20/ | 1 | | | | | | | |

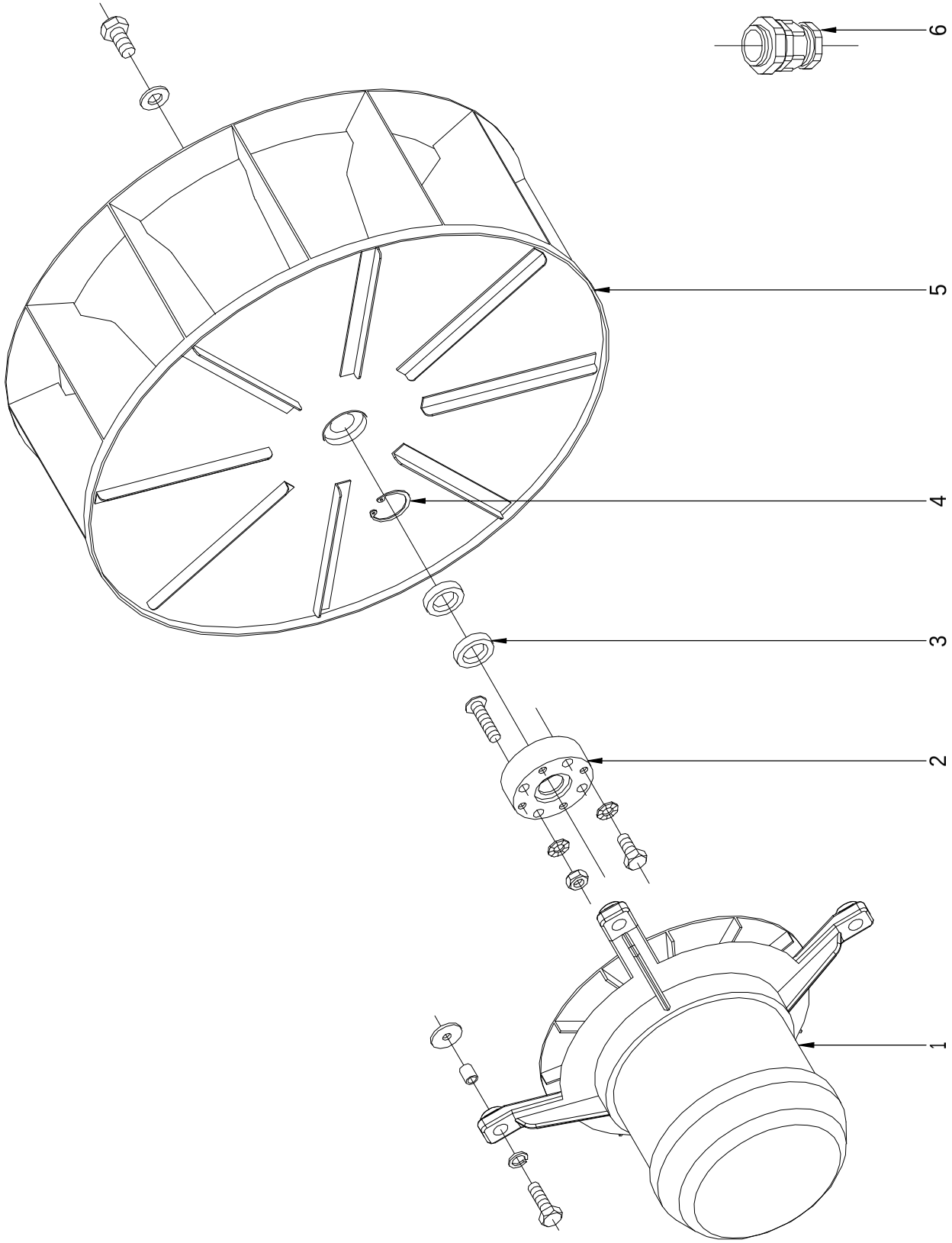


| N plano | Firma | Fecha | Aparato | Lamina | |
|---|---|---|---|---|---|
| C-1988 | | 2008-02 | TURBINA<br>HORNO HGC-6/11; 10/11; 20/11 | 7 | Fagor Industrial S.Coop.<br>Oñate |

| MOD. | HORNOS | ZONA | TURBINA | PLANO | C-1988 |
|---|---|---|---|---|---|

| ITEM | CODIGO | DENOMINACION | TEXTO | HGC-6/11 | HGC-10/11 | HGC-20/11 | | | | | NOTAS |
|---|---|---|---|---|---|---|---|---|---|---|---|
| 1 | R703049000 | MOTOR DOBLE GIRO 1VEL.450W. | DOUBLE ROTATION MOTOR 1VE | 1 | 1 | 2 | | | | | |
| | Q012044000 | TORNILLO EXAGONAL M6X25 | HEXAGONAL BOLT M6x25 | 4 | 4 | 8 | | | | | |
| | Q262040000 | ARANDELA GROW. A6 A.304 | WASHER GROW. A6 A.304 | 4 | 4 | 8 | | | | | |
| | Q301304000 | ARANDELA PLANA 23X6.5X2 | FLAT WASHER 23X6.5X2 | 4 | 4 | 8 | | | | | |
| 2 | R662684000 | CASQUILLO RETEN | SEAL BUSHING | 1 | 1 | 2 | | | | | |
| | R662685000 | JUNTA CASQUILLO RETEN | SEAL BUSHING GASKET | 1 | 1 | 2 | | | | | |
| | Q262040000 | ARANDELA GROW. A6 A.304 | WASHER GROW. A6 A.304 | 4 | 4 | 8 | | | | | |
| | Q162040000 | TUERCA EXAGONAL M6 | HEXAGONAL NUT M6 | 4 | 4 | 8 | | | | | |
| | Q232040000 | ARANDELA A6 | WASHER A6 | 4 | 4 | 8 | | | | | |
| 3 | R662627000 | RETEN 17X28X7V | SEAL 17X28X7V | 2 | 2 | 4 | | | | | |
| 4 | Q302023000 | ANILLO DE SEGURIDAD Ø 28X1.2 | SAFETY RING Ø 28X1.2 | 1 | 1 | 2 | | | | | |
| 5 | T083005000 | TURBINA ALAB. REC. Ø280x127 | FAN ALAB. REC. Ø280x127 | 1 | _ | _ | | | | | |
| 5 | R703050000 | TURBINA REC Ø350X127 HANNING | STRAIGHT FAN Ø350X127 HANNI | _ | 1 | 2 | | | | | |
| | R763010000 | ARANDELA SEGURIDAD HANNING | SAFETY WASHER HANNING | 1 | 1 | 2 | | | | | |
| | Q012063000 | TORNIL. EXAGONAL M10X20 A.304 | HEXAGONAL BOLT M10X20 A.304 | 1 | 1 | 2 | | | | | |
| 6 | R073004000 | PRENSA ESTOPAS | STUFFING BOX | 1 | 1 | 1 | | | | | |

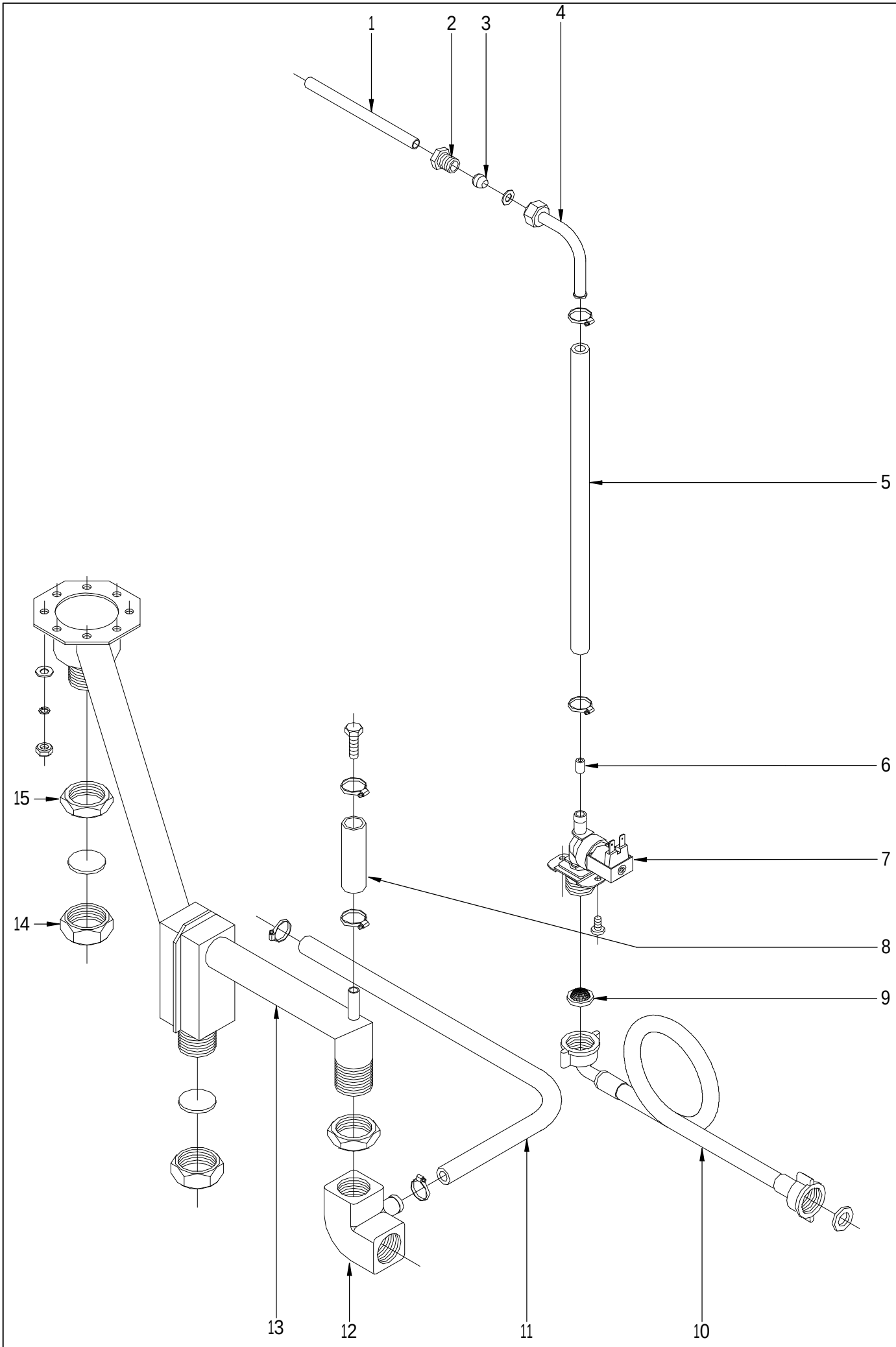


| N plano | Firma | Fecha | Aparato | CIRCUITO DE AGUA | Lamina | |
|---|---|---|---|---|---|---|
| C-1989 | | 2008-02 | HORNO HGC-6/11; 10/11; 20/11 | | 8 | Fagor Industrial S.Coop. FAGOR<br>Oñate |

| MOD. | HORNOS | ZONA | CIRCUITO DE AGUA | PLANO | C-1989 |
|---|---|---|---|---|---|

| ITEM | CODIGO | DENOMINACION | TEXTO | HGC-6/11 | HGC-10/11 | HGC-20/11 | | | | | NOTAS |
|---|---|---|---|---|---|---|---|---|---|---|---|
| 1 | R695033000 | TUBO INYECTOR 6/11 | INJECTOR PIPE 6/11 | 1 | 1 | 1 | | | | | |
| 2 | R695003000 | MANGUITO CIERRE | CLOSING SLEEVE | 1 | 1 | 1 | | | | | |
| 3 | R695004000 | BICONO | BICONE | 1 | 1 | 1 | | | | | |
| | Q306026000 | ARANDELA PLANA 14X8.5X1.5 | FLAT WASHER 14X8.5X1.5 | 1 | 1 | 1 | | | | | |
| 4 | R695017000 | TUBO CONDUCCION AGUA | WATER DUCT PIPE | 1 | 1 | 1 | | | | | |
| 5 | 3676900000 | TUBO GOMA NEGRA Ø17*10 | BLACK RUBBER PIPE Ø17*10 | 1 | 1 | 1 | | | | | |
| | Q881302000 | ABRAZADERA ELASTICA 12*20 | ELASTIC CLAMP 12*20 | 2 | 2 | 2 | | | | | |
| 6 | R665041000 | REGULADOR 0,25L. ROJO | REGULATOR 0.25L. RED | 1 | 1 | _ | | | | | |
| 6 | R715011000 | REGULADOR 0,5L. NARANJA | REGULATOR 0.5L. ORANGE | _ | _ | 1 | | | | | |
| 7 | Z701135000 | ELECTR. SIMP.220V COD.255.208 | ELECTR. SIMP.220V COD.255.208 | 1 | 1 | 1 | | | | | |
| | Q032021000 | TORNILLO ALOMADO M4x10 | CURVED SCREW M4X10 | 2 | 2 | 2 | | | | | |
| 8 | 3676900000 | TUBO GOMA NEGRA Ø17*10 | BLACK RUBBER PIPE Ø17*10 | 1 | 1 | 1 | | | | | |
| | Q881302000 | ABRAZADERA ELASTICA 12*20 | ELASTIC CLAMP 12*20 | 2 | 2 | 2 | | | | | |
| 9 | Z701132000 | FILTRO DE JUNTA N-3 | SEAL FILTER N-3 | 1 | 1 | 1 | | | | | |
| 10 | Z601114000 | MANGUERA ENTRADA AGUA | WATER INTAKE HOSE | 1 | 1 | 1 | | | | | |
| 11 | 3715600000 | TUBO SILICONA 26X18 | SILICONE PIPE 26X18 | 1 | 1 | _ | | | | | |
| | Q881305000 | ABRAZADERA 25-40 | CLAMP 25-40 | 2 | 2 | _ | | | | | |
| 12 | R665080000 | CODO DESAGÜE | DRAINAGE L-BEND | 1 | 1 | _ | | | | | |
| 13 | R725004000 | TUBO DESAGUE HCG-6/101/201 | DRAIN PIPE HCG-6/101/201 | 1 | 1 | 1 | | | | | |
| 14 | R665053000 | TUERCA TAPON 1" | PLUG NUT 1" | 2 | 2 | 2 | | | | | |
| | R015011000 | ARANDELA Ø32 | WASHER Ø32 | 2 | 2 | 2 | | | | | |
| 15 | Q223014000 | CONTRATUERCA 1 LATON | COUNTERNUT 1 BRASS | 2 | 2 | 2 | | | | | |
| | Q162040000 | TUERCA EXAGONAL M6 | HEXAGONAL NUT M6 | 8 | 8 | 8 | | | | | |
| | Q232040000 | ARANDELA A6 | WASHER A6 | 8 | 8 | 8 | | | | | |
| | Q262040000 | ARANDELA GROW. A6 A.304 | WASHER GROW. A6 A.304 | 8 | 8 | 8 | | | | | |
| | | | | | | | | | | | |
| | | | | | | | | | | | |
| | | | | | | | | | | | |
| | | | | | | | | | | | |
| | | | | | | | | | | | |
| | | | | | | | | | | | |

N.plano
C-1990

Firma

Fecha
2008-02

Aparato
HORNO HGC-6/11; 10/11; 20/11

PARTE FUNCIONAL GAS

Lamina
9

Fagor Industrial S.Coop.
Oñate

FAGOR

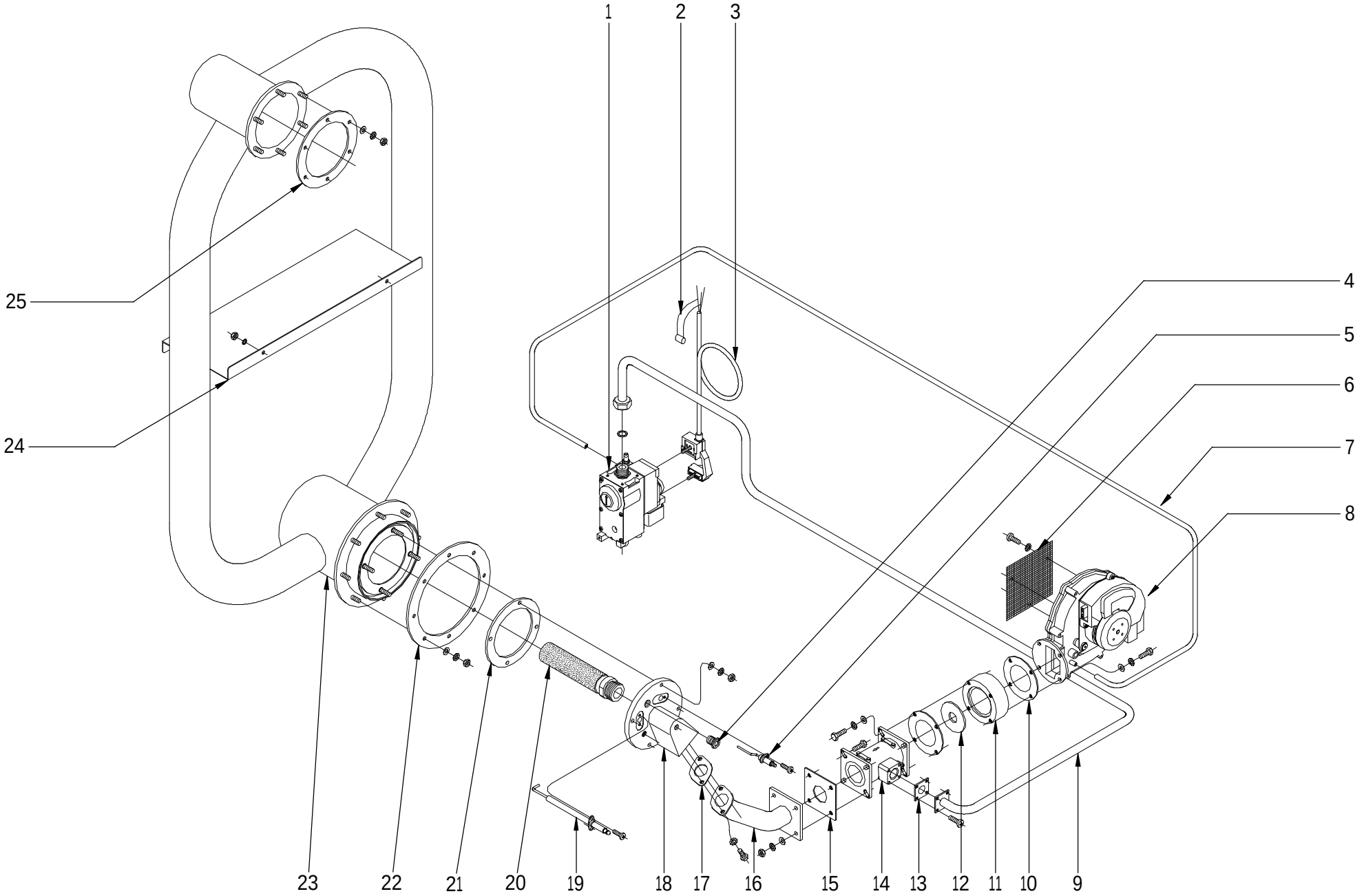

| MOD. | HORNOS | ZONA | PARTE FUNCIONAL DE GAS | PLANO | C-1990 |
|---|---|---|---|---|---|

| ITEM | CODIGO | DENOMINACION | TEXTO | HGC-6/11 | HGC-10/11 | HGC-20/11 | | | | | NOTAS |
|---|---|---|---|---|---|---|---|---|---|---|---|
| 1 | T085010000 | VALVULA REGUL. 6/11 BP 50 HZ | CONTROL VALVE 6/11 BP 50 HZ | 1 | _ | _ | | | | | |
| 1 | T085011000 | VALVULA REGUL. 6/11 GN 50 HZ | CONTROL VALVE 6/11 GN 50 HZ | 1 | _ | _ | | | | | |
| 1 | T085016000 | VALVULA REGUL. 6/11 BP 60 HZ | CONTROL VALVE 6/11 BP 60 HZ | 1 | _ | _ | | | | | |
| 1 | T085017000 | VALVULA REGUL. 6/11 GN 60 HZ | CONTROL VALVE 6/11 GN 60 HZ | 1 | _ | _ | | | | | |
| 1 | T115097000 | VALVULA REGUL. 10/11 BP 50 HZ | CONTROL VALVE 10/11 BP 50 HZ | _ | 1 | _ | | | | | |
| 1 | T115098000 | VALVULA REGUL. 10/11 GN 50 HZ | CONTROL VALVE 10/11 GN 50 HZ | _ | 1 | _ | | | | | |
| 1 | T115100000 | VALVULA REGUL. 10/11 BP 60 HZ | CONTROL VALVE 10/11 BP 60 HZ | _ | 1 | _ | | | | | |
| 1 | T115101000 | VALVULA REGUL. 10/11 GN 60 HZ | CONTROL VALVE 10/11 GN 60 HZ | _ | 1 | _ | | | | | |
| 1 | T135037000 | VALVULA REGUL. 20/11 BP 50 HZ | CONTROL VALVE 20/11 BP 50 HZ | _ | _ | 1 | | | | | |
| 1 | T135039000 | VALVULA REGUL. 20/11 GN 50 HZ | CONTROL VALVE 20/11 GN 50 HZ | _ | _ | 1 | | | | | |
| 1 | T135040000 | VALVULA REGUL. 20/11 BP 60 HZ | CONTROL VALVE 20/11 BP 60 HZ | _ | _ | 1 | | | | | |
| 1 | T135041000 | VALVULA REGUL. 20/11 GN 60 HZ | CONTROL VALVE 20/11 GN 60 HZ | _ | _ | 1 | | | | | |
| 2 | Z233012000 | CONDENSADOR ANTIPARASIT. | ANTI-PARASITE CONDENSER. | 1 | 1 | 1 | | | | | |
| 3 | T085012000 | CONECTOR VALVULA HONEYW. | HONEYW. VALVE CONNECTOR | 1 | 1 | 1 | | | | | |
| 4 | R725015000 | VISOR DE ENCENDIDO | IGNITION WINDOW | 1 | 1 | 1 | | | | | |
| | R725063000 | CRISTAL DE VISOR | WINDOW GLASS | 1 | 1 | 1 | | | | | |
| 5 | T115712000 | ELECTRODO DETECCION 6-10/11 | DETECTION ELECTRODE 6-10/11 | 1 | 1 | _ | | | | | |
| 5 | T135705000 | ELECTRODO DETECCION 20/11 | DETECTION ELECTRODE 20/11 | _ | _ | 1 | | | | | |
| | Q153021000 | TORNILLO ALOMADO M4 X 10 | CURVED SCREW M4 X 10 | 1 | 1 | 1 | | | | | |
| 6 | T115095000 | MALLA VENTILADOR | FAN GRILLE | 1 | 1 | 1 | | | | | |
| | Q032021000 | TORNILLO ALOMADO M4X10 | CURVED SCREW M4X10 | 4 | 4 | 4 | | | | | |
| | Q242020000 | ARANDELA ABANICO A4 | FAN WASHER A4 | 4 | 4 | 4 | | | | | |
| 7 | 3702500000 | TUBO GOMA NEGRO Ø 7*11 | BLACK RUBBER PIPE Ø 7*11 | 1 | 1 | 1 | | | | | |
| 8 | T083000000 | VENTILADOR E.B.M.-RG130 | FAN E.B.M.-RG130 | 1 | 1 | 1 | | | | | |
| 9 | T015000000 | CONDUCCION GAS COMPLETO | COMPLETE GAS PIPING | 1 | 1 | 1 | | | | | |
| | Q306012000 | ARANDELA Ø18X13X1.5 KLING.SIL | WASHER Ø18X13X1.5 KLING.SIL | 2 | 3 | _ | | | | | |
| | Q306024000 | JUNTA Ø18X12.5X1.5 | SEAL Ø18X12.5X1.5 | _ | _ | 3 | | | | | |
| 10 | T115081000 | JUNTA ACOPLAMIENT. SOPLANTE | BLOWER COUPLING SEAL | 2 | 2 | 2 | | | | | |
| 11 | T115076000 | ACOPLAMIEN. VENTILADOR MIXER | MIXER FAN COUPLING | 1 | 1 | 1 | | | | | |
| | | | | | | | | | | | |
| | | | | | | | | | | | |

| MOD. | HORNOS | ZONA | PARTE FUNCIONAL DE GAS | PLANO | C-1990 |
|---|---|---|---|---|---|

| ITEM | CODIGO | DENOMINACION | TEXTO | HGC-6/11 | HGC-10/11 | HGC-20/11 | | | | | NOTAS |
|---|---|---|---|---|---|---|---|---|---|---|---|
| 12 | T085018000 | ARANDELA Ø 14 BP y GN | WASHER Ø 14 BP y GN | 1 | _ | _ | | | | | |
| 12 | T115082000 | ARANDELA Ø 18 BP | WASHER Ø 18 BP | _ | 1 | _ | | | | | |
| 12 | T115083000 | ARANDELA Ø 20 GN | WASHER Ø 20 GN | _ | 1 | _ | | | | | |
| 12 | T135035000 | ARANDELA Ø 22 BP | WASHER Ø 22 BP | _ | _ | 1 | | | | | |
| 12 | T135036000 | ARANDELA Ø 26.3 GN | WASHER Ø 26.3 GN | _ | _ | 1 | | | | | |
| 13 | T115080000 | JUNTA CONDUCCION MIXER | MIXER PIPING SEAL | 1 | 1 | 1 | | | | | |
| | Q032021000 | TORNILLO ALOMADO M4X10 | CURVED SCREW M4X10 | 4 | 4 | 4 | | | | | |
| 14 | T085007000 | MIXER SIT 25Kw. | MIXER SIT 25Kw. | 1 | _ | _ | | | | | |
| 14 | T115075000 | MIXER SIT 35KW | MIXER SIT 35KW | _ | 1 | 1 | | | | | |
| 15 | T115079000 | JUNTA MIXER | MIXER SEAL | 1 | 1 | 1 | | | | | |
| 16 | T115077000 | CONDUCTO GAS TAPA PRINCIPAL | MAIN COVER GAS PIPE | 1 | 1 | 1 | | | | | |
| 17 | T095021000 | JUNTA CONDUCTO | PIPE SEAL | 1 | 1 | 1 | | | | | |
| | Q012032000 | TORNILLO EXAGONAL M5X15 A304 | HEXAGONAL BOLT M5x15 A304 | 2 | 2 | 2 | | | | | |
| | Q242030000 | ARANDELA ABANICO A5 A.304 | FAN WASHER A5 A.304 | 2 | 2 | 2 | | | | | |
| 18 | T085715000 | TAPA PRINCIPAL HCG-6-11 | MAIN COVER HCG-6-11 | 1 | _ | _ | | | | | |
| 18 | T115782000 | TAPA PRINCIPAL | MAIN COVER | _ | 1 | 1 | | | | | |
| | Q242030000 | ARANDELA ABANICO A5 A.304 | FAN WASHER A5 A.304 | 4 | 4 | 4 | | | | | |
| | Q163030000 | TUERCA EXAGONAL M5 LATON | HEXAGONAL NUT M5 BRASS | 4 | 4 | 4 | | | | | |
| 19 | T085714000 | ELECTRODO IGNICION HCG-6-11 | IGNITION ELECTRODE HCG-6-11 | 1 | _ | _ | | | | | |
| 19 | T115781000 | ELECTRODO IGNICION 10/11-10/21 | IGNITION ELECTRODE 10/11-10/2 | _ | 1 | _ | | | | | |
| 19 | T135706000 | ELECTRODO IGNICION 20/11-20/21 | IGNITION ELECTRODE 20/11-20/2 | _ | _ | 1 | | | | | |
| | Q153021000 | TORNILLO ALOMADO M4 X 10 | CURVED SCREW M4 X 10 | 1 | 1 | 1 | | | | | |
| 20 | T085710000 | QUEMADOR FURIGAS 6-11 | BURNER FURIGAS 6-11 | 1 | _ | _ | | | | | |
| 20 | T115710000 | QUEMADOR FURIGAS 10-11/10-21 | BURNER FURIGAS 10-11/10-21 | _ | 1 | _ | | | | | |
| 20 | T145712000 | QUEMADOR FURIGAS 20/11 | BURNER FURIGAS 20/11 | _ | _ | 1 | | | | | |
| 21 | T075013000 | JUNTA DE TAPA PRINCIPAL | MAIN COVER SEAL | 1 | _ | _ | | | | | |
| 21 | R725055000 | JUNTA DE TAPA PRINCIPAL | MAIN COVER SEAL | _ | 1 | 1 | | | | | |
| 22 | T075014000 | JUNTA CAMARA COMBUST. 6/11 | FUEL CHAMBER SEAL 6/11 | 1 | _ | _ | | | | | |
| 22 | R725051000 | JUNTA CAMARA COMBUST. 10/11 | FUEL CHAMBER SEAL 10/11 | _ | 1 | _ | | | | | |
| 22 | T145710000 | JUNTA CAMARA COMBUST. 20/11 | FUEL CHAMBER SEAL 20/11 | _ | _ | 1 | | | | | |
| | | | | | | | | | | | |

| MOD. | HORNOS | ZONA | PARTE FUNCIONAL DE GAS | PLANO | C-1990 |
|---|---|---|---|---|---|

| ITEM | CODIGO | DENOMINACION | TEXTO | HGC-6/11 | HGC-10/11 | HGC-20/11 | | | | | NOTAS |
|---|---|---|---|---|---|---|---|---|---|---|---|
| 23 | T085713000 | CAMARA COMBUS. COMP. 6-11 | COMP. COMBUS. CHAMBER 6-11 | 1 | _ | _ | | | | | |
| 23 | T015700000 | CAMARA COMBUS. COMP. 10-11- | COMP. COMBUS. CHAMBER 10-1 | _ | 1 | _ | | | | | |
| 23 | T155700000 | INTERCAMBIADOR COMPLETO | COMP. HEAT EXCHANGER | _ | _ | 1 | | | | | |
| | Q232040000 | ARANDELA A6 | WASHER A6 | 8 | 8 | 12 | | | | | |
| | Q262040000 | ARANDELA GROW. A6 A.304 | WASHER GROW. A6 A.304 | 8 | 8 | 12 | | | | | |
| | Q163040000 | TUERCA EXAGONAL M6 LATON | HEXAGONAL NUT M6 BRASS | 8 | 8 | 12 | | | | | |
| 24 | T092615000 | SEPARA CENTRAL 20-11/20-21 | CENTRAL SEPARATOR 20-11/20- | _ | _ | 1 | | | | | |
| | Q262040000 | ARANDELA GROW. A6 A.304 | WASHER GROW. A6 A.304 | _ | _ | 2 | | | | | |
| | Q162040000 | TUERCA EXAGONAL M6 | HEXAGONAL NUT M6 | _ | _ | 2 | | | | | |
| 25 | T145711000 | JUNTA COLECT 20-11/20-21 GAS | COLLECTOR SEAL 20-11/20-21 G | _ | _ | 1 | | | | | |

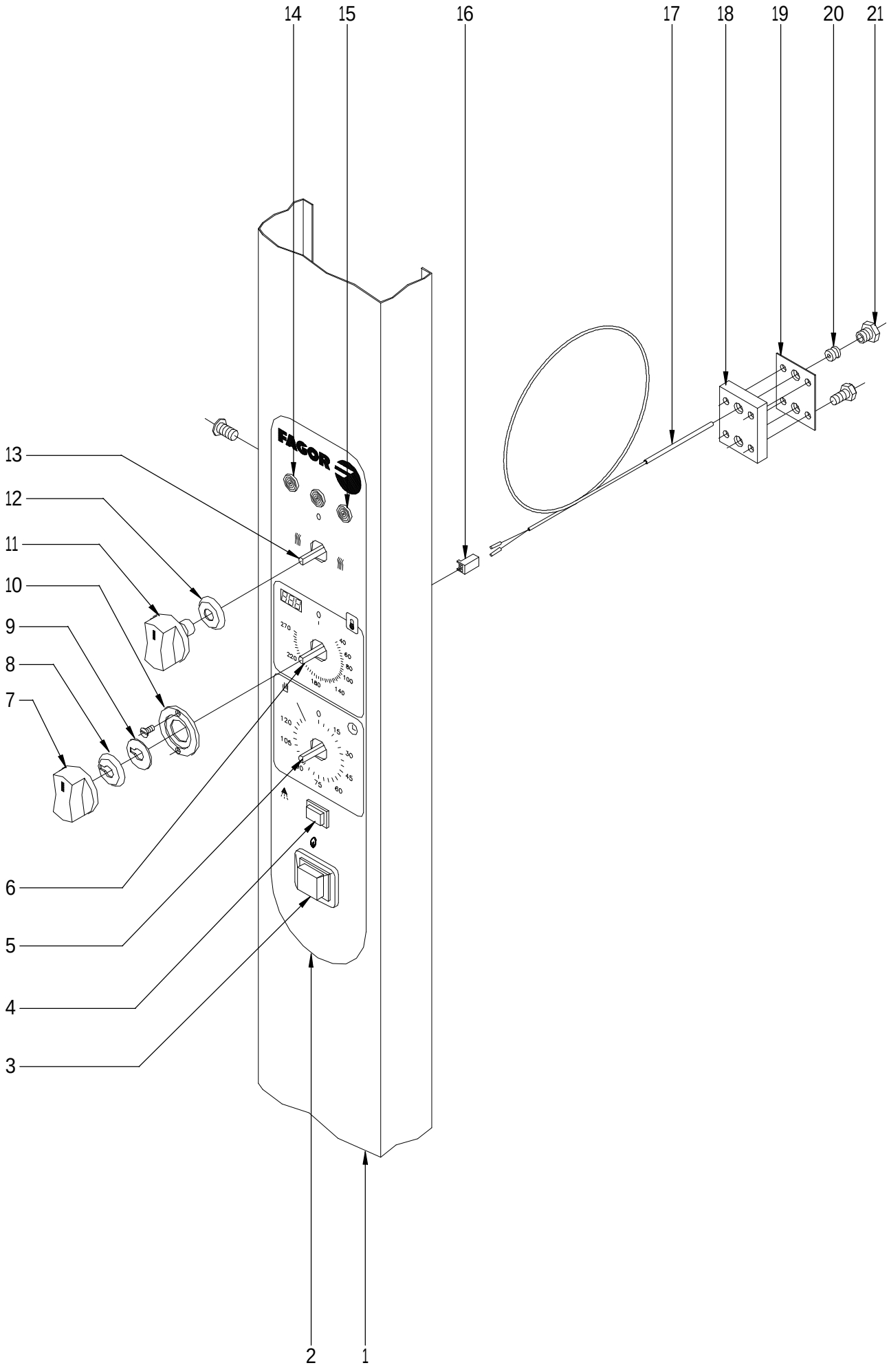


| N plano | Firma | Fecha | Aparato | Lamina | |
|---|---|---|---|---|---|
| C-1991 | | 2008-02 | SISTEMA ELECTRICO PORTAMANDOS<br>HORNO HGC-6/11; 10/11; 20/11 | 10 | Fagor Industrial S.Coop.<br>Oñate |

| MOD. | HORNOS | ZONA | PARTE ELECTRICA PORTAMANDOS | PLANO | C-1991 |
|---|---|---|---|---|---|

| ITEM | CODIGO | DENOMINACION | TEXTO | HGC-6/11 | HGC-10/11 | HGC-20/11 | | | | | NOTAS |
|---|---|---|---|---|---|---|---|---|---|---|---|
| 1 | T082811000 | PORTAMANDOS COMP. HGC-6/11 | CONTROL HOLDER HGC-6 / 11 | 1 | _ | _ | | | | | |
| 1 | T012810000 | PORTAMANDOS COMP. HGC-10/11 | CONTROL HOLDER HGC-10 / 11 | _ | 1 | _ | | | | | |
| 1 | T102817000 | PORTAMANDOS COMP. HGC-20/11 | CONTROL HOLDER HGC-20 / 11 | _ | _ | 1 | | | | | |
| | Q152004000 | TORNILLO APLAST. M5X13 A 304 | MUSHROOM HEAD BOLT M5X13 | 3 | 3 | 3 | | | | | |
| | Q221342000 | REMACHE EXAGONAL M5 | HEXAGONAL RIVET M5 | 2 | 2 | 2 | | | | | |
| | T012803000 | SOPORTE COMPONENTES HCG | COMPONENTS SUPPORT HCG | 1 | 1 | 1 | | | | | |
| 2 | T013047000 | SERIGRAFIA HGC-611 10/11 20/11 | SERIGRAPHY HGC-611 10/11 20/1 | 1 | 1 | 1 | | | | | |
| 3 | Z213033000 | PULSADOR MARCHA | START BUTTON | 1 | 1 | 1 | | | | | |
| 4 | R663032000 | PULSADOR L41M8M959F | BUTTON L41M8M959F | 1 | 1 | 1 | | | | | |
| 5 | R723000000 | TEMPORIZADOR MANUAL | MANUAL TIMER | 1 | 1 | 1 | | | | | |
| 6 | R743013000 | TERMOSTATO ELECTRONICO 270ºC | ELECTRONIC THERMOSTAT 270º | 1 | 1 | 1 | | | | | |
| | R663036000 | FIJACION CIRCUITO | CIRCUIT ATTACHMENT | 4 | 4 | 4 | | | | | |
| 7 | R663063000 | BOTÓN DE MANDO COMPLETO | COMPLETE CONTROL BUTTON | 1 | 1 | 1 | | | | | |
| 8 | R663045000 | JUNTA POTENCIOMETRO | POTENTIOMETER SEAL | 1 | 1 | 1 | | | | | |
| 9 | R662810000 | ARANDELA GUIA | GUIDE WASHER | 1 | 1 | 1 | | | | | |
| 10 | R662809000 | GUIA BOTON DE MANDO | CONTROL BUTTON GUIDE | 1 | 1 | 1 | | | | | |
| | Q151346000 | TORNILLO AVELLANADO M3x5 | COUNTERSUNK BOLT M3x5 | 2 | 2 | 2 | | | | | |
| 11 | R663062000 | BOTÓN DE MANDO COMPLETO | COMPLETE CONTROL BUTTON | 2 | 2 | 2 | | | | | |
| 12 | R663046000 | JUNTA CONMUTADOR | SWITCH SEAL | 2 | 2 | 2 | | | | | |
| 13 | T013001000 | CONMUTADOR FUNCIONES HCG | FUNCTIONS SWITCH HCG | 1 | 1 | 1 | | | | | |
| 14 | R693056000 | PILOTO AMBAR 41227000A4 | AMBER PILOT 41227000A4 | 2 | 2 | 2 | | | | | |
| 15 | R693055000 | PILOTO VERDE 41227000C7 | GREEN PILOT 41227000C7 | 1 | 1 | 1 | | | | | |
| 16 | R663092000 | CONECTOR 2 VIAS | 2-WAY CONNECTOR | 1 | 1 | 1 | | | | | |
| 17 | R663090000 | CONJUNTO TERMOPAR | THERMOCOUPLE UNIT | 1 | 1 | 1 | | | | | |
| 18 | R662659000 | APOYO RACORD SONDA | PROBE CONNECTION SUPPORT | 1 | 1 | 1 | | | | | |
| 19 | R692811000 | JUNTA PASAMUROS DOBLE | DOUBLE FEEDTHROUGH GASKE | 1 | 1 | 1 | | | | | |
| 20 | R662652000 | BICONO CIERRE SONDA | PROBE CLOSING BICONE | 1 | 1 | 1 | | | | | |
| 21 | R662629000 | RACORD CIERRE SONDA | PROBE CLOSING CONNECTION | 1 | 1 | 1 | | | | | |
| | Q032021000 | TORNILLO ALOMADO M4X10 | CURVED SCREW M4X10 | 4 | 4 | 4 | | | | | |
| | Q232020000 | ARANDELA A-4 | WASHER A-4 | 4 | 4 | 4 | | | | | |
| | | | | | | | | | | | |

N.plano
C-1992

Firma

Fecha
2008-02

Aparato
HORNO HGC-6/11; 10/11; 20/11

PANEL CUADRO ELECTRICO

Lamina
11

Fagor Industrial S.Coop.
Onate

FAGOR

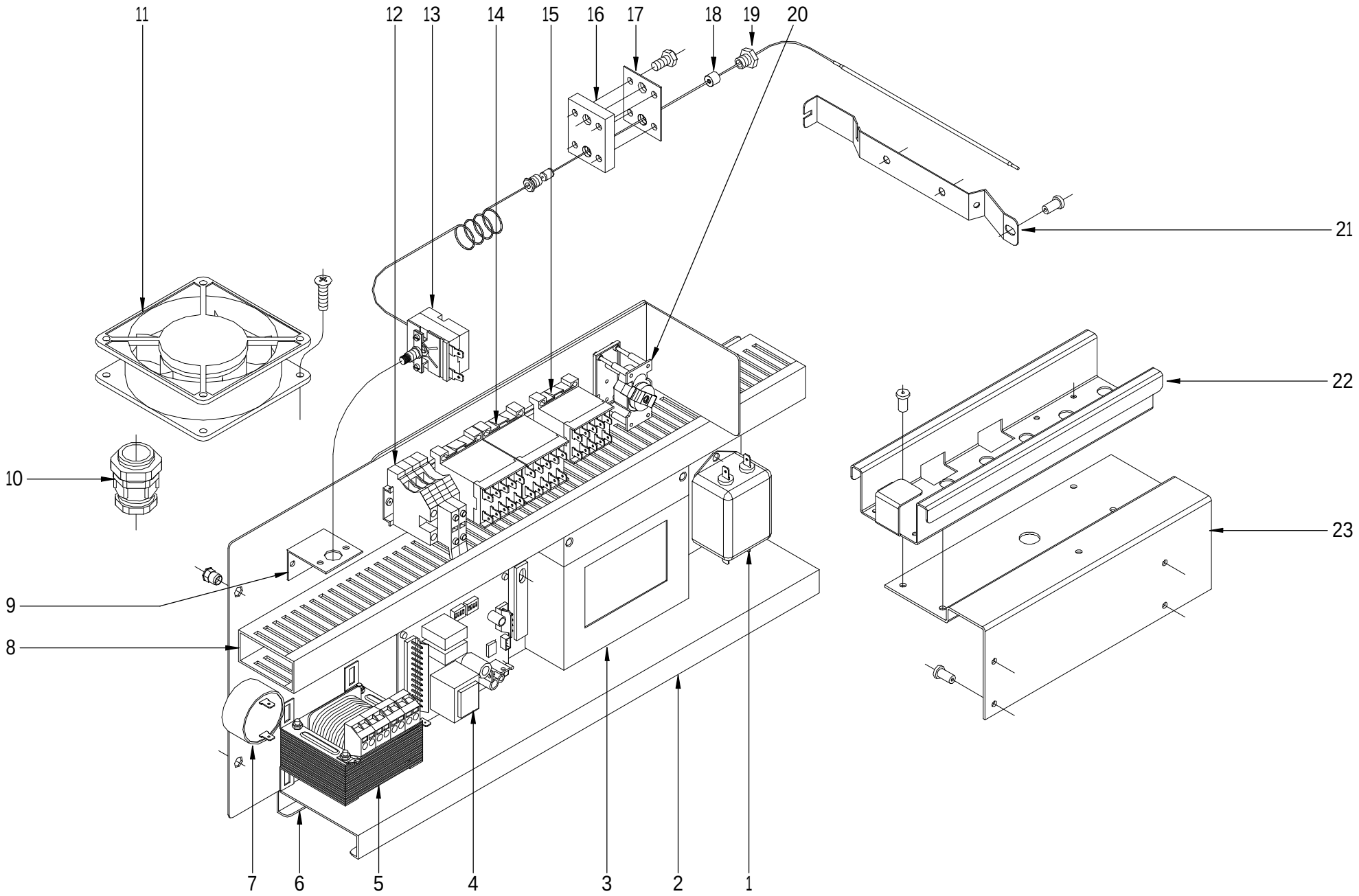

| MOD. | HORNOS | ZONA | CUADRO ELECTRICO | PLANO | C-1992 |
|---|---|---|---|---|---|

| ITEM | CODIGO | DENOMINACION | TEXTO | HGC-6/11 | HGC-10/11 | HGC-20/11 | | | | | NOTAS |
|---|---|---|---|---|---|---|---|---|---|---|---|
| 1 | T113023000 | FILTRO DE ENTRADA | INPUT FILTER | 1 | 1 | 1 | | | | | |
| 2 | T083003000 | PANEL CUADRO HCG | CONTROL PANEL HCG | 1 | 1 | 1 | | | | | |
| | Q221342000 | REMACHE EXAGONAL M5 | HEXAGONAL RIVET M5 | 2 | 2 | 2 | | | | | |
| 3 | Z953004000 | CONTROL COMBUSTION | COMBUSTION CONTROL | 1 | 1 | 1 | | | | | |
| 4 | T303048000 | VARIADOR HORNO GAS 4V | GAS 4V OVEN VARIATOR | 1 | 1 | 1 | | | | | |
| 5 | R503005000 | TRANSFORMADOR | TRANSFORMER | 1 | 1 | 1 | | | | | |
| | Q012021000 | TORNILLO EXAGONAL M4x10 | HEXAGONAL BOLT M4x10 | 4 | 4 | 4 | | | | | |
| | Q162020000 | TUERCA EXAGONAL M4 | HEXAGONAL NUT M4 | 4 | 4 | 4 | | | | | |
| 6 | R723101000 | CONTRAGUIA CUADRO HCG | SWITCHBOARD COUNTERGUIDE | 1 | 1 | 1 | | | | | |
| | Q412002000 | REMACHE AVINOX Ø4x10MM | RIVET AVINOX Ø4x10MM | 7 | 7 | 7 | | | | | |
| 7 | R693067000 | ZUMBADOR | BUZZER | 1 | 1 | 1 | | | | | |
| 8 | 3715520000 | CANALETA UNEX 60.30.77 | PIPING UNEX 60.30.77 | 3 | 3 | 3 | | | | | |
| 9 | R343039000 | SOPORTE TERMOS VAPOR | STEAM THERMOSTAT SUPPORT | 1 | 1 | 1 | | | | | |
| 10 | R073004000 | PRENSA ESTOPAS | STUFFING BOX | 1 | 1 | 1 | | | | | |
| 11 | Z103066000 | VENTILADOR 230V.50-60HZ | FAN 230V.50-60HZ | 2 | 2 | 2 | | | | | |
| | Q081365000 | TORN. ALOMADO M4,8X19 H.ZINC. | HEXAGONAL CURVED M4.8X19 H | 3 | 3 | 6 | | | | | |
| | Q908010000 | BRIDA CREMALLERA | RACK FLANGE | _ | _ | 6 | | | | | |
| 12 | R073005000 | BORNAS PORTA FUSIBLES | FUSE HOLDER TERMINALS | 3 | 3 | 3 | | | | | |
| | R723015000 | FUSIBLE CRISTAL 10A. | GLASS FUSE 10A. | 2 | 2 | 2 | | | | | |
| | P453026000 | BORNE TIERRA 10 WPE-10103.O | EARTH TERMINAL 10 WPE-10103 | 1 | 1 | 1 | | | | | |
| | Z263302000 | BORNA DE PASO AZUL | BLUE THROUGH TERMINAL | 1 | 1 | 1 | | | | | |
| | Z683068000 | SEÑALIZ.DEK-6WEIDMULLER | SIGNS DEK-6WEIDMULLER | 1 | 1 | 1 | | | | | |
| | Z263303000 | TOPE FINAL | END STOP | 1 | 1 | 1 | | | | | |
| 13 | R243016000 | LIMITADOR TEMP | TEMP LIMITER | 1 | 1 | 1 | | | | | |
| 14 | Z743009000 | CONTACT. SIRIUS 3RT10 16-2AP02 | CONTACT. SIRIUS 3RT10 16-2AP | 2 | 2 | 2 | | | | | |
| 15 | Z683087000 | CONTACTOR 3TF20 01-3AL2 230 | CONTACTOR 3TF20 01-3AL2 230 | 1 | 1 | 1 | | | | | |
| | Z403016000 | GUIA CONTACTOR L-100 | CONTACTOR GUIDE L-100 | 1 | 1 | 1 | | | | | |
| | Q412002000 | REMACHE AVINOX Ø4x10MM | RIVET AVINOX Ø4x10MM | 6 | 6 | 6 | | | | | |
| 16 | R662659000 | APOYO RACORD SONDA | PROBE CONNECTION SUPPORT | 1 | 1 | 1 | | | | | |
| 17 | R692811000 | JUNTA PASAMUROS DOBLE | DOUBLE FEEDTHROUGH GASKE | 1 | 1 | 1 | | | | | |
| 18 | R662662000 | JUNTA CIERRE BULBO LIMITADOR | BULB LIMITER CLOSING SEAL | 1 | 1 | 1 | | | | | |

| MOD. | HORNOS | ZONA | CUADRO ELECTRICO | PLANO | C-1992 |
|---|---|---|---|---|---|

| ITEM | CODIGO | DENOMINACION | TEXTO | HGC-6/11 | HGC-10/11 | HGC-20/11 | | | | | NOTAS |
|---|---|---|---|---|---|---|---|---|---|---|---|
| 19 | R662629000 | RACORD CIERRE SONDA | PROBE CLOSING CONNECTION | 1 | 1 | 1 | | | | | |
| | Q032021000 | TORNILLO ALOMADO M4X10 | CURVED SCREW M4X10 | 4 | 4 | 4 | | | | | |
| | Q232020000 | ARANDELA A-4 | WASHER A-4 | 4 | 4 | 4 | | | | | |
| 20 | R763006000 | PROGRAMADOR INVERSION GIRO | INVERT ROTATION PROGRAMME | 1 | 1 | 1 | | | | | |
| 21 | R662683000 | SOPORTE BULBO | BULB SUPPORT | 1 | 1 | 1 | | | | | |
| | Q412002000 | REMACHE AVINOX Ø4x10MM | RIVET AVINOX Ø4x10MM | 3 | 3 | 3 | | | | | |
| 22 | R342802000 | GUIA CUADRO ELECTRICO " | SWITCHBOARD GUIDE" | 1 | 1 | 1 | | | | | |
| | Q412002000 | REMACHE AVINOX Ø4x10MM | RIVET AVINOX Ø4x10MM | 4 | 4 | 4 | | | | | |
| 23 | T083004000 | PEDESTAL CUADRO ELECTRICO | SWITCHBOARD PEDESTAL | 1 | 1 | _ | | | | | |
| 23 | T083041000 | PEDESTAL CUADRO ELECTRICO | SWITCHBOARD PEDESTAL | _ | _ | 1 | | | | | |
| | Q412002000 | REMACHE AVINOX Ø4x10MM | RIVET AVINOX Ø4x10MM | 4 | 4 | 4 | | | | | |

| MOD. | HORNOS | ZONA | VARIOS | PLANO | |
|---|---|---|---|---|---|

| ITEM | CODIGO | DENOMINACION | TEXTO | HGC-6/11 | HGC-10/11 | HGC-20/11 | | | | | |
|---|---|---|---|---|---|---|---|---|---|---|---|
| | T116502000 | FOLLETO DE INSTRUCCIONES | INSTRUCTION LEAFLET | 1 | 1 | 1 | | | | | |
| | T013049000 | ESQUEMA TEORICO HGC-6-10/11 | THEORETICAL DIAGRAM HGC-6- | 1 | 1 | _ | | | | | HC-78230 |
| | T153001000 | ESQUEMA TEORICO HGC-20/11 | THEORETICAL DIAGRAM HGC -2 | _ | _ | 1 | | | | | HC-77666 |
| | T013046000 | ESQUEMA DE MONTAJE HGC | ASSEMBLY DIAGRAM HGC | 1 | 1 | 1 | | | | | HD-12792 |
| | T113028000 | LEYENDA ESQUEMA TEORICO | THEORETICAL DIAGRAM LEGEN | 1 | 1 | 1 | | | | | HC-75483 |
| | T013045000 | INSTALACION ELECTRICA HCG | ELECTRICAL INSTALLATION HCG | 1 | 1 | 1 | | | | | |
| | T113036000 | CABLEADO VARIAD-SOP 6-10/11 | VARIED WIRING-SOP 6-10/11 | 1 | 1 | _ | | | | | |
| | T133033000 | CABLEADO VARIAD-SOP 20-11 | VARIED WIRING-SOP 20-11 | _ | _ | 1 | | | | | |
| | T153002000 | CABLEADO INVERSION GIRO HCG | WIRING INVERT ROTATION HCG | 1 | 1 | 1 | | | | | |
| | T153003000 | MONTAJE INVERSION GIRO HCG | ASSEMBLY INVERT ROTATION H | 1 | 1 | 1 | | | | | |
| | T123010000 | CABLE ENCENDIDO | IGNITION CABLE | 1 | 1 | 1 | | | | | |
| | T113092000 | CABLEADO LUZ INTERIOR 6-10/11 | INTERIOR LIGHT WIRING 6-10/11 | 1 | 1 | _ | | | | | |
| | T113093000 | CABLEADO LUZ INTERIOR 20/11 | INTERIOR LIGHT WIRING 20/11 | _ | _ | 1 | | | | | |
| | T133001000 | CABLEADO CONEX. 2 MOTORES | CONNECT. WIRING 2 MOTOR | _ | _ | 1 | | | | | |
| | | | | | | | | | | | |
| | | | | | | | | | | | |
| | | | | | | | | | | | |
| | | | | | | | | | | | |
| | | | | | | | | | | | |
| | | | | | | | | | | | |
| | | | | | | | | | | | |
| | | | | | | | | | | | |
| | | | | | | | | | | | |
| | | | | | | | | | | | |
| | | | | | | | | | | | |
| | | | | | | | | | | | |
| | | | | | | | | | | | |
| | | | | | | | | | | | |
| | | | | | | | | | | | |
| | | | | | | | | | | | |
| | | | | | | | | | | | |

| MOD. | HORNOS | ZONA | PIEZAS ESPECIFICAS PARA LOS DISTINTOS GASES Y DIFERENTES FRECUENCIAS | PLANO | |
|---|---|---|---|---|---|

| ITEM | CODIGO | DENOMINACION | TEXTO | HGC-6/11 | HGC-10/11 | HGC-20/11 | | | | | |
|---|---|---|---|---|---|---|---|---|---|---|---|
| | | **BUTANO PROPANO 50 HZ** | **BUTANE PROPANE 50 HZ** | | | | | | | | |
| 1 | T085010000 | VALVULA REGUL. 6/11 BP 50 HZ | CONTROL VALVE 6/11 BP 50 HZ | 1 | _ | _ | | | | | C-1990 |
| 1 | T115097000 | VALVULA REGUL. 10/11 BP 50 HZ | CONTROL VALVE 10/11 BP 50 HZ | _ | 1 | _ | | | | | C-1990 |
| 1 | T135037000 | VALVULA REGUL. 20/11 BP 50 HZ | CONTROL VALVE 20/11 BP 50 HZ | _ | _ | 1 | | | | | C-1990 |
| 12 | T085018000 | ARANDELA Ø 14 BP y GN | WASHER Ø 14 BP y GN | 1 | _ | _ | | | | | C-1990 |
| 12 | T115082000 | ARANDELA Ø 18 BP | WASHER Ø 18 BP | _ | 1 | _ | | | | | C-1990 |
| 12 | T135035000 | ARANDELA Ø 22 BP | WASHER Ø 22 BP | _ | _ | 1 | | | | | C-1990 |
| | | | | | | | | | | | |
| | | | | | | | | | | | |
| | | **BUTANO PROPANO 60 HZ** | **BUTANE PROPANE 60 HZ** | | | | | | | | |
| S/Nº | T322607000 | REDUCC. CUBREVENTOR 60Hz | FAN COVER REDUC. 60 Hz. | _ | 1 | _ | | | | | C-1985 |
| 12 | T322607000 | REDUCC. CUBREVENTOR 60Hz | FAN COVER REDUC. 60 Hz. | _ | _ | 2 | | | | | C-1986 |
| 1 | T085016000 | VALVULA REGUL. 6/11 BP 60 HZ | CONTROL VALVE 6/11 BP 60 HZ | 1 | _ | _ | | | | | C-1990 |
| 1 | T115100000 | VALVULA REGUL. 10/11 BP 60 HZ | CONTROL VALVE 10/11 BP 60 HZ | _ | 1 | _ | | | | | C-1990 |
| 1 | T135040000 | VALVULA REGUL. 20/11 BP 60 HZ | CONTROL VALVE 20/11 BP 60 HZ | _ | _ | 1 | | | | | C-1990 |
| 12 | T085018000 | ARANDELA Ø 14 BP y GN | WASHER Ø 14 BP y GN | 1 | _ | _ | | | | | C-1990 |
| 12 | T115082000 | ARANDELA Ø 18 BP | WASHER Ø 18 BP | _ | 1 | _ | | | | | C-1990 |
| 12 | T135035000 | ARANDELA Ø 22 BP | WASHER Ø 22 BP | _ | _ | 1 | | | | | C-1990 |
| | | | | | | | | | | | |
| | | | | | | | | | | | |
| | | **GAS NATURAL 50 HZ** | **NATURAL GAS 50 HZ** | | | | | | | | |
| 1 | T085011000 | VALVULA REGUL. 6/11 GN 50 HZ | CONTROL VALVE 6/11 GN 50 HZ | 1 | _ | _ | | | | | C-1990 |
| 1 | T115098000 | VALVULA REGUL. 10/11 GN 50 HZ | CONTROL VALVE 10/11 GN 50 HZ | _ | 1 | _ | | | | | C-1990 |
| 1 | T135039000 | VALVULA REGUL. 20/11 GN 50 HZ | CONTROL VALVE 20/11 GN 50 HZ | _ | _ | 1 | | | | | C-1990 |
| 12 | T085018000 | ARANDELA Ø 14 BP y GN | WASHER Ø 14 BP y GN | 1 | _ | _ | | | | | C-1990 |
| 12 | T115083000 | ARANDELA Ø 20 GN | WASHER Ø 20 GN | _ | 1 | _ | | | | | C-1990 |
| 12 | T135036000 | ARANDELA Ø 26.3 GN | WASHER Ø 26.3 GN | _ | _ | 1 | | | | | C-1990 |
| | | | | | | | | | | | |
| | | | | | | | | | | | |
| | | | | | | | | | | | |
| | | | | | | | | | | | |

| MOD. | HORNOS | ZONA | PIEZAS ESPECIFICAS PARA LOS DISTINTOS GASES Y DIFERENTES FRECUENCIAS | PLANO | |
|---|---|---|---|---|---|

| ITEM | CODIGO | DENOMINACION | TEXTO | HGC-6/11 | HGC-10/11 | HGC-20/11 | | | | | |
|---|---|---|---|---|---|---|---|---|---|---|---|
| | | **GAS NATURAL 60 HZ** | **NATURAL GAS 60 HZ** | | | | | | | | |
| S/Nº | T322607000 | REDUCC. CUBREVENTOR 60Hz | FAN COVER REDUC. 60 Hz. | _ | 1 | _ | | | | | C-1985 |
| 12 | T322607000 | REDUCC. CUBREVENTOR 60Hz | FAN COVER REDUC. 60 Hz. | _ | _ | 2 | | | | | C-1986 |
| 1 | T085017000 | VALVULA REGUL. 6/11 GN 60 HZ | CONTROL VALVE 6/11 GN 60 HZ | 1 | _ | _ | | | | | C-1990 |
| 1 | T115101000 | VALVULA REGUL. 10/11 GN 60 HZ | CONTROL VALVE 10/11 GN 60 HZ | _ | 1 | _ | | | | | C-1990 |
| 1 | T135041000 | VALVULA REGUL. 20/11 GN 60 HZ | CONTROL VALVE 20/11 GN 60 HZ | _ | _ | 1 | | | | | C-1990 |
| 12 | T085018000 | ARANDELA Ø 14 BP y GN | WASHER Ø 14 BP y GN | 1 | _ | _ | | | | | C-1990 |
| 12 | T115083000 | ARANDELA Ø 20 GN | WASHER Ø 20 GN | _ | 1 | _ | | | | | C-1990 |
| 12 | T135036000 | ARANDELA Ø 26.3 GN | WASHER Ø 26.3 GN | _ | _ | 1 | | | | | C-1990 |

| MOD. | HORNOS | ZONA | PIEZAS ESPECIFICAS PARA VAUBAN | PLANO | C-1982 |
|---|---|---|---|---|---|

| ITEM | CODIGO | DENOMINACION | TEXTO | VCG-6/11 | VCG-10/11 | VCG-20/11 | | | | | |
|---|---|---|---|---|---|---|---|---|---|---|---|
| | | **PIEZAS A ELIMINAR** | **PARTS TO BE REMOVED** | | | | | | | | |
| 6 | T013047000 | SERIGRAFIA HGC-611 10/11 20/11 | SERIGRAPHY HGC-611 10/11 20/ | 1 | 1 | 1 | | | | | |
| | T116502000 | FOLLETO DE INSTRUCCIONES | INSTRUCTION LEAFLET | 1 | 1 | 1 | | | | | |
| | | | | | | | | | | | |
| | | | | | | | | | | | |
| | | | | | | | | | | | |
| | | | | | | | | | | | |
| | | | | | | | | | | | |
| | | | | | | | | | | | |
| | | | | | | | | | | | |
| | | | | | | | | | | | |
| | | | | | | | | | | | |
| | | | | | | | | | | | |
| | | **PIEZAS A INTRODUCIR** | **PARTS TO BE INCLUDED** | | | | | | | | |
| 6 | T013048000 | SERIGRAFIA VAUBAN VCG-10/11 | SERIGRAPHY VAUBAN VCG-10/1 | 1 | 1 | 1 | | | | | |
| | T116520000 | FOLLETO DE INSTRUCCIONES | INSTRUCTION LEAFLET | 1 | 1 | 1 | | | | | |
| | | | | | | | | | | | |
| | | | | | | | | | | | |
| | | | | | | | | | | | |
| | | | | | | | | | | | |
| | | | | | | | | | | | |
| | | | | | | | | | | | |
| | | | | | | | | | | | |
| | | | | | | | | | | | |
| | | | | | | | | | | | |
| | | | | | | | | | | | |
| | | | | | | | | | | | |
| | | | | | | | | | | | |
| | | | | | | | | | | | |
| | | | | | | | | | | | |

# HGC - 10 / 11 HGC - 6 / 11

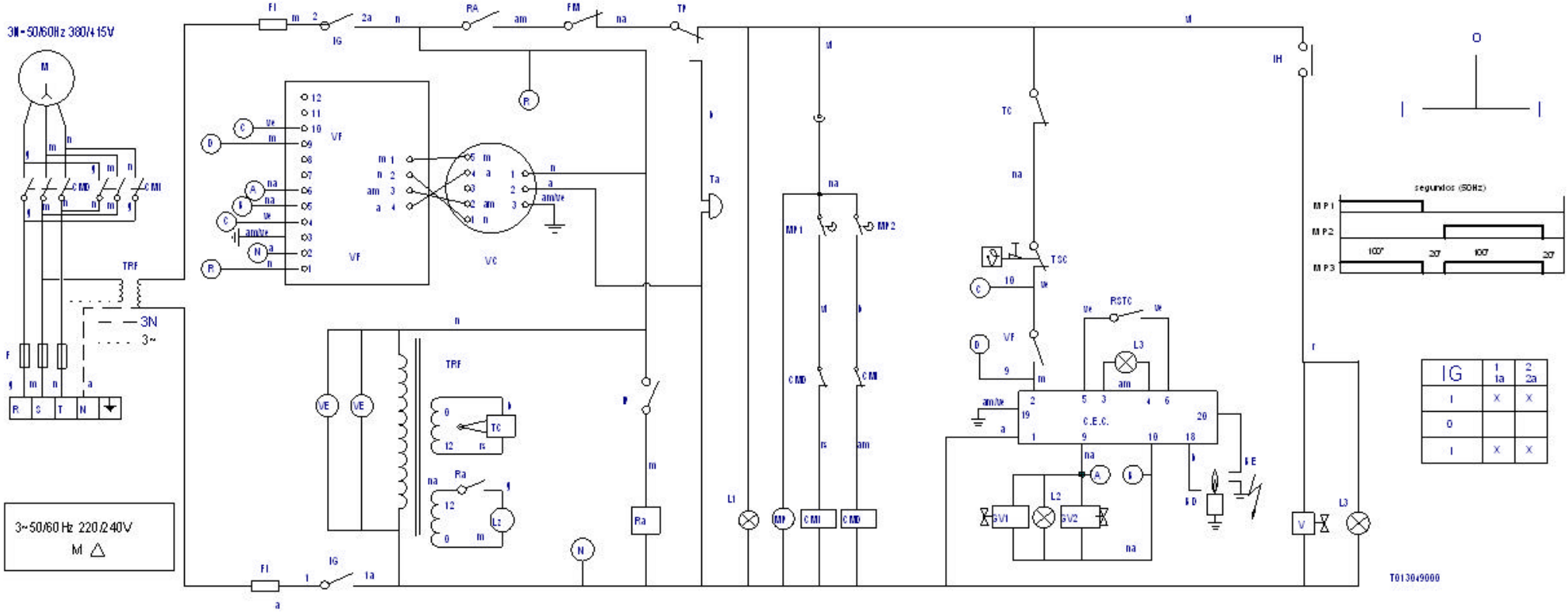


| IG | 1 1a | 2 2a |
|---|---|---|
| I | X | X |
| 0 | | |
| I | X | X |

| | | | | | |
|---|---|---|---|---|---|
| | ESQUEMA TEORICO ADHESIVO HCG | | T013049000 | | |
| Nº | Pieza | Material | Nº Clasificacion | Acabado | |
| Nº | Modificacion | Propuesta de | Fecha | Tolerancias generales | |
| | | | | <5± | 50-100± : |
| | | | | 5-25± : | >100± |
| | | | | 25-50± : | ○/± |

| | Firma | Fecha |
|---|---|---|
| Dibujado | M.Mallio | 19-09-2005 |
| Proyectado | M.Mallio | 19-09-2005 |
| Comprobado | | 22-09-2005 |
| Escala | | |

FAGOR

Fagor Industrial,Koop.Elk, Mugatua

Mecanizado superficial

HORNOS HCG

Plano numero HC-78230

Sustituye al Nº

Sustituido por

# HCG - 20/21 HCG - 20/11

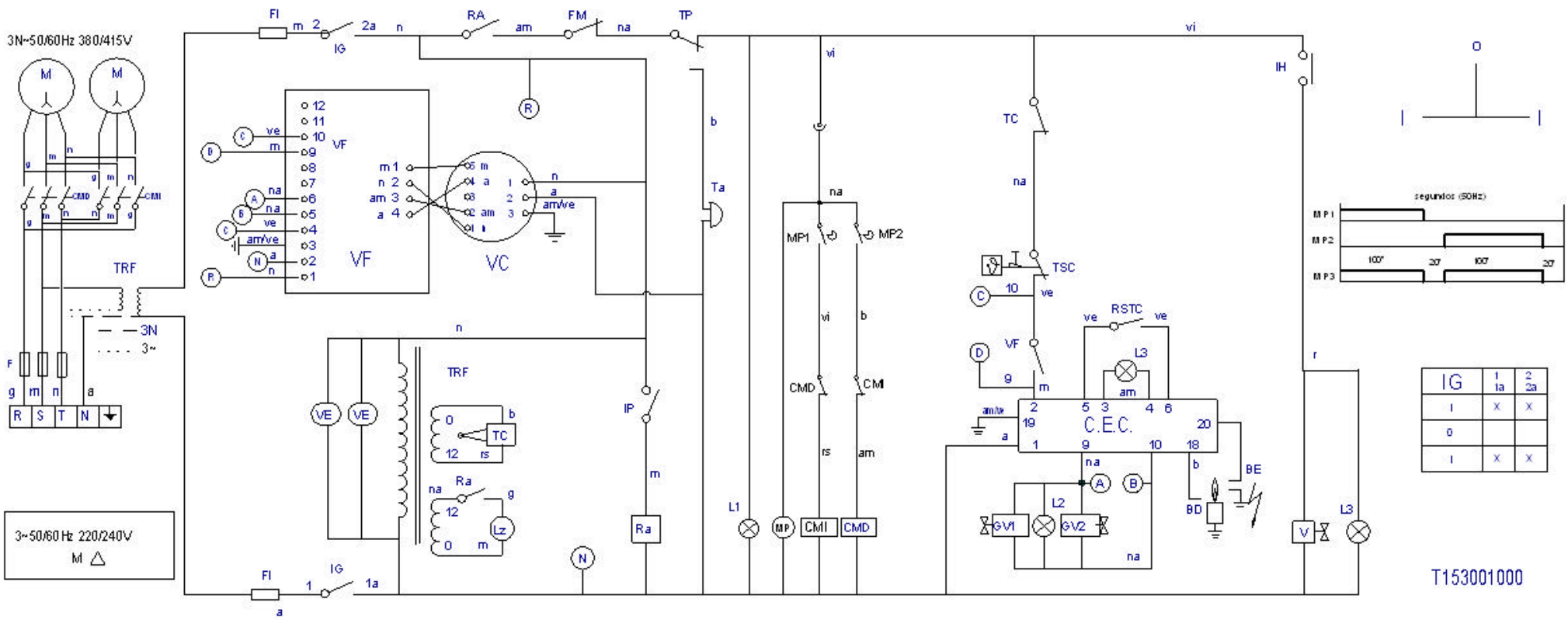


| IG | 1 1a | 2 2a |
|---|---|---|
| 1 | X | X |
| 0 | | |
| 1 | X | X |

| | | | | | |
|---|---|---|---|---|---|
| | ESQUEMA TEORICO ADHESIVO HCG | | T153001000 | | |
| Nº | Pieza | Material | Nº Clasificacion | Acabado | |
| Nº | Modificacion | Propuesta de | Fecha | Tolerancias generales | |
| | | | | <5± | 50-100± : |
| | | | | 5 -25± : | >100± |
| | | | | 25 -50± : | ◇± |

| | Firma | Fecha |
|---|---|---|
| Dibujado | M.Mallio | 19-10-2004 |
| Proyectado | M.Mallio | 19-10-2004 |
| Comprobado | | 22-10-2004 |
| Escala | | |

FAGOR

Fagor Industrial, Koop. Elk., Mugatua

Mecanizado superficial

HORNOS HCG

Plano numero HC-77666

Sustituye al Nº

Sustituido por

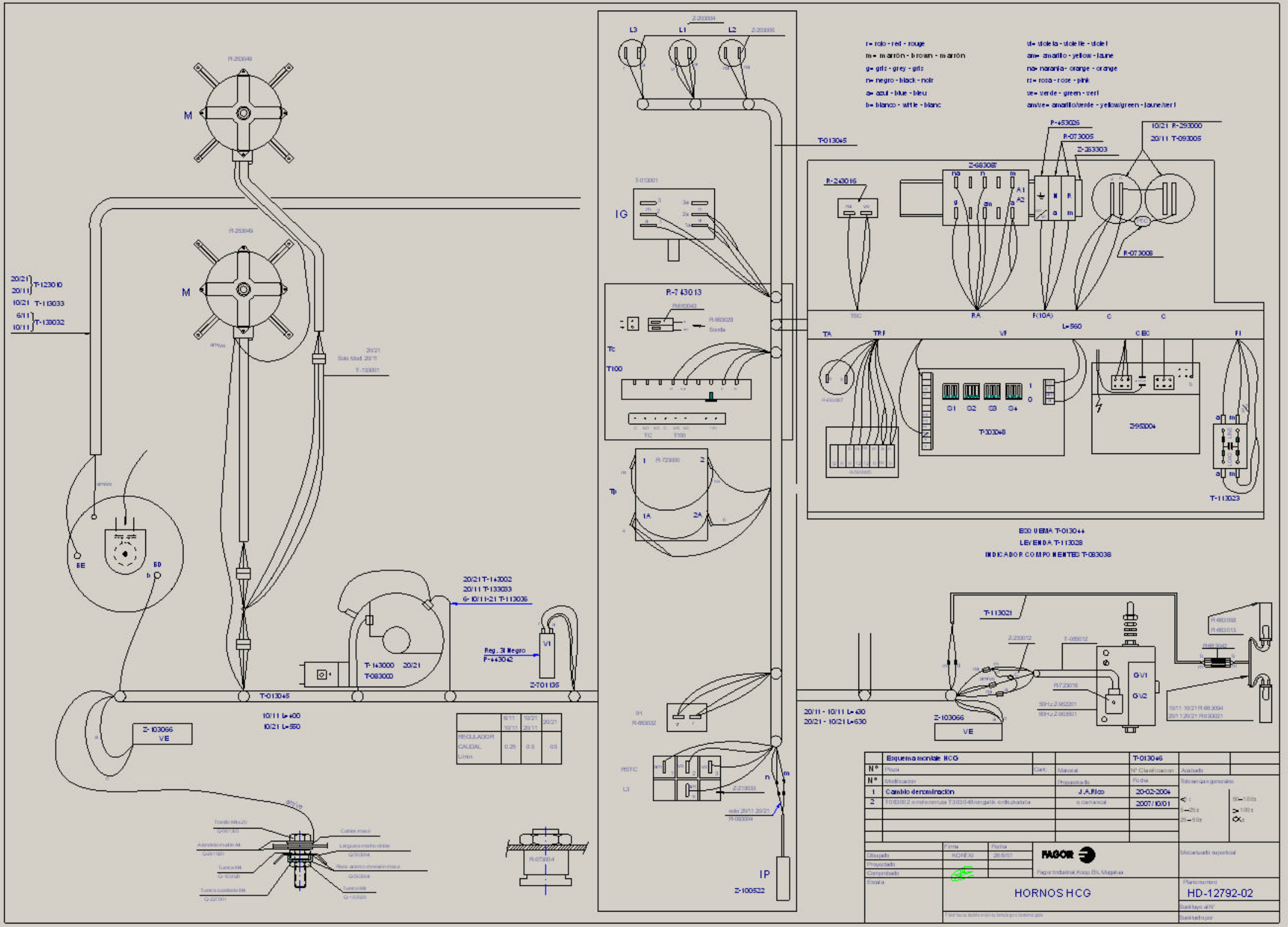
r= rojo - red - rouge
m= marrón - brown - marrón
g= gris - grey - gris
n= negro - black - noir
a= azul - blue - bleu
b= blanco - white - blanc
vi= violeta - violette - violet
am= amarillo - yellow - jaune
na= naranja - orange - orange
rs= rosa - rose - pink
ve= verde - green - vert
am/ve= amarillo/verde - yellow/green - jaune/vert
T-013045
IG
R-743013
T100
Tc
Tp
IH
RSTC
L3
IP
Z-100522
R-243016
R-073005
Z-263303
Z-683087
R-073008
T-303048
Z-953004
T-113023
ESQUEMA T-013044
LEYENDA T-113028
INDICADOR COMPONENTES T-083038
T-113021
Z-103066
VE
GV1
GV2
20/11 - 10/11 L=430
20/21 - 10/21 L=630
T-143000 20/21
T-083000
Reg. 3l Negro
P-443042
Z-701135
T-013045
10/11 L=400
10/21 L=550
REGULADOR CAUDAL L/min
0.25
0.5
0.8
Esquema montaje HCG
T-013046
Cambio denominación
J.A.Rico
20-02-2004
HORNOS HCG
HD-12792-02
FAGOR

## ESPAÑOL

CODIGO DE COLORES:

r = rojo
a = azul
m = marron
g = gris
n = negro
b = blanco
vi = violeta
am = amarillo
na = naranja
rs = rosa
ve = verde
am/ve = amarillo verde

COMPONENTES:

BD = Bujia de detector de llama
BE = Bujia de Encendido
C = Condensador Motor
C.E.C. = Control Encendido cámara
C.E.V. = Control encendido vapor
CN = Control nivel de agua
○ F, F1, F2, F3 = Fusible
FI = Filtro interferencias
FM = Térmico Motor
GV1 = Electroválvula de gas cámara (Control)
GV2 = Electroválvula de gas cámara (Seguridad)
GV4 = Electroválvula de gas vapor (Control)
GV5 = Electroválvula de gas vapor (Seguridad)
Ia = Micro chimenea abierta
Ic = Micro chimenea cerrada
IG = Interruptor general
IP = Interruptor puerta
IR = Selector regulador sonda núcleo
L1 = Lámpara de funcionamiento
L2 = Lámpara calentamiento cámara
L4 = Lámpara entrada de vapor
L3 = Lámpara indicador de bloqueo cámara
L5 = Lámpara indicador de bloqueo vapor
L6 = Lámpara seguridad de vapor
L7 = Lámpara detección de cal
Lz = Luz interior cámara
M = Motor
M1 = Motor accionamiento chimenea
R2, R1, Ra = Relé Auxiliar
RE1 = Regulador de energía
RSTC = Pulsador de rearme cámara
RSTV = Pulsador de rearme vapor
RTS = Regulador sonda núcleo
T100 = Termostato fijo 100°C
Ta = Timbre avisador
TC = Termostato cámara
TCN = Termostato condensación
TDC = Termostato detección de cal
○ TP, TMP = Temporizador
○ TRF, TRF1 = Transformador
TSC = Termostato seguridad cámara
TSV = Termostato seguridad de vapor
TV = Termostato de vapor
VI = Electroválvula de agua de llenado
VC = Ventilador centrífugo premezcla
VCN = Electroválvula de agua de condensación
VE = Ventilador cuadro eléctrico
VF = Variador de frecuencia

## FRANÇAIS

CODES DE COULEURS:

r = rouge
a = bleu
m = marron
g = gris
n = noir
b = blanc
vi = violet
am = jaune
na = orange
rs = rose
ve = vert
am/ve = jaune/vert

COMPOSANTS:

BD = Veilleuse de détection de flamme
BE = Veilleuse d'allumage
C = Condensateur moteur
C.E.C. = Controle d'allumage de chambre
C.E.V. = Controle d'allumage de vapeur
CN = Controle du niveau d'eau
○ F, F1, F2, F3 = Fusible
FI = Filtre interférences
FM = Moteur thermique
GV1 = Electrovalve de chambre gaz (controle)
GV2 = Electrovalve de chambre gaz (sécurité)
GV4 = Electrovalve de vapeur gaz (controle)
GV5 = Electrovalve de vapeur gaz (sécurité)
Ia = Micro cheminée ouverte
Ic = Micro cheminée fermée
IG = Interrupteur general
IP = Interrupteur de porte
IR = Sélecteur régulateur de sonde noyau
L1 = Lampe de fonctionnement
L2 = Lampe de chauffe chambre
L4 = Lampe d'arrivée de vapeur
L3 = Lampe témoin de blocage de chambre
L5 = Lampe témoin de blocage de vapeur
L6 = Lampe de sureté de vapeur
L7 = Lampe de détection de calcaire
Lz = Lumière intérieure de chambre
M = Moteur
M1 = Actionnement moteur de cheminée
R2, R1, Ra = Relais auxiliaire
RE1 = Régulateur d'énergie
RSTC = Bouton de réarmement de chambre
RSTV = Bouton de réarmement de vapeur
RTS = Régulateur de sonde noyau
T100 = Thermostat fixe 100°C
Ta = Sonnerie d'alarme
TC = Thermostat de chambre
TCN = Thermostat de condensation
TDC = Thermostat de détection de calcaire
○ TP, TMP = Temporisateur 0-120
○ TRF, TRF1 = Transformador
TSC = Thermostat de sureté de chambre
TSV = Thermostat de sureté de vapeur
TV = Thermostat de vapeur
VI = Electrovalve de remplissage d'eau
VC = Ventilateur de centrifugeuse de prémélange
VCN = Electrovalve de condensation d'eau
VE = Ventilateur tableau electrique
VF = Variador de frecuencia

## ENGLISH

COLOUR CODE

r = red
a = blue
m = brown
g = grey
n = black
b = white
vi = violet
am = yellow
na = orange
rs = pink
ve = green
am/ve = yellow-green

COMPONENTS:

BD = Flame detector spark plug
BE = Ignition spark plug
C = Motor condenser
C.E.C. = Cooking chamber ignition control
C.E.V. = Steam ignition control
CN = Water level control
○ F, F1, F2, F3 = Fusible
FI = Interference filter
FM = Motor thermal switch
Cooking chamber gas solenoid valve (control)
GV2 = Cooking chamber gas solenoid valve (safety)
GV4 = Steam gas solenoid valve (control)
GV5 = Steam gas solenoid valve (safety)
Ia = Chimney open microswitch
Ic = Chimney closed microswitch
IG = Interruptor general
IP = Door switch
IR = Core probe regulator selector
L1 = On/off lamp
L2 = Cooking chamber heating lamp
L4 = Steam inlet lamp
L3 = Cooking chamber lock indicator lamp
L5 = Steam lock indicator lamp
L6 = Steam safety lamp
L7 = Lime detection lamp
Lz = Cooking chamber interior lamp
M = Motor
M1 = Chimney drive motor
R2, R1, Ra = Ausiliary relay
RE1 = Energy regulator
RSTC = Cooking chamber reset button
RSTV = Steam reset button
RTS = Core probe regulator
T100 = Fixed 100°C thermostat
Ta = Warning buzzer
TC = Cooking chamber thermostat
TCN = Condensation thermostat
TDC = Lime detection thermostat
○ TP, TMP = 0-120 timer
○ TRF, TRF1 = Transformer
TSC = Cooking chamber safety thermostat
TSV = Steam safety thermostat
TV = Steam thermostat
VI = Water filling solenoid valve
VC = Pre-mix centrifuge fan
VCN = Condensation water solenoid valve
VE = Switchboard fan
VF = Frequency inverter

## DEUTSCH

FARBENCODE

r = rot
a = blau
m = braun
g = grau
n = schwarz
b = weiss
vi = violett
am = gelb
na = orangers
rs = rosa
ve = grün
am/ve = gelb/grün

KOMPONENTEN:

BD = Zündkerze des Flammendetektors
BE = Zündkerze der Zündung
C = Motorkondensator
C.E.C. = Zündkontrolle Kammer
C.E.V. = Zündkontrolle Dampf
CN = Kontrolle Wasserstand
○ F, F1, F2, F3 = Fusible
FI = Interferenzefilter
FM = Thermomoter
GV1 = Electroventil Gas, Kammer (Kontrolle)
GV2 = Electroventil Gas, kammer (Sicherheit)
GV4 = Electroventil Gas, Dampf (Kontrolle)
GV5 = Electroventil Gas, Dampf (Sicherheit)
Ia = Mikroschacht geoffnet
Ic = Mikroschacht geschlossen
IG = Hauptschalter
IP = Turschalter
IR = Wahlregler Kernsonde
L1 = Funktionsleuchtanzeige
L2 = Erwarmungsleuchtanzeige Kammer
L4 = Leuchtanzeige Dampfeintritt
L3 = Leuchtanzeige Blockierung Kammer
L5 = Leuchtanzeige Blockierung Dampf
L6 = Sicherheitsleuchtanzeige Dampf
L7 = Kalkanzeige
Lz = Innenbeleuchtung Kammer
M = Motor
M1 = Motorantrieb Mikroschacht
R2, R1, Ra = Relé Auxiliar
RE1 = Hilfsrelais
RSTC = Bedienungstaste Durch, Aufladung Kammer
RSTV = Bedienungstaste Durch, Aufladung Dampf
RTS = Kernsondenregler
T100 = Thermostat auf 100°C
Ta = Meldeklingel/Lautwerk
TC = Thermostat Kammer
TCN = Kondensationsthermostat
TDC = Thermostat Kalkanzeige
○ TP, TMP = Zeitschalter 0-120
○ TRF, TRF1 = Transformator
TSC = Sicherheitsthermostat Kammer
TSV = Sicherheitsthermostat Dampf
TV = Dampfthermostat
VI = Elektroventil Wasserfullung
VC = Zentrifugalluter Vormischung
VCN = Elektroventil Kondenswasser
VE = Schaltafelventilator
VF = Frequenzwandler

## ITALIANO

CODICE DEI COLORI:

r = rosso
a = azzurro
m = marrone
g = grigio
n = nero
b = bianco
vi = viola
am = giallo
na = arancione
rs = rosa
ve = verde
am/ve = giallo/verde

COMPONENTI:

BD = Candela del rilevatore di fiamma
BE = Candela d'accensione
C = Condensatore motore
C.E.C. = Controllo accensione cabina
C.E.V. = Controllo accensione vapore
CN = Controllo livello d'acqua
○ F, F1, F2, F3 = Fusibile
FI = Filtro interferenze
FM = Termico Motore
GV1 = Elettrovalvola gas cabina (controllo)
GV2 = Elettrovalvola gas cabina (sicurezza)
GV4 = Elettrovalvola gas vapore (controllo)
GV5 = Elettrovalvola gas vapore (Sicurezza)
Ia = Micro camino aperto
Ic = Micro camino chiuso
IG = Interruttore generale
IP = Interruttore porta
IR = Selettore regolatore sonda nucleo
L1 = Lampadina di funzionamento
L2 = Lampadina riscaldamento cabina
L4 = Lampadina ingreso vapore
L3 = Lampadina indicatore di blocco cabina
L5 = Lampadina indicatore di blocco vapore
L6 = Lampadina di sicurezza vapore
L7 = Lampadina rilevatore di calcare
Lz = Luce interna cabina
M = Motore
M1 = Motore funzionamento carrino
R2, R1, Ra = Relais ausiliario
RE1 = Regolatore d'energía
RSTC = Pulsante di riarmo vapore
RSTV = Regolatore sonda nucleo
RTS = Regulador Sonda Nucleo
T100 = Termostato fisso 100°C
Ta = Campanello avvisatore
TC = Termostato cabina
TCN = Termostato condensazione
TDC = Termostato rilevatore di calcare
○ TP, TMP = Timer 0-120
○ TRF, TRF1 = Transformador
TSC = Termostato sicurezza cabina
TSV = Termostato sicurezza vaspore
TV = Termostato vapore
VI = Elettrovalvola acqua di riempimento
VC = Ventilatore centrifuga
VCN = Elettrovalvola acqua di condensazione
VE = Ventilatore quadro elettrico
VF = Variatore di frequenza

T-113028

HC-75483 -01