DESPIECE TECNICO

# Secadoras
# Dryers
# Secheuses
# Trockners
# Essiccatoi

## SERIE DIGITALES "MP"

**Modelos:**

**SF-8 MP**
**SF-13 MP**

*Julio 2005 July*

FAGOR

Fagor Industrial

# DOOR / PUERTA / PORTA / PORTE / TÜR (PAG.2)

| Pos. | Código | SF-8 MP | SF-13 MP | Description | Descripción | Descrizione | Désignation | Bezeichnung |
|---|---|---|---|---|---|---|---|---|
| 1 | DO00V00044 | 1 | 1 | Door set | Conjunto puerta | Telaio oblò | Ensemble porte | Tür kompl. |
| 2 | DO010Y0030 | 1 | 1 | Door glass ring | Aro soporte cristal puerta | Anello supporto vetro oblò | Anneau support vitrage porte | Haltering türglas |
| 3 | DO1BE03437 | 1 | 1 | Door foam | Junta espuma puerta | Guarnizione spugna | Mousse porte | Türgichtung |
| 4 | DO1BG06036 | 1 | 1 | Door glass | Cristal puerta | Vetro oblò | Vitrage porte | Türglas |
| 5 | DO1FB02219 | 2 | 2 | Door locking magnet | Cierre magnético puerta | Oblò che blocca magnete | Fermeture magnétique porte | Tür die magneter verriegelt |
| 6 | DO1FB03040 | 2 | 2 | Hidden hinge | Bisagra oculta | Cerniera oblò | Charnière cachée | Scharnier versteckt |

## DOOR / PUERTA / PORTA / PORTE / TÜR

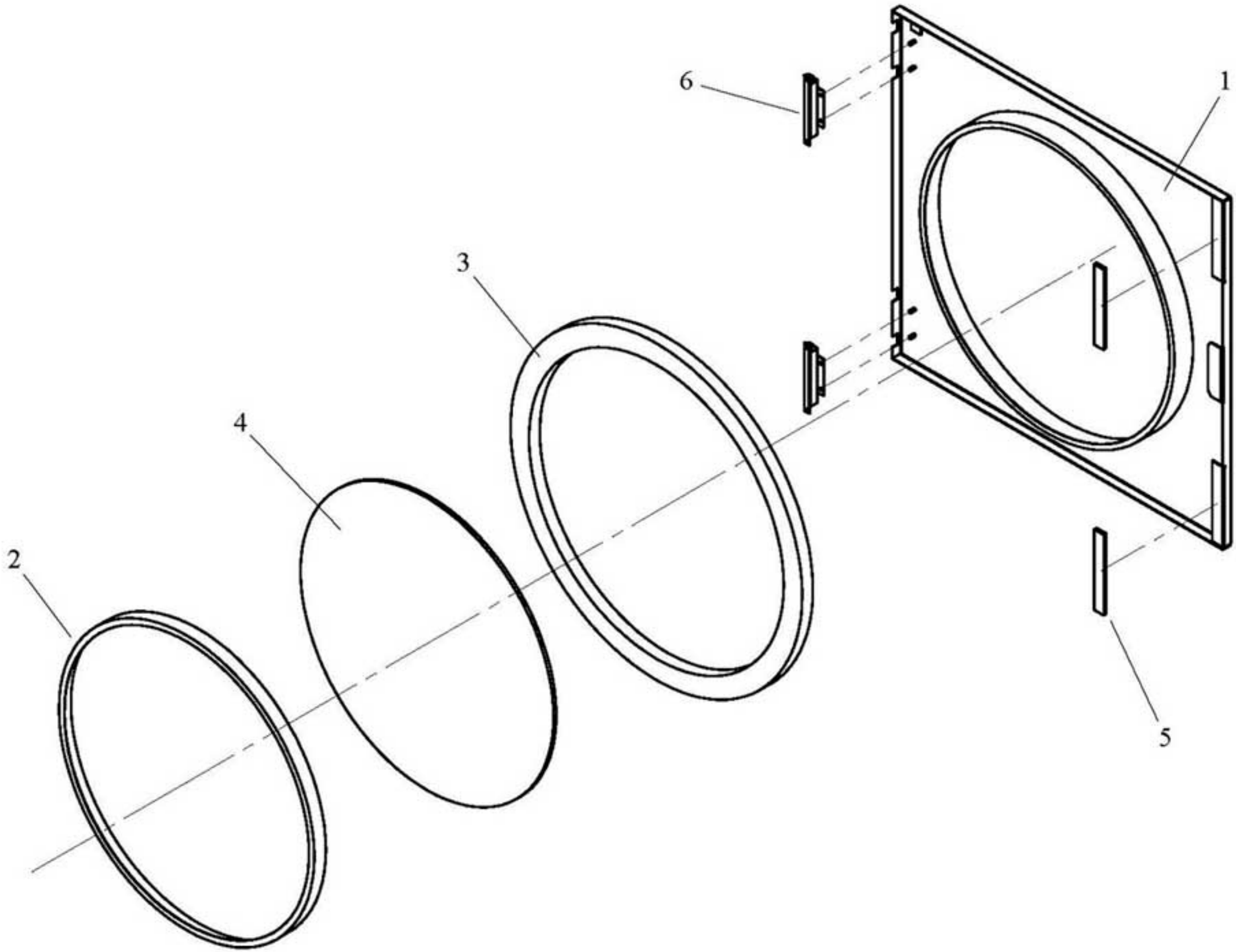

# EXHAUST / VENTILACION / ASPIRAZIONE / VENTILATION / LÜFTUNG (PAG.4)

| Pos. | Código | SF-8 MP | SF-13 MP | Description | Descripción | Descrizione | Désignation | Bezeichnung |
|---|---|---|---|---|---|---|---|---|
| 1 | DO1DE08312 | 1 | 1 | Centrifugal fan | Ventilador centrífugo | Motoventilatore | Ventilateur centrifuge | Zentrifugalventilator |
| 2 | DO1DE08387 | 1 | 1 | Fan protection | Rejilla ventilador | Piastra proterione ventilatore | Protecteur ventilateur | Ventilatorgitter |

# EXHAUST / VENTILACION / ASPIRAZIONE / VENTILATION / LÜFTUNG

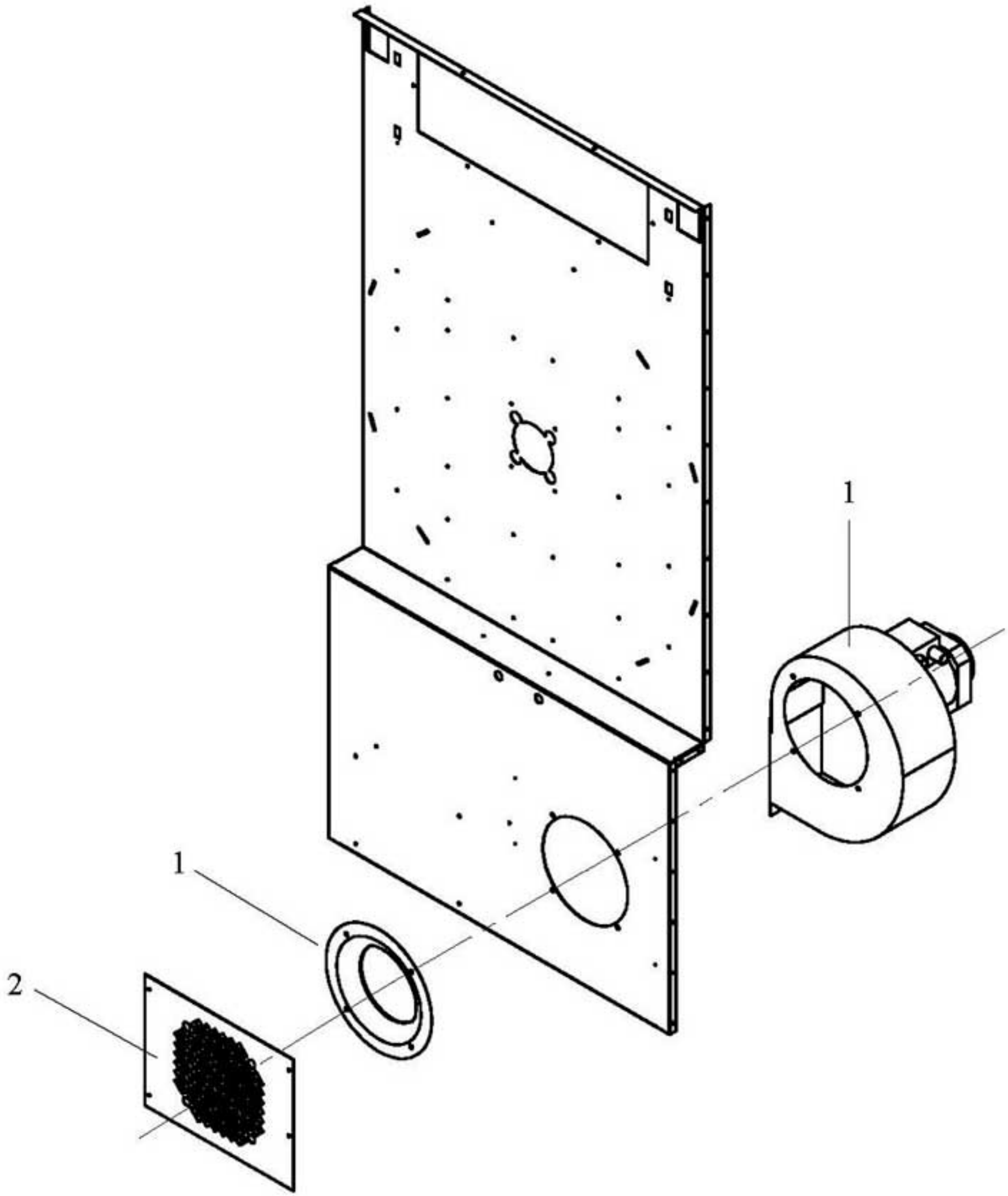

# DRUM / TAMBOR / CESTO / TAMBOUR / TROMMEL (PAG.6)

| Pos. | Código | SF-8 MP | SF-13 MP | Description | Descripción | Descrizione | Désignation | Bezeichnung |
|---|---|---|---|---|---|---|---|---|
| 1 | DO00V01001 | 1 | 1 | Axle-radium | Eje-radios tamdor | Albero di raggie | Axe-rayons | Achse-Speicher-Satz |
| 2 | DO00V01016 | 3 | 3 | Drum reinforcement | Refuerzo tambor | Placca rinforzo cesto | Renforcement tambour | Trommelverstärkung |
| 3 | DO00V01017 | 3 | | Drum suspender M12 | Tirantes tambor M12 | Tirante cesto M12 | Tenseur tambour M12 | Trommelspannvorrichtung M12 |
| | DO00V11017 | | 3 | Drum suspender M12 | Tirantes tambor M12 | Tirante cesto M12 | Tenseur tambour M12 | Trommelspannvorrichtung M12 |

# DRUM / TAMBOR / CESTO / TAMBOUR / TROMMEL

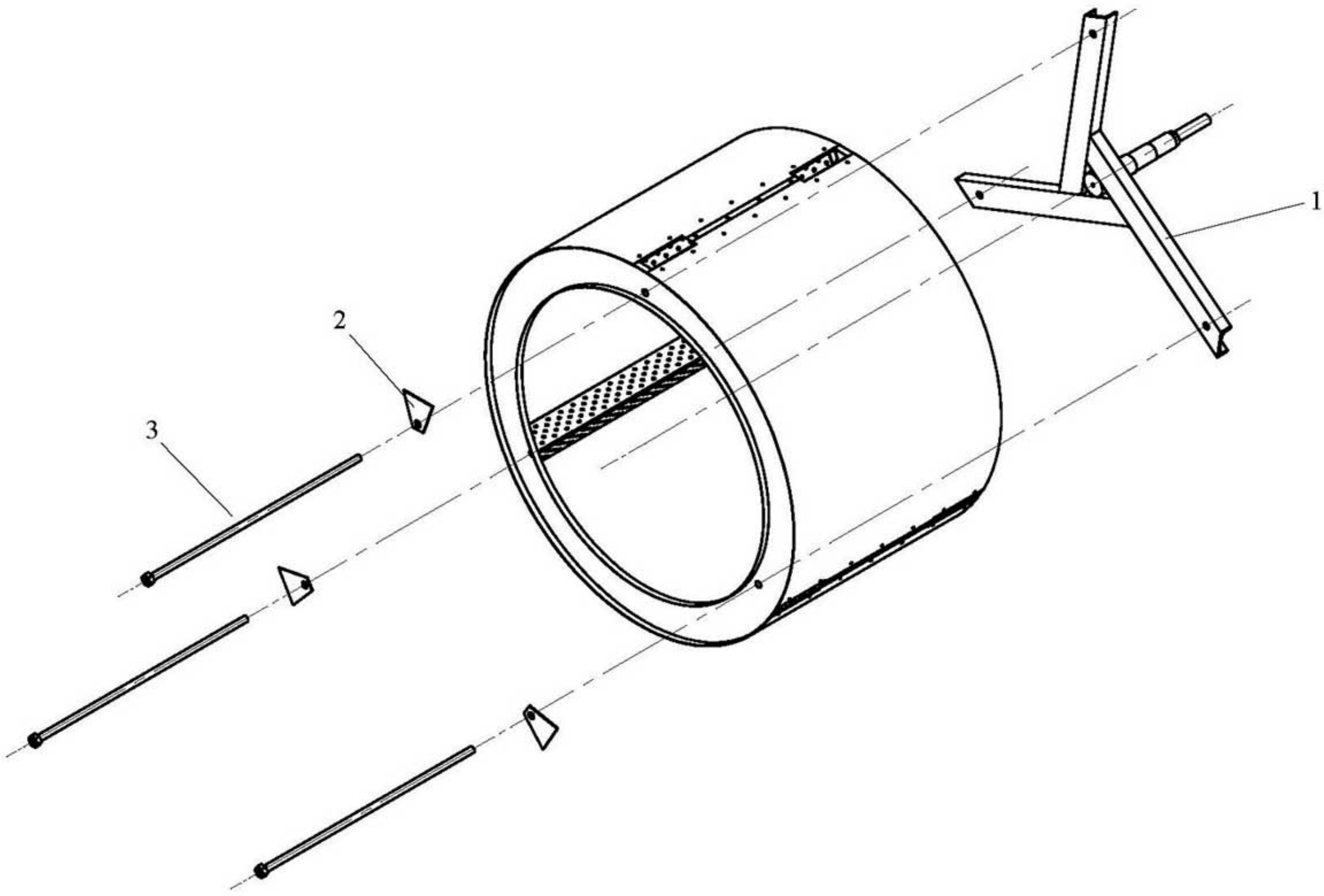

# DRIVE / TRANSMISION / TRANSMISSIONE / TRANSMISSION / ÜBERTRAGUNG (PAG.8)

| Pos. | Código | SF-8 MP | SF-13 MP | Description | Descripción | Descrizione | Désignation | Bezeichnung |
|---|---|---|---|---|---|---|---|---|
| 1 | DO00V00078 | 1 | 1 | Torque arm | Brazo de reacción reductor | Braccio blocca riduttore | Bras contre couple | Rückwirkungsarm |
| 2 | DO00V00079 | 1 | 1 | Bearing support | Soporte rodamiento | Piastra supporto sede cuscinetti | Support roulement | Lagersitz |
| 3 | DO01V01019 | 1 | | Drum set SF-8 MP<br>Axle-radium | Conjunto tambor SF-8 MP<br>Eje-radios tamdor | Cesto SF-8 MP<br>Albero di raggie | Ens. tambour SF-8 MP<br>Axe-rayons | Trommel kompl. SF-8 MP<br>Achse-Speicher-Satz |
| 3 | DO01V11019 | | 1 | Drum set SF-13<br>Axle-radium | Conjunto tambor SF-13<br>Eje-radios tamdor | Cesto SF-13<br>Albero di raggie | Ensemble tambour SF-13<br>Axe-rayons | Trommel kompl. SF-13<br>Achse-Speicher-Satz |
| 4 | DO1DC07045 | 1 | 1 | Gearbox motor | Motoreductor | Motore riduttore | Moteur reducteur | Motor reduktionsgetriebe |
| 5 | DO1ED40206 | 1 | 1 | Bearing UCFC 206 | Rodamiento UCFC 206 | Cuscinetto con sede UCFC 206 | Roulement UCFC 206 | Lager UCFC 206 |
| 6 | DO1ED40207 | 1 | 1 | Bearing UCFC 207 | Rodamiento UCFC 207 | Cuscinetto con sede UCFC 207 | Roulement UCFC 207 | Lager UCFC 207 |
| 7 | DO1GX10068 | 1 | 1 | Key 8x7x60 | Chaveta 8x7x60 | Linguetta albero cesto 8x7x60 | Clavette 8x7x60 | Keil 8x7x60 |

# DRIVE / TRANSMISION / TRANSMISSIONE / TRANSMISSION / ÜBERTRAGUNG

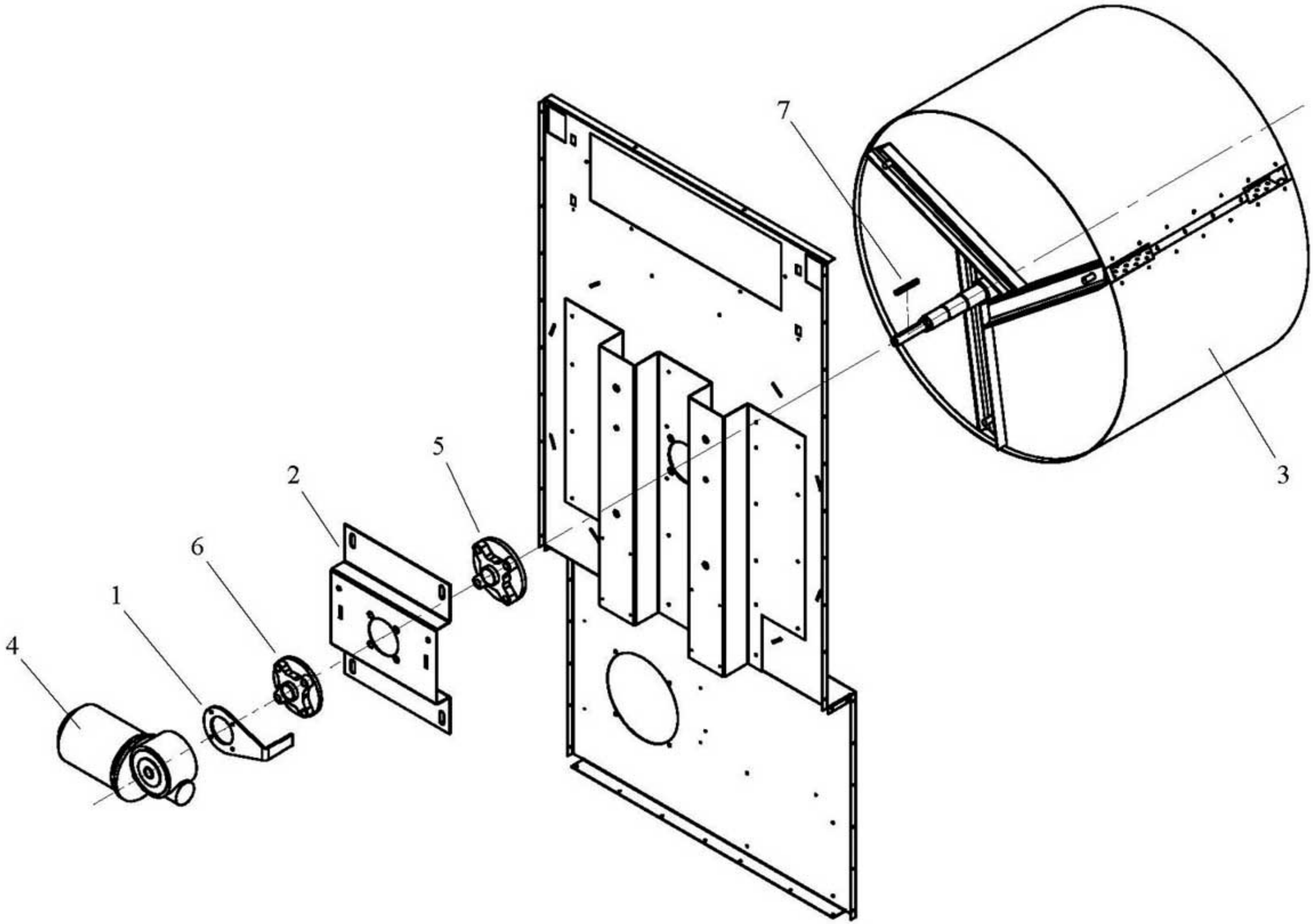

# DIGITAL BODY/MUEBLE DIGITAL/CARROZZERIA DIGITAL/ MEUBLE DIGITAL/DIGITALKASTEN

PAG.10

| Pos. | Código | SF-8 MP | SF-13 MP | Description | Descripción | Descrizione | Désignation | Bezeichnung |
|---|---|---|---|---|---|---|---|---|
| 1 | DO00V00023 | 1 | 1 | Back lids reinforcement | Refuerzo tapas posteriores | Schiena centrale | Renfort couvercles arnière | Verstärkung hintere deckel |
| 2 | DO00V00028 | 1 | 1 | Back superior lid | Tapa posterior superior | Schiena superiore | Couvercle arnière supérieur | Oberer hinterdeckel |
| 3 | DO00V00029 | 1 | 1 | Back inferior lid | Tapa posterior inferior | Schiena inferiore | Couvercle arnière inférieur | Unterer hinterdeckel |
| 4 | DO00V00069 | 1 | 1 | Front panel joint | Unión tapa intermedia | Pannello ass.vasca/frontale | assemble panneau frontale | Verbindung mitteldeckel |
| 5 | DO00V04003 | 1 | 1 | Battery thermic protection lid | Tapa protección térmica bateria | Pannello protezione termica | Couvercle protection thermique | Deckel thermoschutz der batterie |
| 6 | DO01V00053 | 1 | 1 | Inlet hoop | Aro refuerzo entrada | Anello circolare carico oblò | Cercle entrée | Eingangsverstärkungsring |
| 7 | DO07V00081 | 1 | 1 | Fluff filter lid | Tapa filtro borra | Pannello ispezione filtro | Couvercle filtre bourre | Flugfilterdeckel |
| 8 | DO07V00067 | 1 | 1 | Digital front panel | Tapa intermedia digital | Panello frontale | Panneau frontale digitale | Digital mitteldeckel |
| 9 | DO07V00068 | 1 | | Ceiling SF-8 MP | Techo SF-8 MP | Coperchio SF-8 MP | Plafond SF-8 MP | Plafond SF-8 MP |
| | DO07V10068 | | 1 | Ceiling SF-13 MP | Techo SF-13 MP | Coperchio SF-13 MP | Plafond SF-13 MP | Plafond SF-13 MP |
| 10 | DO1BC03036 | 4 | 4 | Levelling feet | Pies nivelación | Piedini regolabili | Pieds de nivellement | Nivellierfüsse |
| 11 | DO1DG11155 | 1 | 1 | Safety thermostat 180º | Termostato seguridad 180º | Termostato di sicurezza | Thermostat sécurité 180º | Sicherheitsthermostat 180º |
| 12 | DO1DH12310 | 1 | 1 | MP microprocessor | Microprocesador MP | Microprocessore MP | Microprocesseur MP | Mikroprozessor MP |
| 13 | DO1DH12350 | 1 | 1 | Micro. temperature sound | Sonda temperatura microp. | Sonda temperatura micro. | Sonde température microprocesseur | Temperaturfühler f.mikroprozessor |
| 14 | DO1DK13002 | 2 | 2 | Safety micro | Micro seguridad | Micro di sicurezza | Micro sécurité | Sicherheitsmikroschalter |
| 15 | DO1DK13104 | 1 | 1 | Emergency push-button | Pulsador paro emergencia | Pulsante emergenza completo | Bouton d'urgence | Notstoppdruckknopf |
| 16 | DO1DK13106 | 1 | 1 | Emergency stop adhesive | Anagrama paro emergencia | Targa "Emergency Stop" | Anagramme arrêt d'urgence | Notstoppanagramm |
| 17 | DO1DK13111 | 1 | 1 | Reset rectanular button (Gas) | Pulsador reset rectangular (Gas) | Pulsante reset (Gas) | Bouton reset rectangulaire (Gaz) | Rechteckiger reset-druckknopf (Gas) |
| 18 | DO1DL15029 | 1 | 1 | Caps top PG-29 (Electric) | Prensa estopa PG-29 (Electrico) | Passa cavo PG-29 (Electric) | Passe fil electrique PG-29 (Électrique) | Anschlussleitung PG-29 (Elektrische) |
| 19 | DO1DL15021 | 1 | 1 | Caps top PG-16 (Gas-Steam) | Prensa estopa PG-16 (Gas-Vapor) | Passa cavo PG-16 (Gas-Vapore) | Passe fil elect. PG-16 (Gaz-Vapore) | Anschlussleitung PG-16 (Gas-dampfh) |
| 20 | DO1FB03060 | 2 | 2 | Fluff filter lid handle | Tirador tapa filtro borra | Maniglia pannello filtro | Poignée couvercle filtre bourre | Griff des flugfilterdeckels |
| 21 | DO1FB03075 | 3 | 3 | Magnet band | Banda magnética | Profilo magnetico | Bande magnétique | Magnetband |
| 22 | DO1FB90220 | 1 | 1 | Polyprophilene clamp 6mm | Abrazadera polipropileno 6mm | Portasonda termostato in plastica | Collier polypropylène 6mm | Rohrschelle aus polypropylen 6mm |
| 23* | DO1KS00012 | 1 | 1 | Fluff filter bag | Saco filtro borra | Sacco filtro aria | Sac filtre bourre | Flugfiltersack |

11* A partir del numero maquina 53552, la referencia del termostato seguridad es DO1DG11154 // After the number machine 53552, the reference of the security thermostat is DO1DG11154.

23* A partir del numero maquina 53697, la referencia del filtro es DO1SK00016 // After the number machine 53697, the reference of the filter is DO1SK00016.

**DIGITAL BODY**
**MUEBLE DIGITAL**
**CARROZZERIA DIGITAL**
**MEUBLE DIGITAL**
**DIGITALKASTEN**

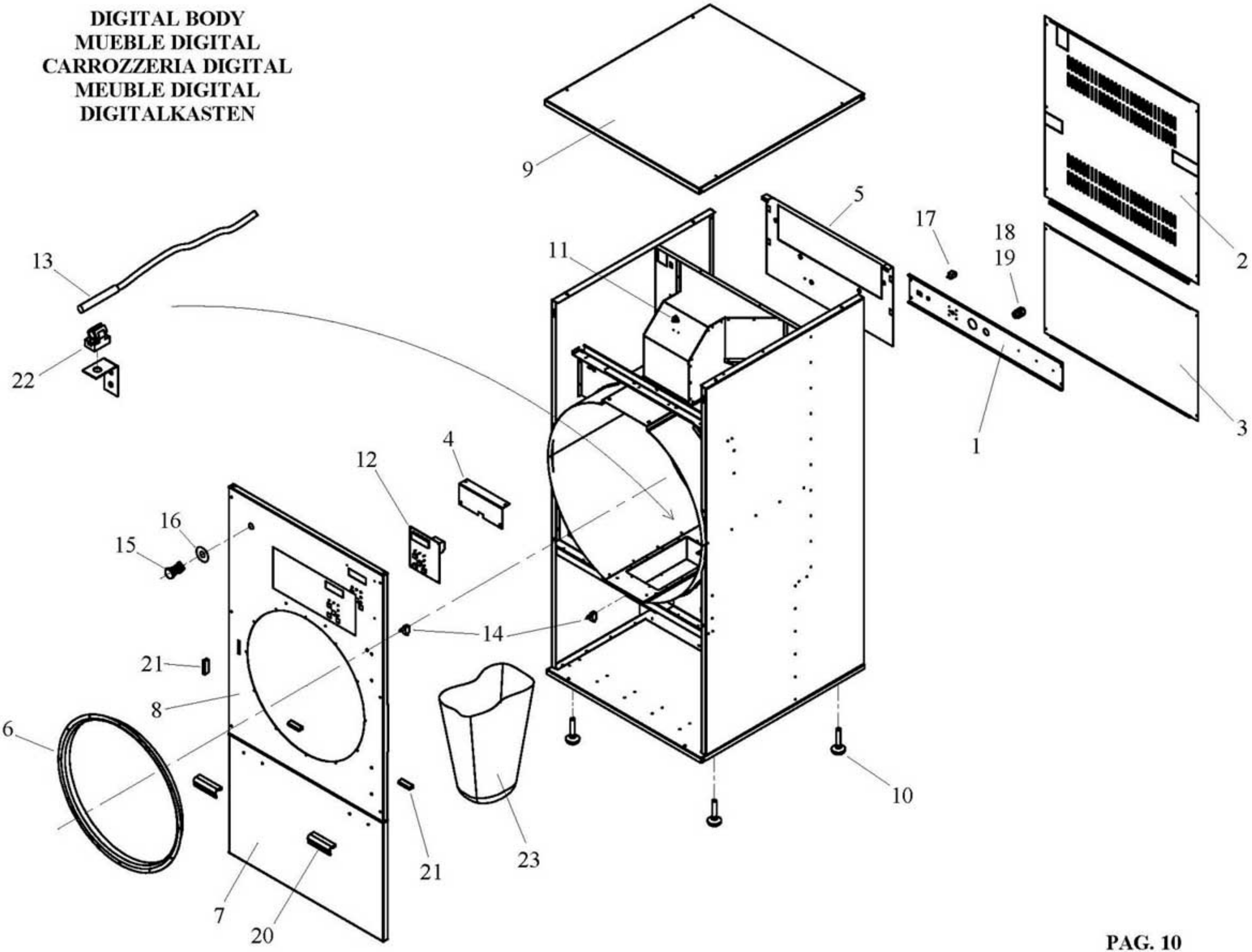

## DIGITAL ELECTRIC BOX / CUADRO ELECTRICO DIGITAL / QUADRO ELETTRICO / TABLEAU ELECTRIQUE DIGITAL / DIGITALSCHALTTAFEL (PAG.12)
## ELECTRICAL HEATING / CALEFACCION ELECTRICA / RISCALDAMENTO ELETTRICO / CHAUFFAGE ELECTRIQUE / ELEKTRISCHE HEIZUNG

| Pos. | Código | SF-8 MP | SF-13 MP | Description | Descripción | Descrizione | Désignation | Bezeichnung |
|---|---|---|---|---|---|---|---|---|
| 1 | DO00V00024 | 1 | 1 | Electric box | Cuadro eléctrico | Piastra porta cablaggio | Tableau électrique | Schalttafel |
| 2 | DO1BH07277 | 1 | 1 | Earth indicator | Indicador tierra | Targa di terra | Indicateur terre | Erdungszeiger |
| 3 | DO1DC00074 | 1 | 1 | Frequency control 0,25 kW | Variador frecuencia 0,25 kW | Variatore di frequenza 0,25kW | Variateur fréquence 0,25 kW | Frequenzumformer 0,25 kW |
| 4 | DO1DC01010 | 1 | 1 | Feeding filter | Filtro alimentación | Filtro di linea | Filtre alimentation | Zuführungsfilter |
| 5 | DO1DC01050 | 2 | 2 | Universal RC filter 220V | Filtro RC universal 220V | Filtro RC 220V | Filtre RC universel 220V | Universal RC Filter 220V |
| 6 | DO1DF10130 | 1 | 1 | Fan contactor | Contactor ventilador | Mini contattore | Contacteur ventilateur | Schaltschutz ventilator |
| 7 | DO1DF10135 | 1 | 1 | Resistors contactor | Contactor resistencias | Contattore resistenze | Contacteur résistances | Schaltschutz Widerständ |
| 8 | DO1DL14150 | 3 | 3 | Connection boxes 4/6 mm | Regleta conexión 4/6 mm | Connettore plastica 4/6 mm | Réglette connexion 4/6 mm | Anschlussleiste 4/6 mm |
| 9 | DO1DL14156 | 1 | 1 | Boxes lid 4/6 mm | Tapa regleta 4/6 mm | Fianco di chiusura 4/6 mm | Plateau réglette 4/6 mm | Deckel f. Anschlussleiste 4/6 mm |
| 10 | DO1DL14162 | 2 | 2 | End stop | Tope final | Terminale plastica | Arrêtoir final | Endstopp |
| 11 | DO1DL14203 | 2 | 2 | Fuse housing lane 35 | Portafusible carril 35 | Portafusibile 8,5x31,5 | Porte-fusible rail 35 | Sicherungshalter schiene 35 |
| 12 | DO1DL14280 | 2 | 2 | Fuse cartridge 2Amp | Cartucho fusible 2Amp | Fusibile ceramica 2Amp | Cartouche fusible 2Amp | Sicherungspatrone 2Amp |
| 13 | DO1DL14282 | 2 | 2 | Fuse cartridge 6Amp | Cartucho fusible 6Amp | Fusibile ceramica 6Amp | Cartouche fusible 6Amp | Sicherungspatrone 6Amp |
| 14 | DO1AB01439 | 1 | 1 | Diferential air pressure | Presostato diferencial | Pressostato diferenziale | Pressostat différentiel | Differentialdruckmesser |
| 15 | DO1DL14151 | 4 | 4 | Connection boxes 10 mm | Regleta conexión 10 mm | Connettore plastica 10 mm | Réglette connexion 10 mm | Anschlussleiste 10 mm |
| 16 | DO1DL14157 | 1 | 1 | Boxes lid 10 mm | Tapa regleta 10 mm | Fianco di chiusura 10 mm | Plateau réglette 10 mm | Deckel f. Anschlussleiste 10 mm |

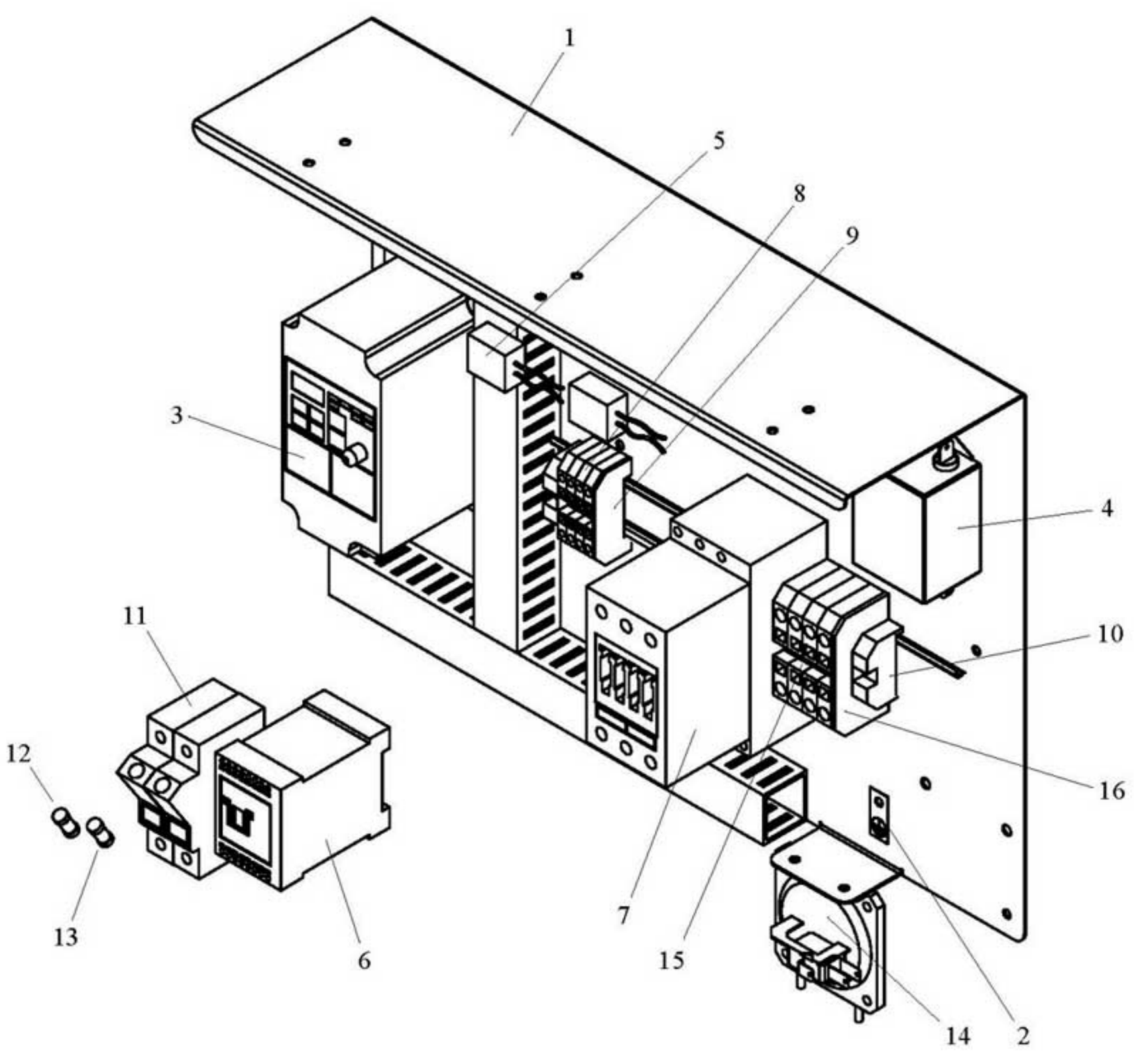
1
5
8
9
3
4
10
16
11
12
13
6
7
15
14
2

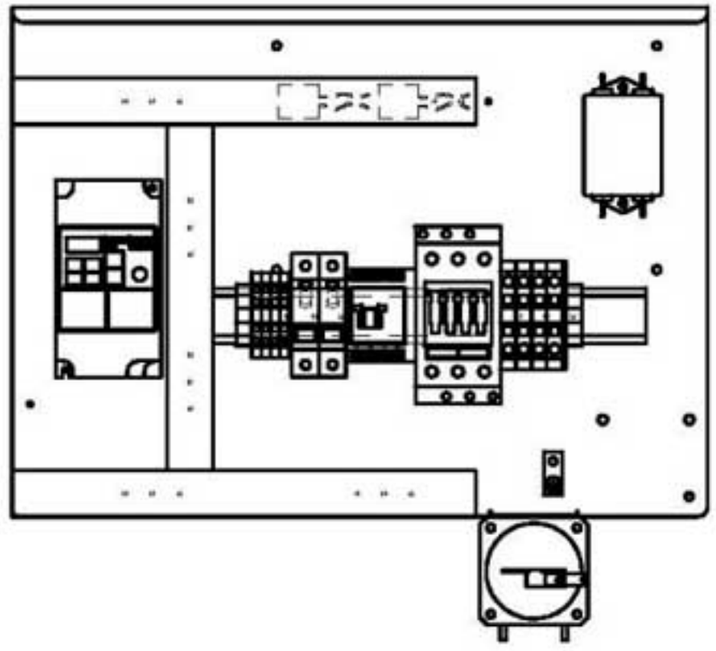

## DIGITAL ELECTRIC BOX / CUADRO ELECTRICO DIGITAL / QUADRO ELETTRICO / TABLEAU ELECTRIQUE DIGITAL / DIGITALSCHALTTAFEL (PAG.14)
## GAS-STEAM FEATING / CALEFACCION GAS-VAPOR / RISCALDAMENTO GAS-VAPORE / CHAUFFAGE GAZ-VAPEUR / GAS-DAMPFHEIZUNG

| Pos. | Código | SF-8 MP | SF-13 MP | Description | Descripción | Descrizione | Désignation | Bezeichnung |
|---|---|---|---|---|---|---|---|---|
| 1 | DO00V00024 | 1 | 1 | Electric box | Cuadro eléctrico | Piastra porta cablaggio | Tableau électrique | Schalttafel |
| 2 | DO1BH07277 | 1 | 1 | Earth indicator | Indicador tierra | Targa di terra | Indicateur terre | Erdungszeiger |
| 3 | DO1DC00074 | 1 | 1 | Frequency control 0,25 kW | Variador frecuencia 0,25 kW | Variatore di frequenza 0,25 kW | Variateur fréquence 0,25 kW | Frequenzumformer 0,25 kW |
| 4 | DO1DC01010 | 1 | 1 | Feeding filter | Filtro alimentación | Filtro di linea | Filtre alimentation | Zuführengsfilter |
| 5 | DO1DC01050 | 1 | 1 | Universal RC filter 220V | Filtro RC universal 220V | Filtro RC 220V | Filtre RC universel 220V | Universal RC filter 220V |
| 6 | DO1DF10130 | 1 | 1 | Fan contactor | Contactor ventilador | Mini contattore | Contacteur ventilateur | Schalterschutz ventilator |
| 7 | DO1DF10656 | 1 | 1 | Mini relay 220V AC | Minirelé 220V AC D. Conmutado | Mini relè 230V 2 cont.scambio | Minirelay 220V AC | Minirelais 220V AC |
| 8 | DO1DF10655 | 1 | 1 | Mini relay base | Base 8 patas minirelé 2C | Basetta mini relè | Support minirelay | Minirelaishalter |
| 9 | DO1DL14150 | 7 | 7 | Connection boxes 4/6 mm | Regleta conexión 4/6 mm | Connettore plastica 4/6 mm | Réglette connexion 4/6 mm | Anchlussleiste 4/6 mm |
| 10 | DO1DL14156 | 2 | 2 | Boxes lid 4/6 mm | Tapa regleta 4/6 mm | Fianco di chiusura 4/6 mm | Plateau réglette 4/6 mm | Deckel f.anchlussleiste 4/6 mm |
| 11 | DO1DL14162 | 2 | 2 | End stop | Tope final | Terminale plastica | Arrêtoir final | Endstopp |
| 12 | DO1DL14203 | 2 | 2 | Fuse housing lane 35 | Portafusible carril 35 | Portafisibile 8,5x31,5 | Porte-fusible rail 35 | Sicherungshalter schiene 35 |
| 13 | DO1DL14280 | 2 | 2 | Fuse cartridge 2Amp | Cartucho fusible 2Amp | Fusibile ceramica 2Amp | Cartouche fusible 2Amp | Sicherungspatrone 2Amp |
| 14 | DO1DL14282 | 2 | 2 | Fuse cartridge 6Amp | Cartucho fusible 6Amp | Fusibile ceramica 6Amp | Cartouche fusible 6Amp | Sicherungspatrone 6Amp |
| 15 | DO1AB01439 | 1 | 1 | Diferential air pressure | Presostato diferencial | Pressostato diferenziale | Pressostat différentiel | Differentialdruckmesser |

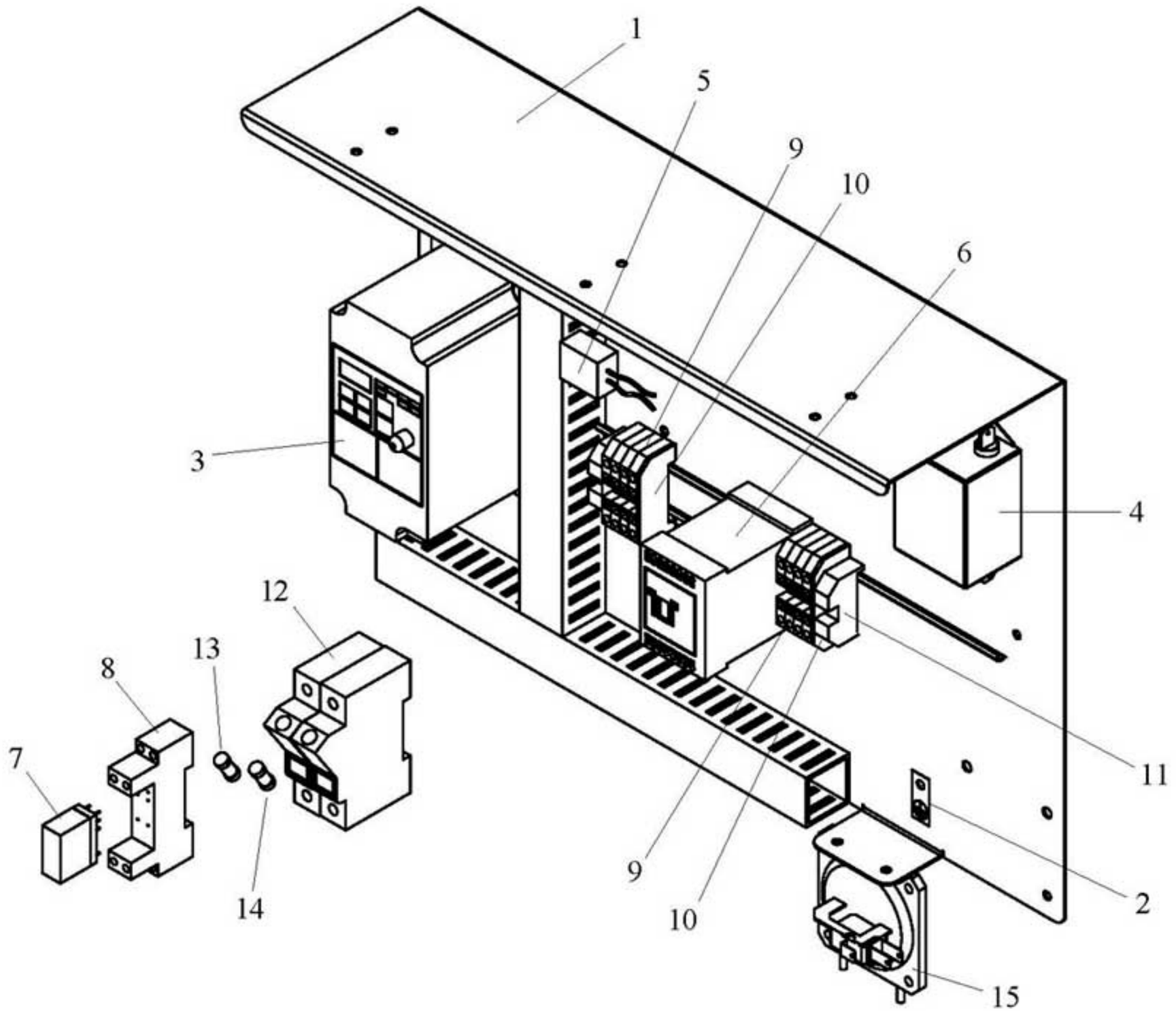
1
5
9
10
6
3
4
12
13
8
7
14
11
2
9
10
15

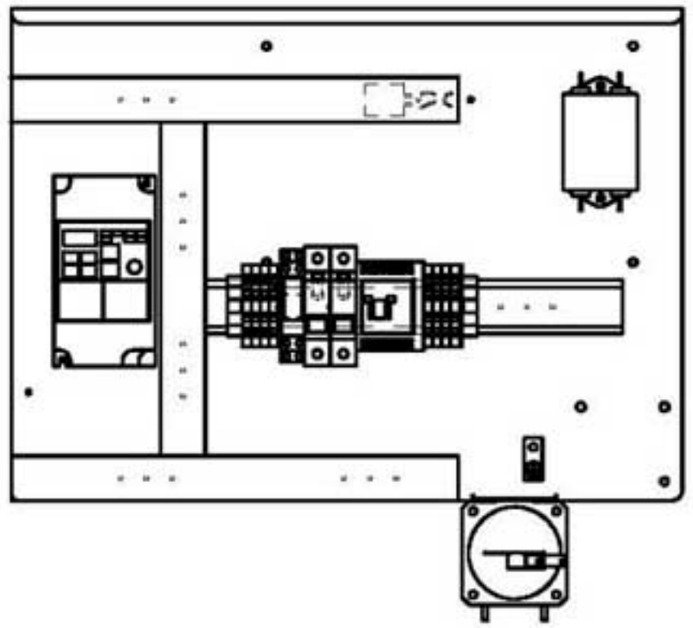

## ELECTRICAL HEATING / BATERIA ELECTRICA / BATTERIA ELETTRICA / CHAUFFAGE ELECTRIQUE / ELEKTRISCHE HEIZUNG (PAG.16)

| Pos. | Código | SF-8 MP | SF-13 MP | Description | Descripción | Descrizione | Désignation | Bezeichnung |
|---|---|---|---|---|---|---|---|---|
| 1 | DO00V03000 | 1 | 1 | Electric battery box | Caja bateria eléctrica | Schiena batteria elettrica | Boîte batterie électrique | Elektrische batterie gehäuse |
| 2 | DO00V03001 | 1 | 1 | Electric battery right hand side | Lateral derecho bateria eléctrica | Fianco sinistro batteria elettrica | Côté droit batterie électrique | Elektrische batterie rechte seite |
| 3 | DO00V03002 | 1 | 1 | Electric battery left hand side | Lateral izquierdo bateria eléctrica | Fianco destro batteria elettrica | Côté gauche batterie électrique | Elektrische batterie linke seite |
| 4 | DO00V03003 | 2 | 2 | Deviation | Desviador | Separatore resistenza | Deviateur | Gabelung |
| 5 | DO1AC02257 | 6 | 9 | Resistor 2000 W | Resistencia 2000 W | Resistenza alluminio 2000 W | Résistance 2000 W | Widerstand 2000 W |

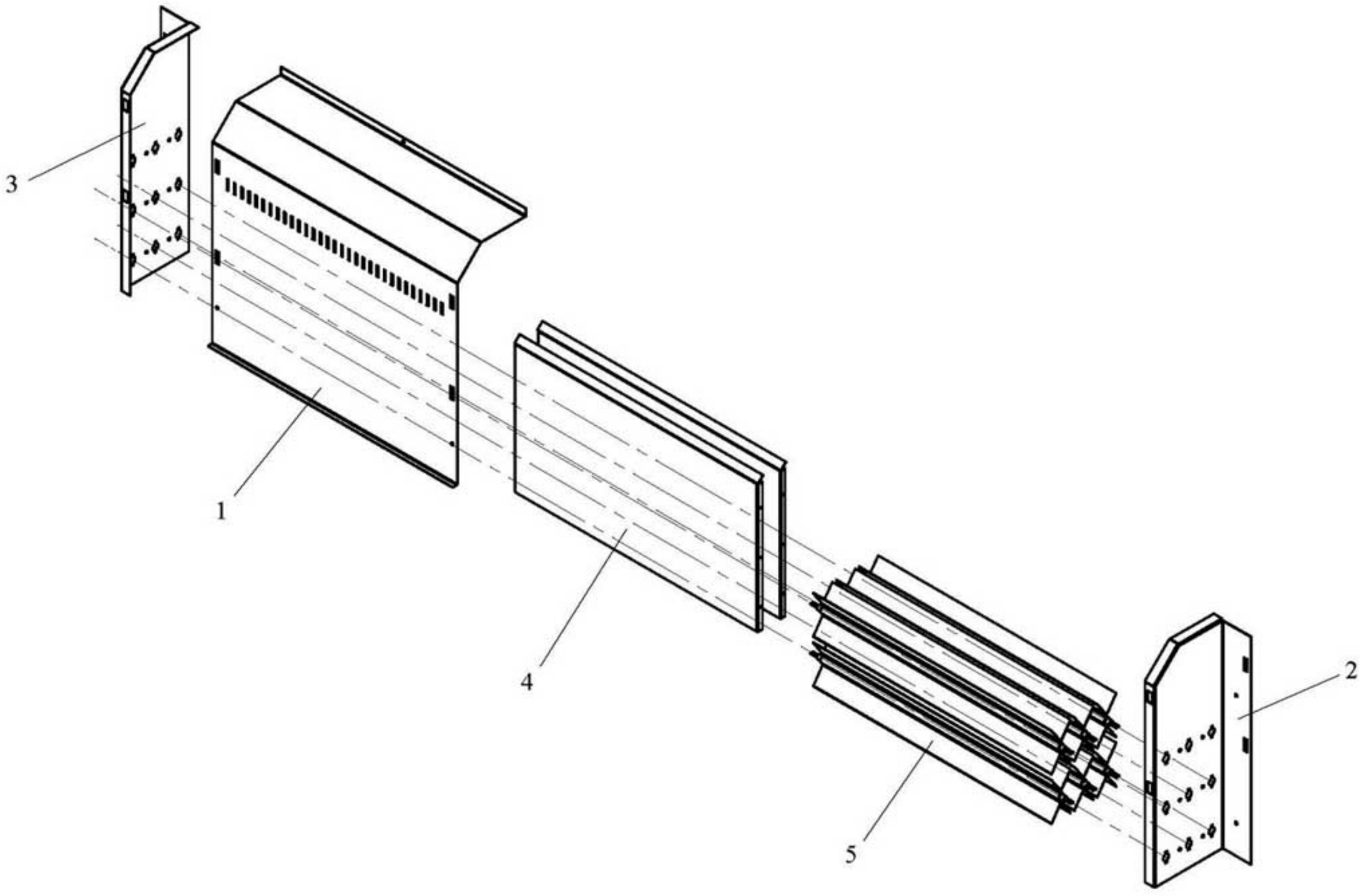
3
1
4
5
2

# GAS HEATING / BATERIA GAS / BATTERIA GAS / CHAUFFAGE GAZ / GASHEIZUNG (PAG.18)

| Pos. | Código | SF-8 MP | SF-13 MP | Description | Descripción | Descrizione | Désignation | Bezeichnung |
|---|---|---|---|---|---|---|---|---|
| 1 | DO00V04005 | 1 | 1 | Gas burner support | Soporte quemador gas | Supporto bruciatore | Support brûleur gaz | Gasbrennerhalterung |
| 2 | DO01V04004 | 1 | 1 | Gas box | Caja gas | Cassetto gas | Boîte gaz | Gasbox |
| 3 | DO01V04006 | 2 | 2 | Electrode support | Soporte electrodos | Supporto elettrodi gas | Support electrode | Elektrodenhalter |
| 4 | DO010Y0404 | 1 | 1 | Gas box window | Ventana caja gas | Sportello ispezione fiamma | Hublot boîte gaz | Fenster gasbox |
| 5 | DO1AB01415 | 1 | 1 | Gas electrovalve | Electroválvula gas | Elettrovalvola gas | Electrovanne gaz | Elektroventil f.gas |
| 6 | DO1AB01416 | 1 | 1 | Ionization circuit | Circuito ionización | Basetta elettronica | Circuit ionisation | Ionisationskreis |
| 7 | DO1AB01418 | 2 | 2 | Aluminium conection 90º 1/2" | Racor aluminio 90º 1/2" | Raccordo alluminio 90º 1/2" | Raccord aluminium 90º 1/2" | Alu-verschraubung 90º 1/2" |
| 8 | DO1AB01490 | 2 | 2 | Electrode | Electrodo | Elettrodo | Electrode | Elektrode |
| 9 | DO1AB01625 | 1 | 1 | Gas burner | Quemador gas | Bruciatore gas | Brûleur gaz | Gasbrenner |
| 10 | DO1AB01667 | 1 | 1 | Injector 2,3 mm (GLP) | Inyector 2,3 mm (Gas propano) | Ugello gas GLP 195 | Injecteur 2,3 mm (Gas propane) | Injektor 2,3 mm (Propangas) |
|  | DO1AB01669 | 1 | 1 | Injector 4,2 mm (Natural gas) | Inyector 4,2 mm (Gas natural) | Ugello gas metano 420 | Injecteur 4,2 mm (gaz naturel) | Injektor 4,2 mm (Erdgas) |
| 11 | DO1AB01671 | 1 | 1 | Support injector | Porta inyector | Supporto ugello | Support injecteur | Injektorhalter |
| 12 | DO1DK00002 | 2 | 2 | Electrode conector | Terminal electrodos | Connettore elettrodo | Connecteur electrode | Elektrodenanschluss |
| 13 | DO1DL17000 | 1 | 1 | Lighting ionization connector | Conector encendido-ionización gas | Connettore basetta | Connecteur allumage-ionisation gaz | Schalter zündung gas-ionisierung |
| 14 | DO1DO02030 | 0,7 | 0,7 | Electrode cable | Cable para bujía | Cavo alta tensione | Cable electrode | Kabel für elektrode |
| 15 | DO1TN10016 | 1 | 1 | Nut M16x1 | Tuerca M16x1 latón | Dado M16x1 | Écrou M16x1 | Messingmutter M16x1 |
| 16 | DO50782411 | 1 | 1 | Connection Fig.241 1/2" 3/8" | Reducción latón Fig.241 1/2" 3/8" | Raccordo Fig.241 1/2" 3/8" | Raccord Fig.241 1/2" 3/8" | Reduktionsv. Fl.241 1/2" 3/8" |

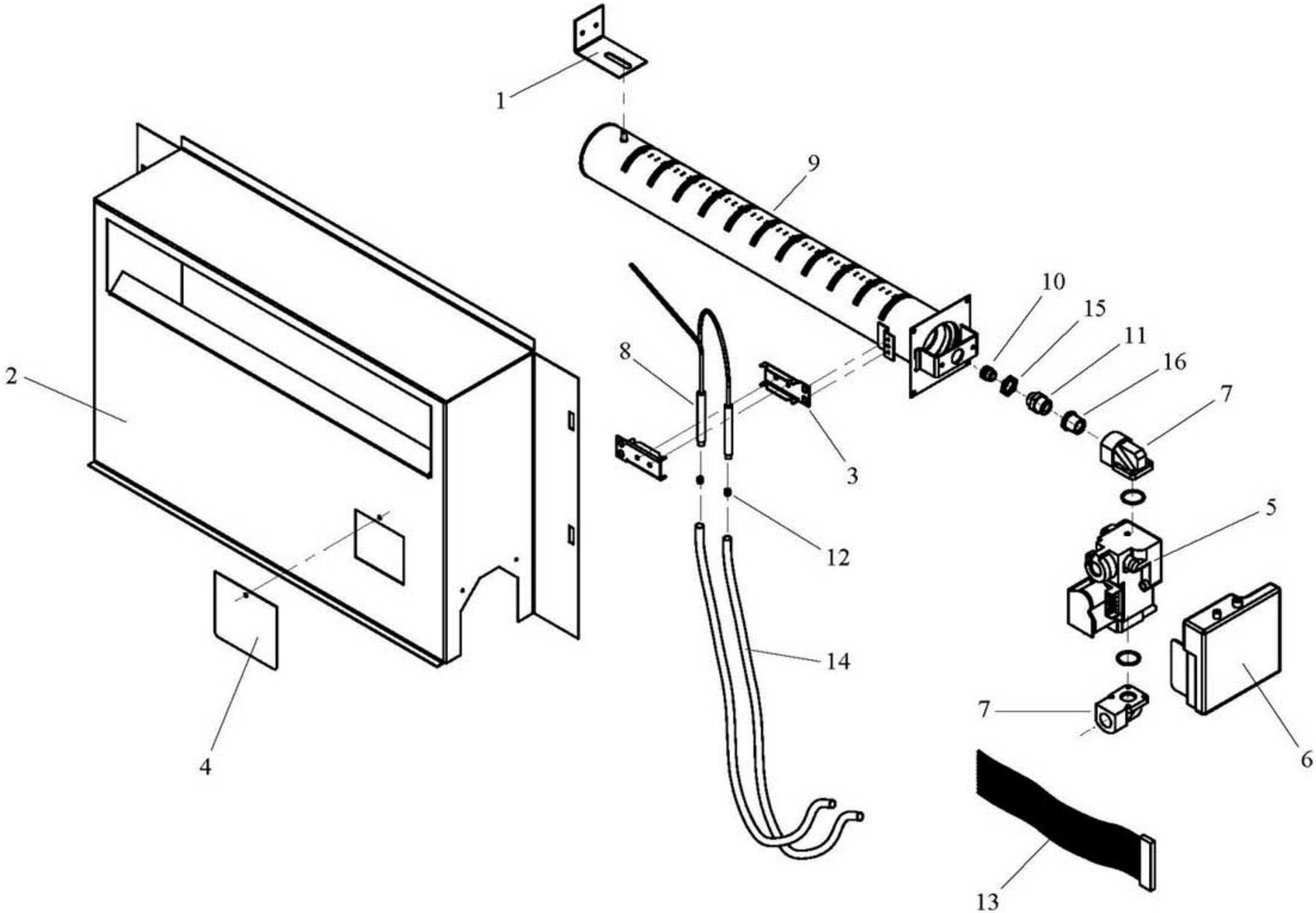
1
9
10
15
11
16
7
8
2
3
12
14
5
7
6
4
13

## STEAM HEATING / BATERIA VAPOR / BATTERIA VAPORE / CHAUFFAGE VAPEUR / DAMPFHEIZUNG (PAG.20)

| Pos. | Código | SF-8 MP | SF-13 MP | Description | Descripción | Descrizione | Désignation | Bezeichnung |
|---|---|---|---|---|---|---|---|---|
| 1 | DO000Y0506 | 1 | 1 | Steam battery cover | Tapa batería vapor | Coperchio batteria vapore | Couverture batterie vapeur | Dampfbatterie deckel |
| 2 | DO1JE80207 | 1 | 1 | Steam electrovalve 1/2" | Electroválvula 1/2" | Elettrovalvola vapore 1/2" | Electrovanne vapeur 1/2" | Elektroventil 1/2" |
| 3 | DO800Z0500 | 1 | 1 | Steam battery set | Conjunto batería vapor | Batteria vapore | Ensemble batterie vapeur | Dampfbatterie kompl. |

# STEAM HEATING / BATERIA VAPOR / BATTERIA VAPORE / CHAUFFAGE VAPEUR / DAMPFHEIZUNG

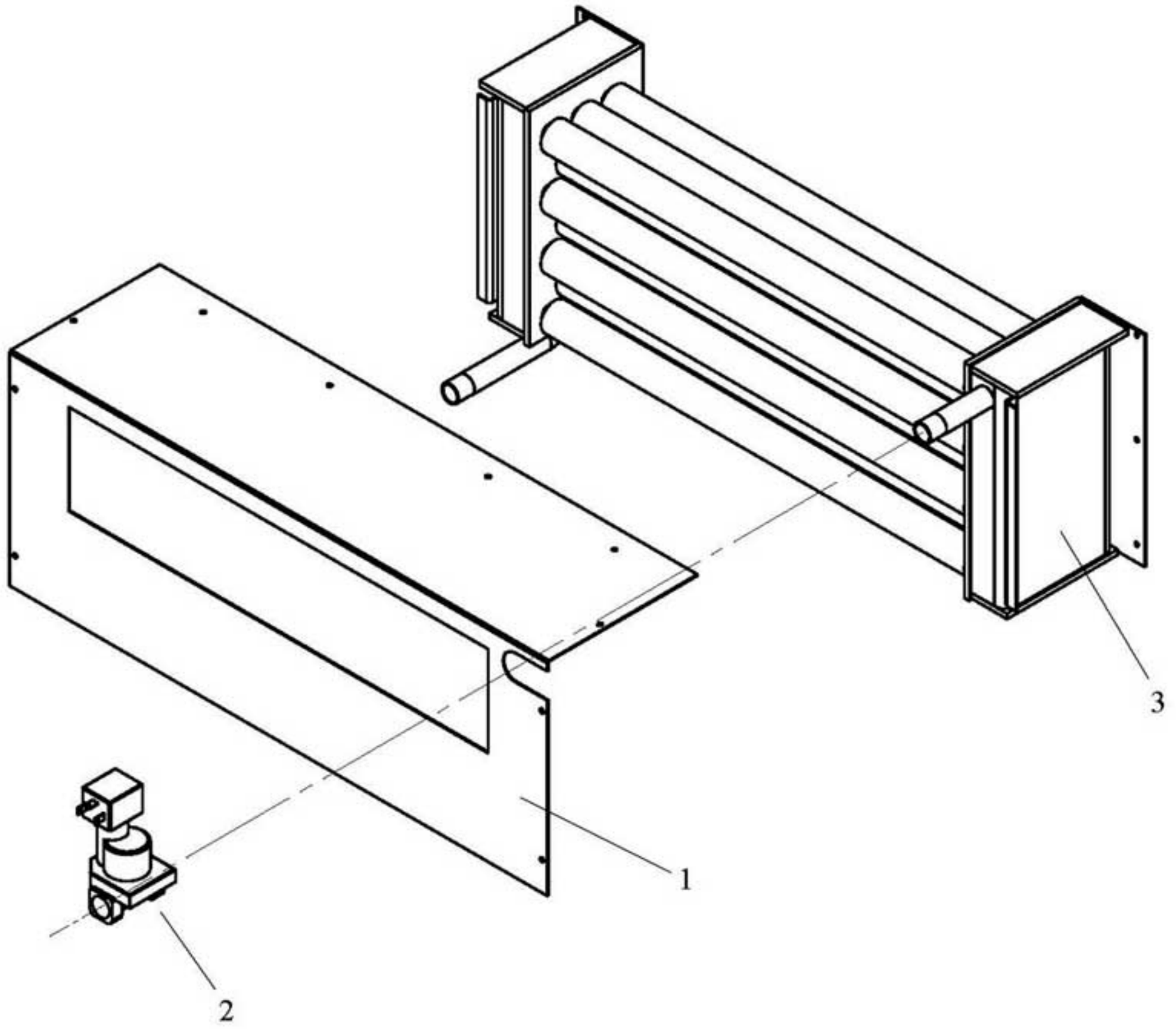

# ESQUEMA ELECTRICO SF-8-13 MP (MICROPRODESADOR E.D.U)

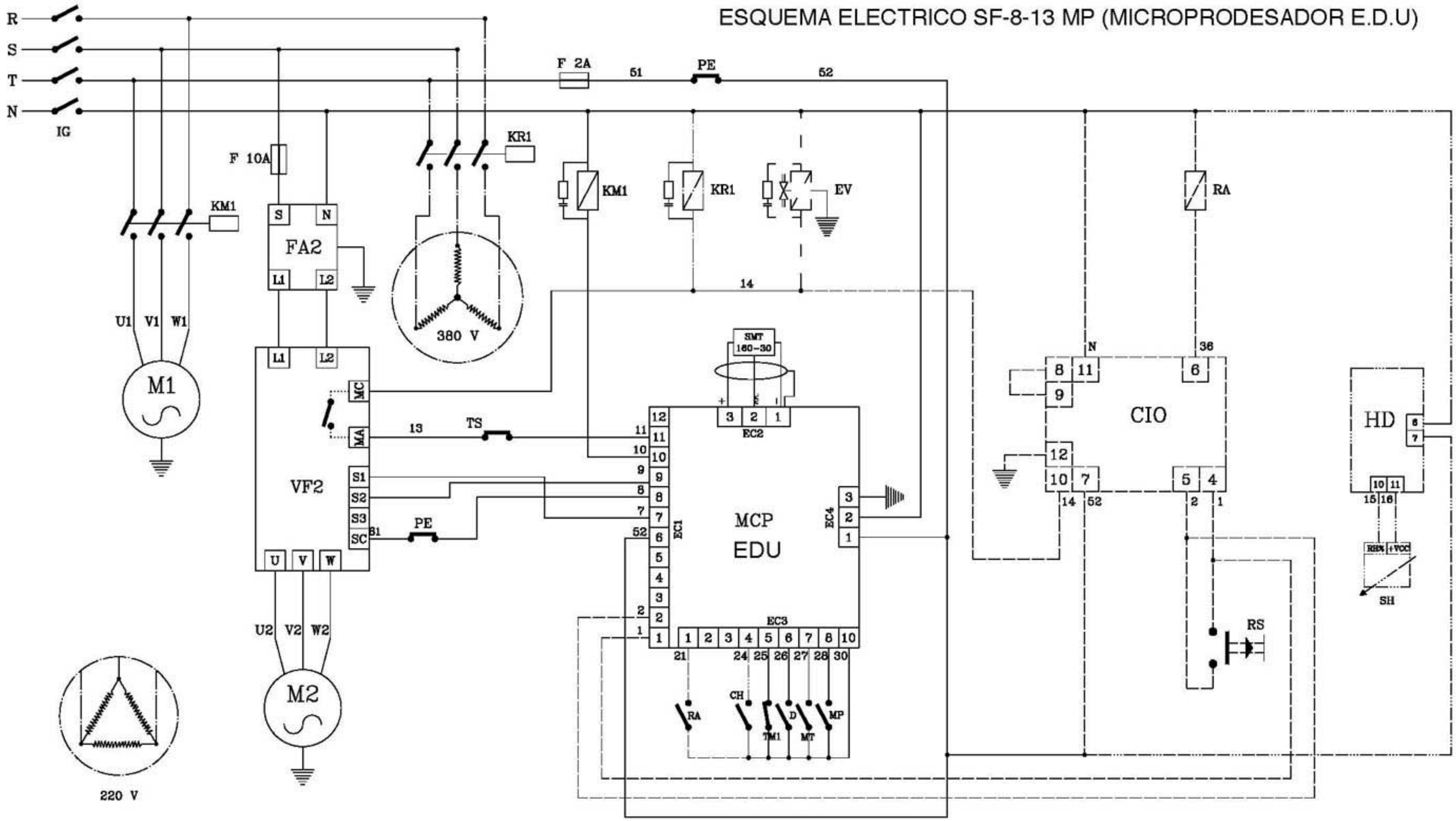


| | | | |
|---|---|---|---|
| M2 | Motor reductor/Moteur reducteur tambour/Motoreductor tambor | IG | Main switch/Commutateur principal/Interruptor general |
| M1 | Extractor motor/Moteur ventilateur/Motor ventilador | VF2 | Frequency inverter M2/Variateur fréquence/Variador freqüencia M2 |
| KR1 | Resistors contactor/Contacteur résistances/Contactor resistencias | TS | Safety thermostat/thermostat sécurité/Termostato seguridad |
| KM1 | M1 contactor/Contacteur M1/Contactor M1 | TM1 | Thermic M1/Thermique M1/Termico M1 |
| HD | Humidity control/Controle digital humidité/Humidostato digital | RA | Alarm relay/Relai alarme/Relé alarma |
| FA2 | VF2 filter/Filtre VF2/Filtro VF2 | SH | Humidity sensor/Sonde humidité/Sonda humedad |
| F | Fuse/Fusible/Fusible | RS | Reset/Reset/Reset |
| EV | Steam electrovalve/Electrovanne vapeur/Electroválvula vapor | PE | Emergency stop/Arrêt d'urgence/Paro emergencia |
| D | Depressor/Depressostat/Depresor | MT | Filter switch/Contact filtre/Micro tapa filtro |
| CIO | Ionization circuit/Circuit ionisation/Circuito ionización | MP | Door switch/Contact porte/Micro puerta |
| CH | Humidity contact/Contact humidité/contacto humidostato | MCP | Microprocessor/Microprocesseur/Microprocesador |

——— All the version/Toutes les versions/Todos los modelos

– – – – – Only gas heating/Uniquement chauffage gaz/Sólo calefacción a gas

—·—·— Only electric heating/Uniquement chauffage électrique/Sólo calefacción eléctrica

— – — Only steam heating/Uniquemente chauffage vapeur/Sólo calefacción a vapor

—··—··— Only with control humidity/Uniquement avec contrôle humidité/Sólo con humidostato

| Date/Date/Fecha | Version/Version/Versión | Code/Code/Código |
|---|---|---|
| 19-11-03 | 2 | S144 |