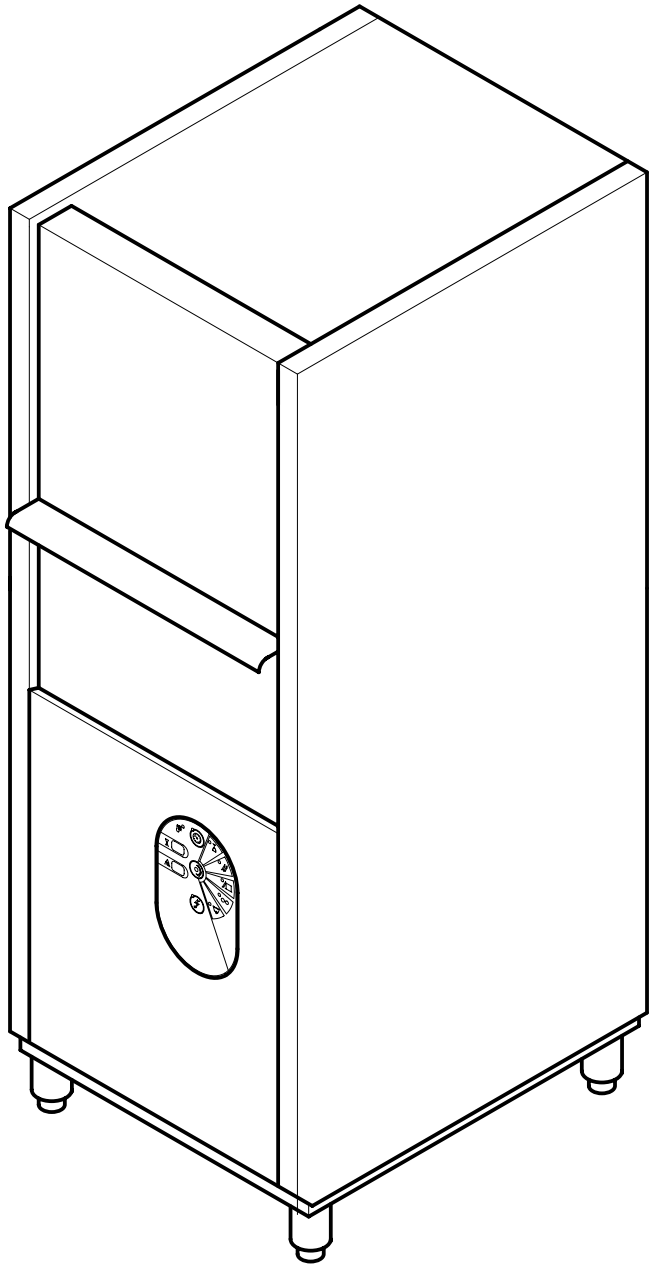

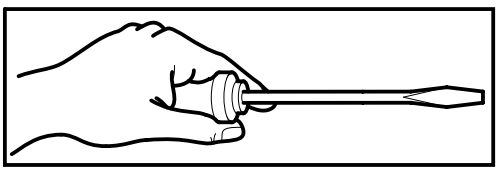

INDICE – INDEX

Hoja 1 – Cuerpo
Hoja 2 – Sistema eléctrico
Hoja. 3 – Componentes
Hoja. 4 – Grupo lavado
Hoja. 5 – Alimentación
Hoja. 6 – Brazos lavado – aclarado
Hoja. 6A – Brazos lavado –aclarado
Hoja. 7 – Bomba lavado
Hoja. 7A – Bomba lavado
Hoja. 8 – Bomba de aclarado

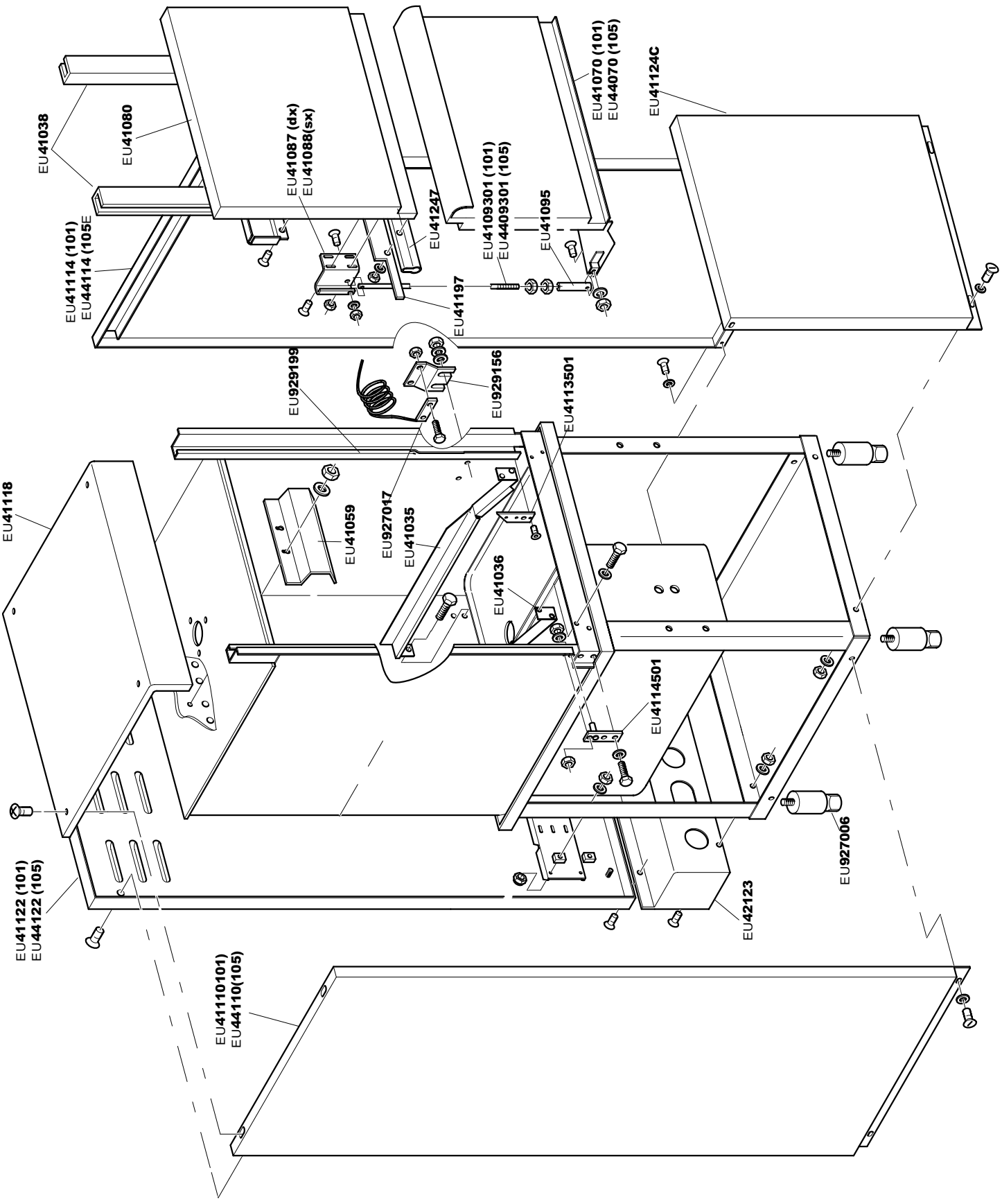
EU41038
EU41080
EU41087 (dx)
EU41088(sx)
EU41247
EU4109301 (101)
EU4409301 (105)
EU41095
EU41070 (101)
EU44070 (105)
EU41124C
EU41114 (101)
EU44114 (105E
EU41197
EU929199
EU929156
EU4113501
EU41118
EU41059
EU927017
EU41035
EU41036
EU4114501
EU927006
EU41122 (101)
EU44122 (105)
EU42123
EU41110101)
EU44110(105)

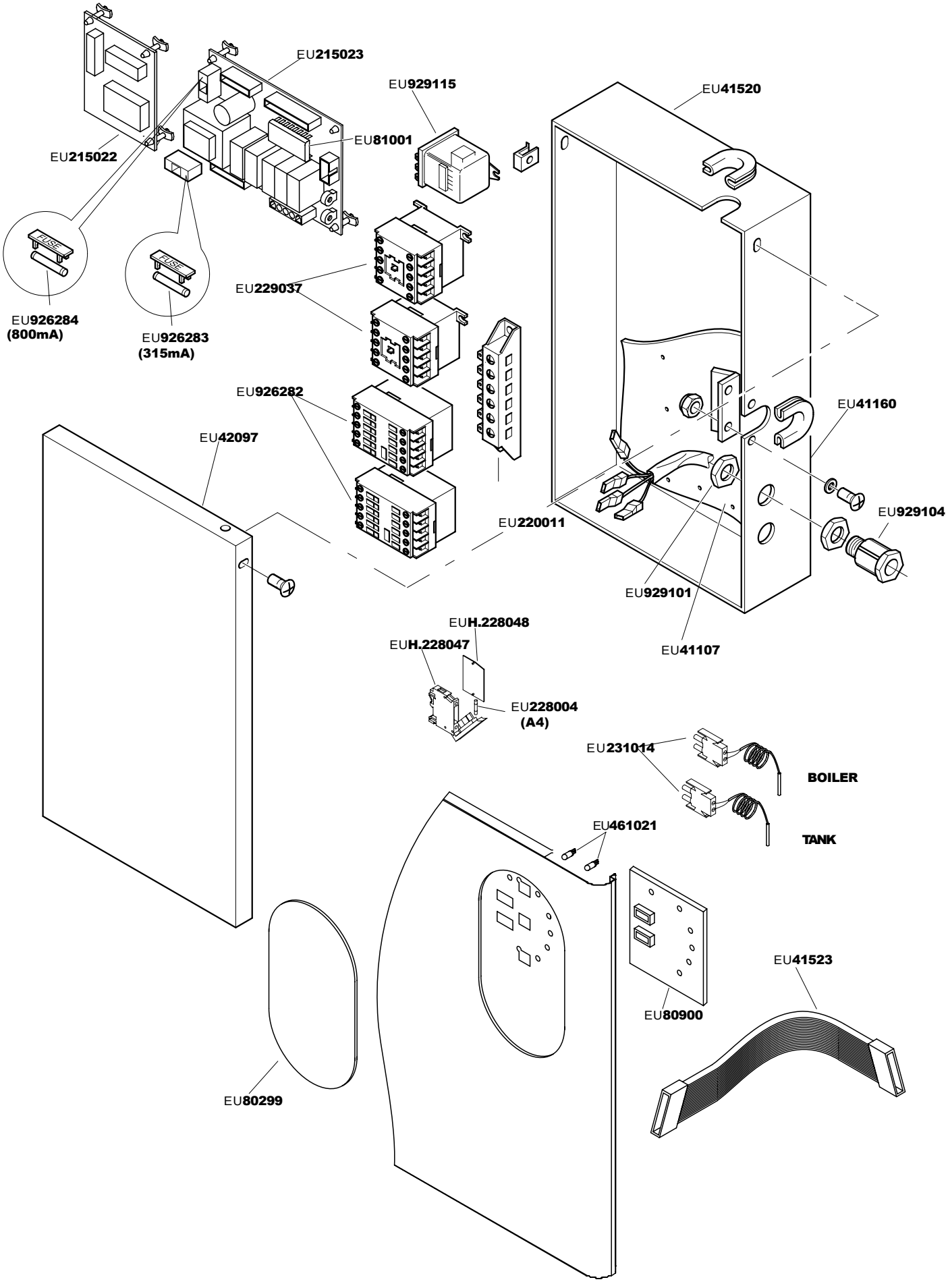
EU215023
EU929115
EU41520
EU81001
EU215022
EU229037
EU926284
(800mA)
EU926283
(315mA)
EU926282
EU41160
EU42097
EU929104
EU220011
EU929101
EUH.228048
EUH.228047
EU41107
EU228004
(A4)
EU231014
BOILER
TANK
EU461021
EU41523
EU80900
EU80299

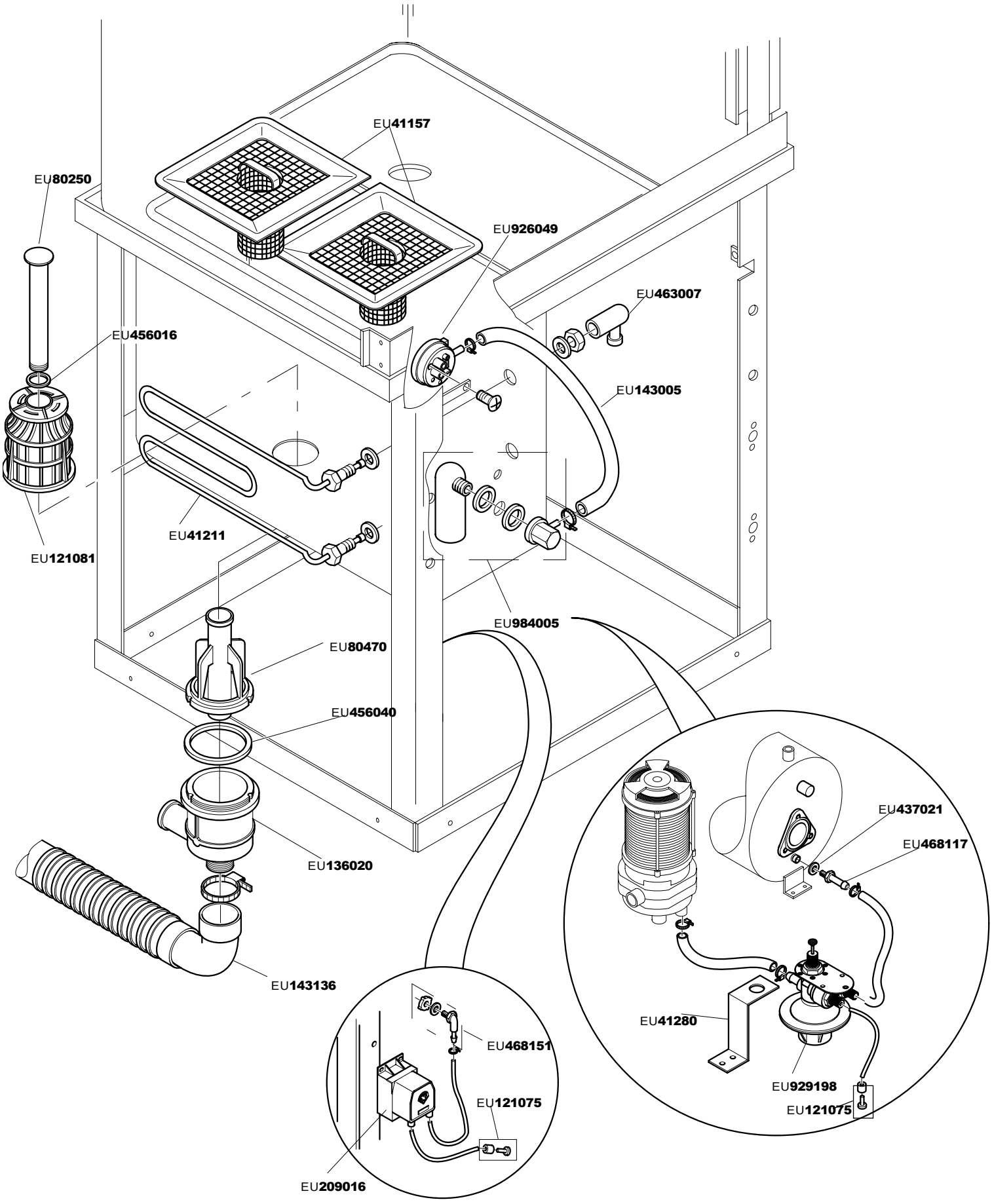
EU**41157**
EU**80250**
EU**926049**
EU**463007**
EU**456016**
EU**143005**
EU**41211**
EU**121081**
EU**984005**
EU**80470**
EU**456040**
EU**136020**
EU**143136**
EU**437021**
EU**468117**
EU**41280**
EU**929198**
EU**121075**
EU**468151**
EU**121075**
EU**209016**

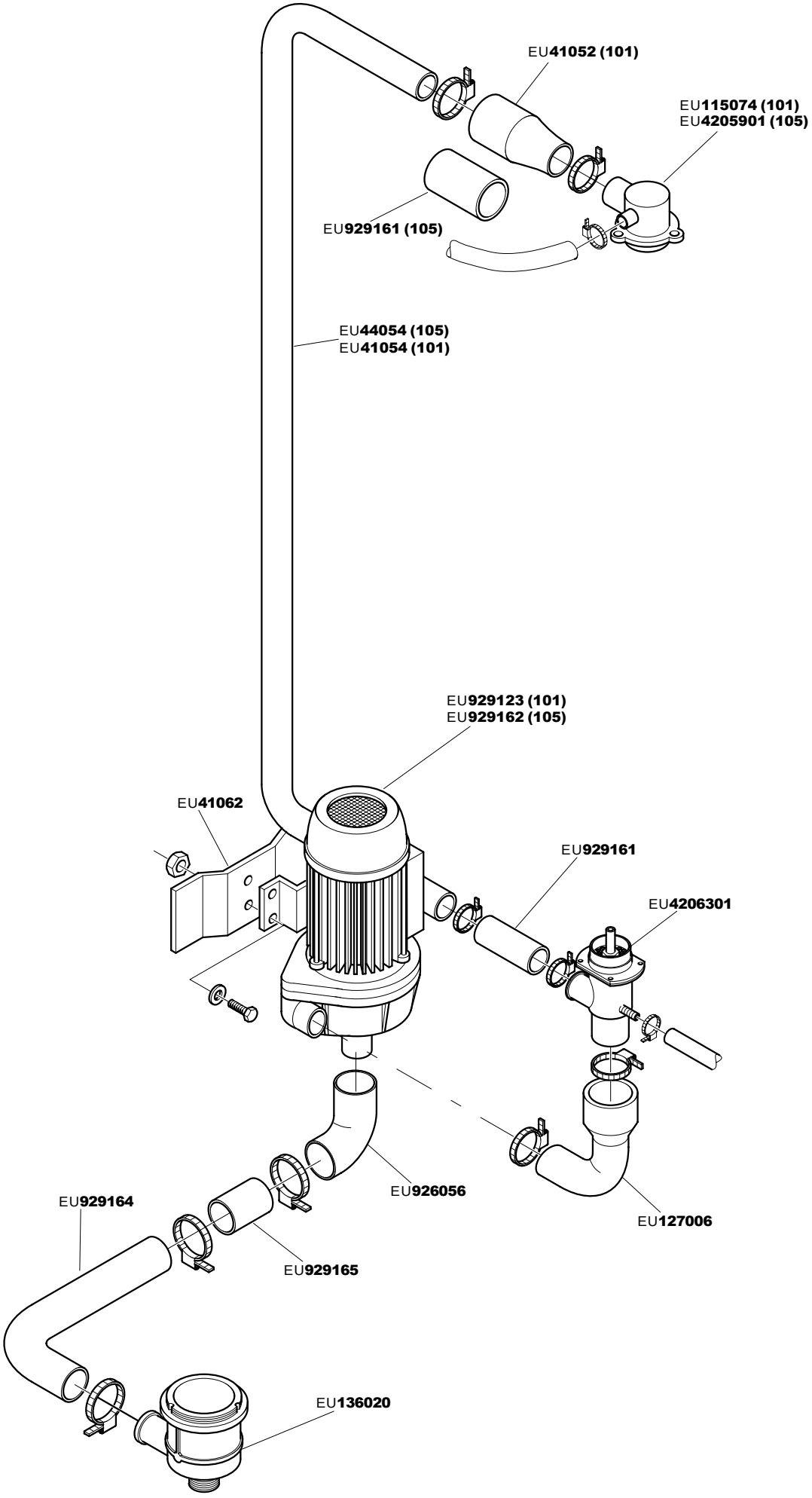
EU41052 (101)
EU115074 (101)
EU4205901 (105)
EU929161 (105)
EU44054 (105)
EU41054 (101)
EU929123 (101)
EU929162 (105)
EU41062
EU929161
EU4206301
EU926056
EU127006
EU929164
EU929165
EU136020

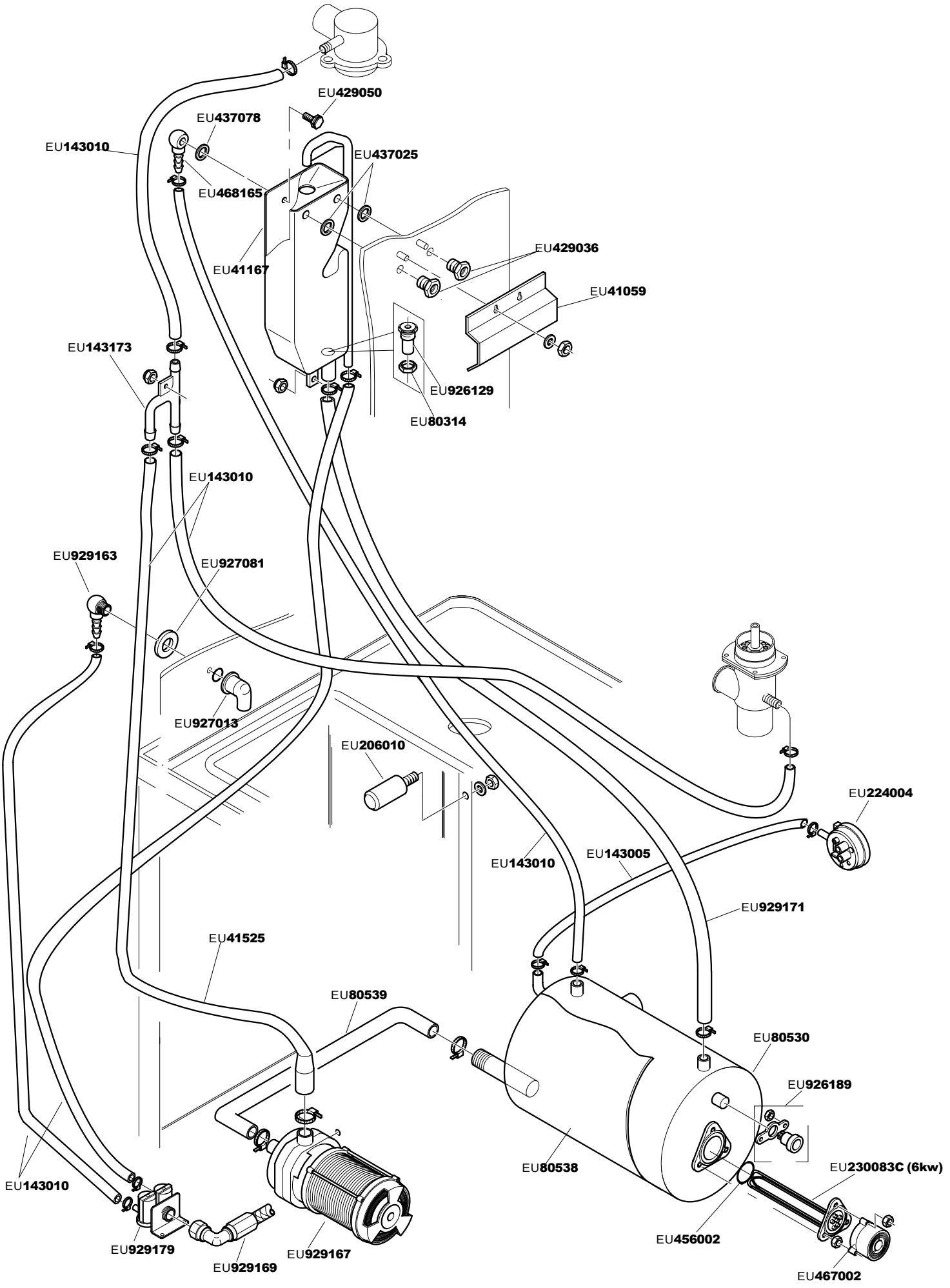
EU429050
EU437078
EU143010
EU437025
EU468165
EU429036
EU41167
EU41059
EU143173
EU926129
EU80314
EU143010
EU929163
EU927081
EU927013
EU206010
EU224004
EU143010
EU143005
EU929171
EU41525
EU80539
EU80530
EU926189
EU80538
EU230083C (6kw)
EU143010
EU929179
EU929169
EU929167
EU456002
EU467002

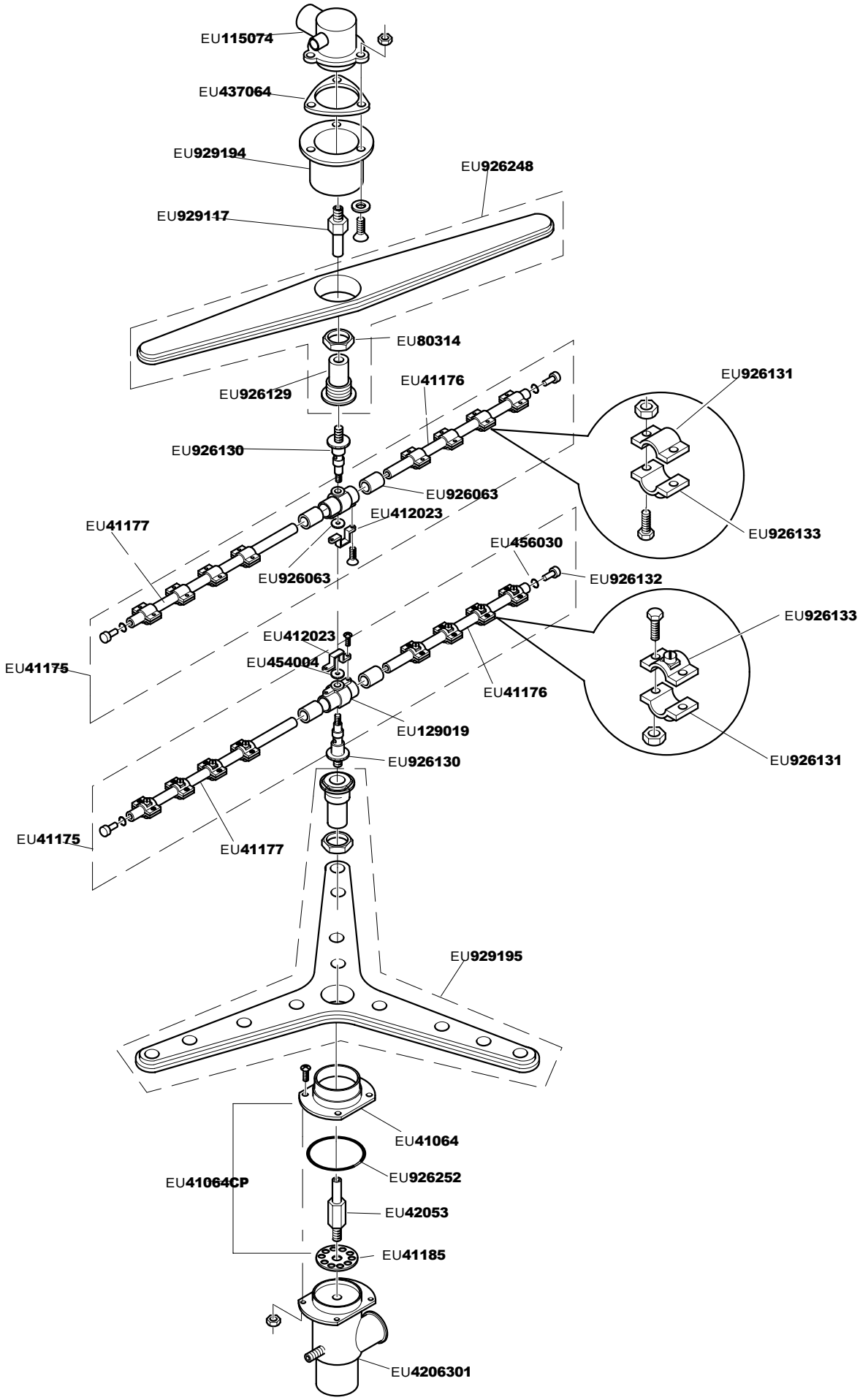
EU115074
EU437064
EU929194
EU926248
EU929117
EU80314
EU926129
EU41176
EU926131
EU926130
EU926063
EU412023
EU926133
EU41177
EU456030
EU926063
EU926132
EU926133
EU412023
EU41175
EU454004
EU41176
EU129019
EU926131
EU926130
EU41175
EU41177
EU929195
EU41064
EU926252
EU41064CP
EU42053
EU41185
EU4206301

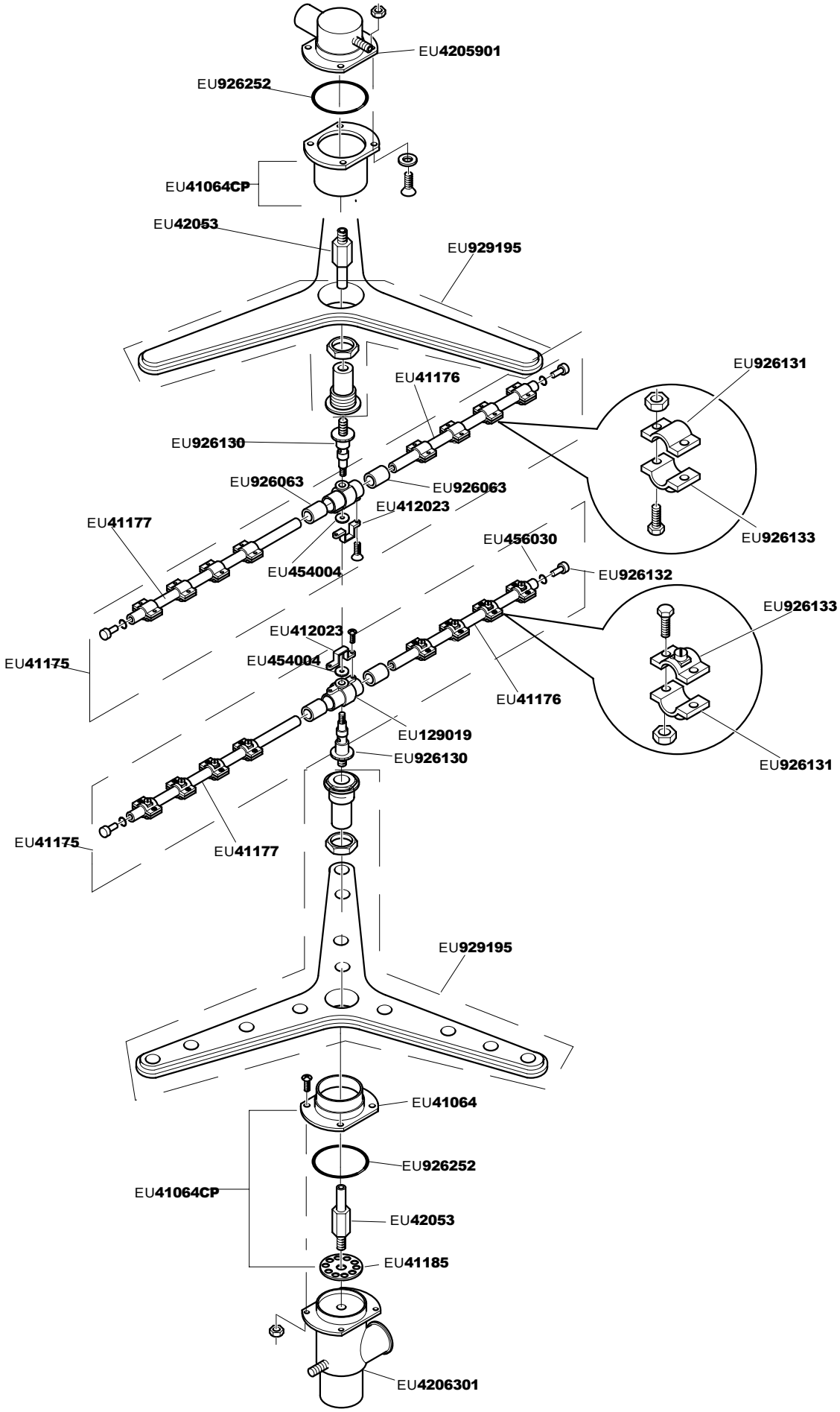
EU4205901
EU926252
EU41064CP
EU42053
EU929195
EU926131
EU41176
EU926130
EU926063
EU926063
EU412023
EU41177
EU926133
EU456030
EU454004
EU926132
EU926133
EU412023
EU41175
EU454004
EU41176
EU129019
EU926130
EU926131
EU41175
EU41177
EU929195
EU41064
EU926252
EU41064CP
EU42053
EU41185
EU4206301

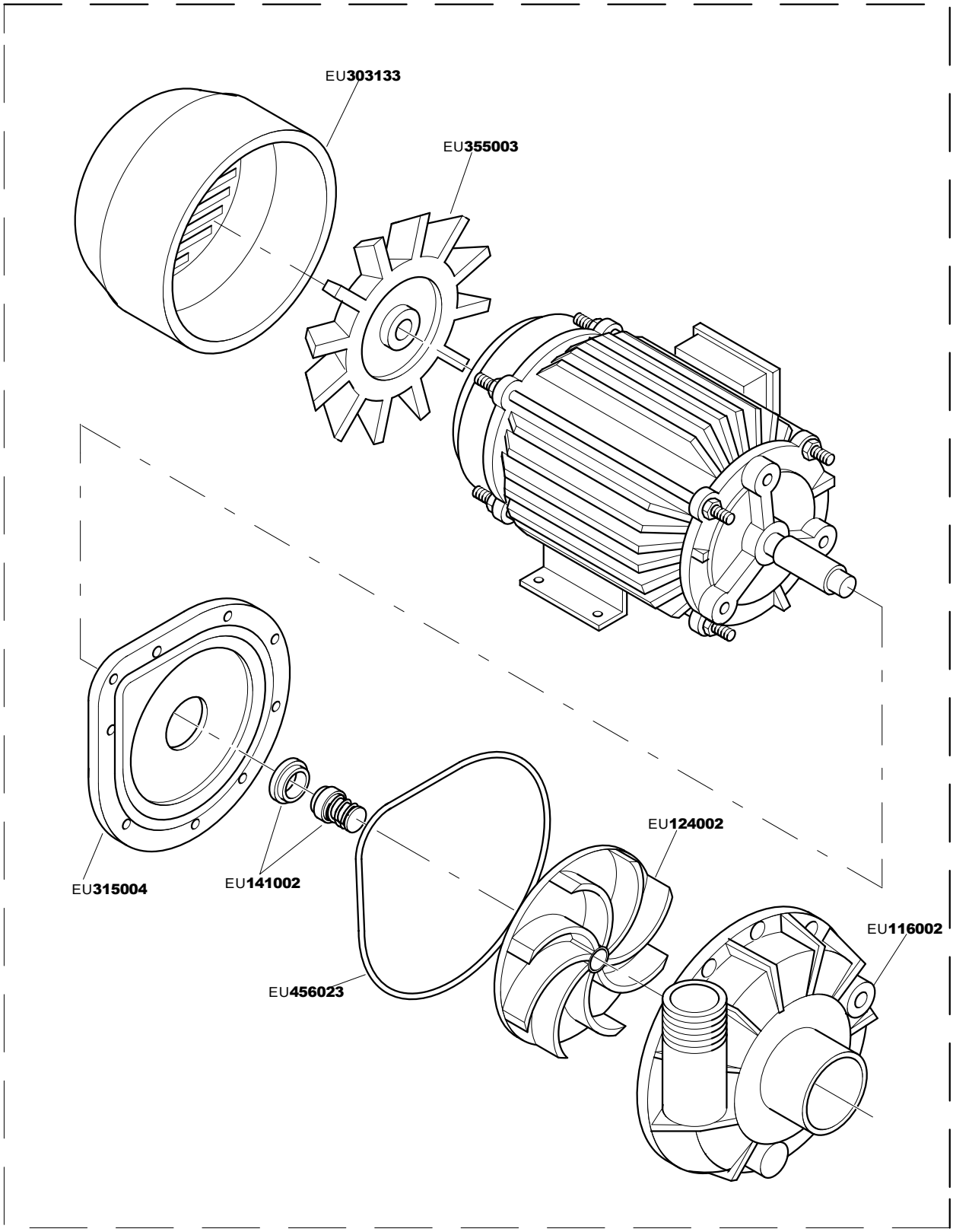
EU303133
EU355003
EU315004
EU141002
EU124002
EU456023
EU116002

EU9**29123**

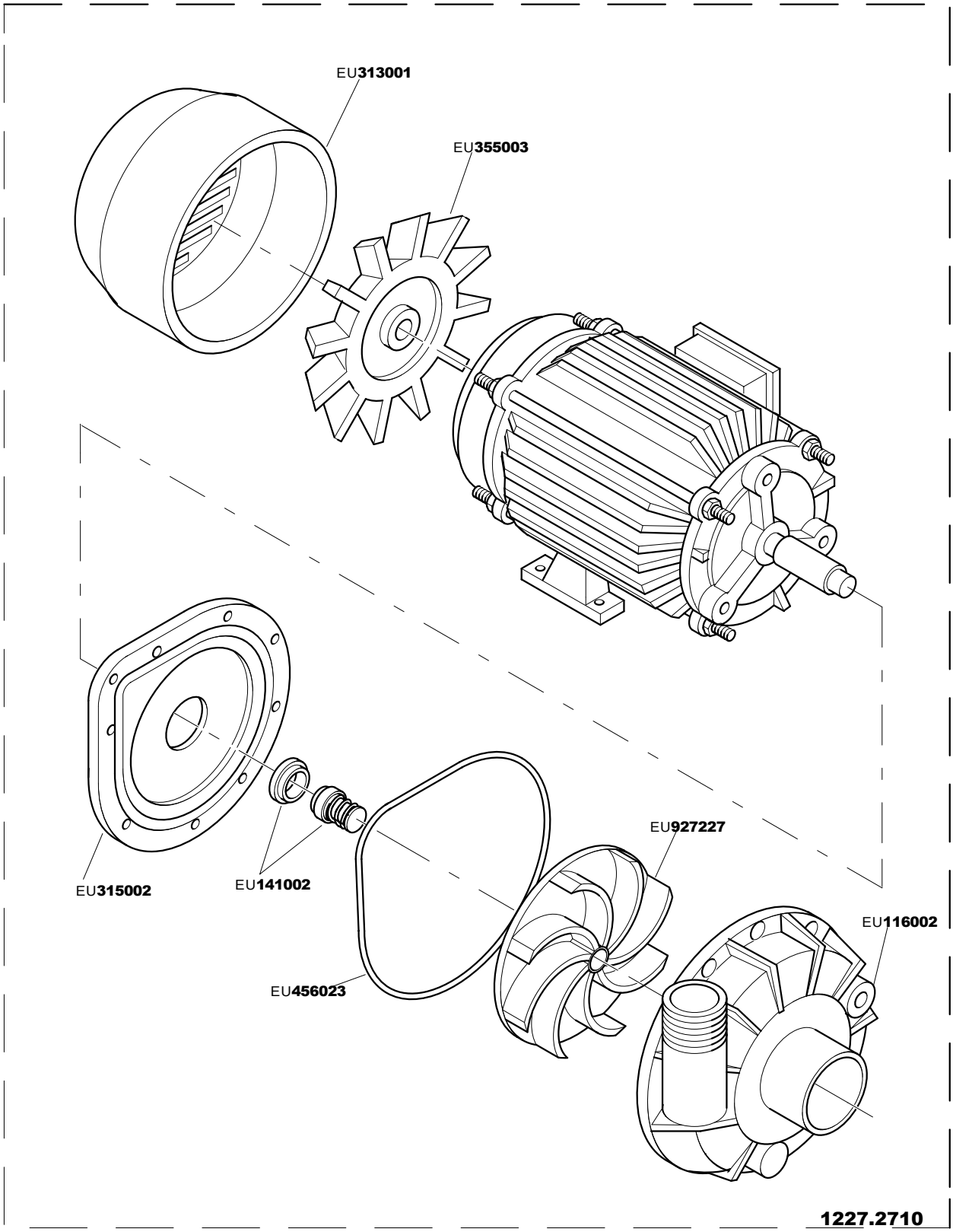
EU313001
EU355003
EU315002
EU141002
EU927227
EU116002
EU456023
1227.2710

EU9**29162**

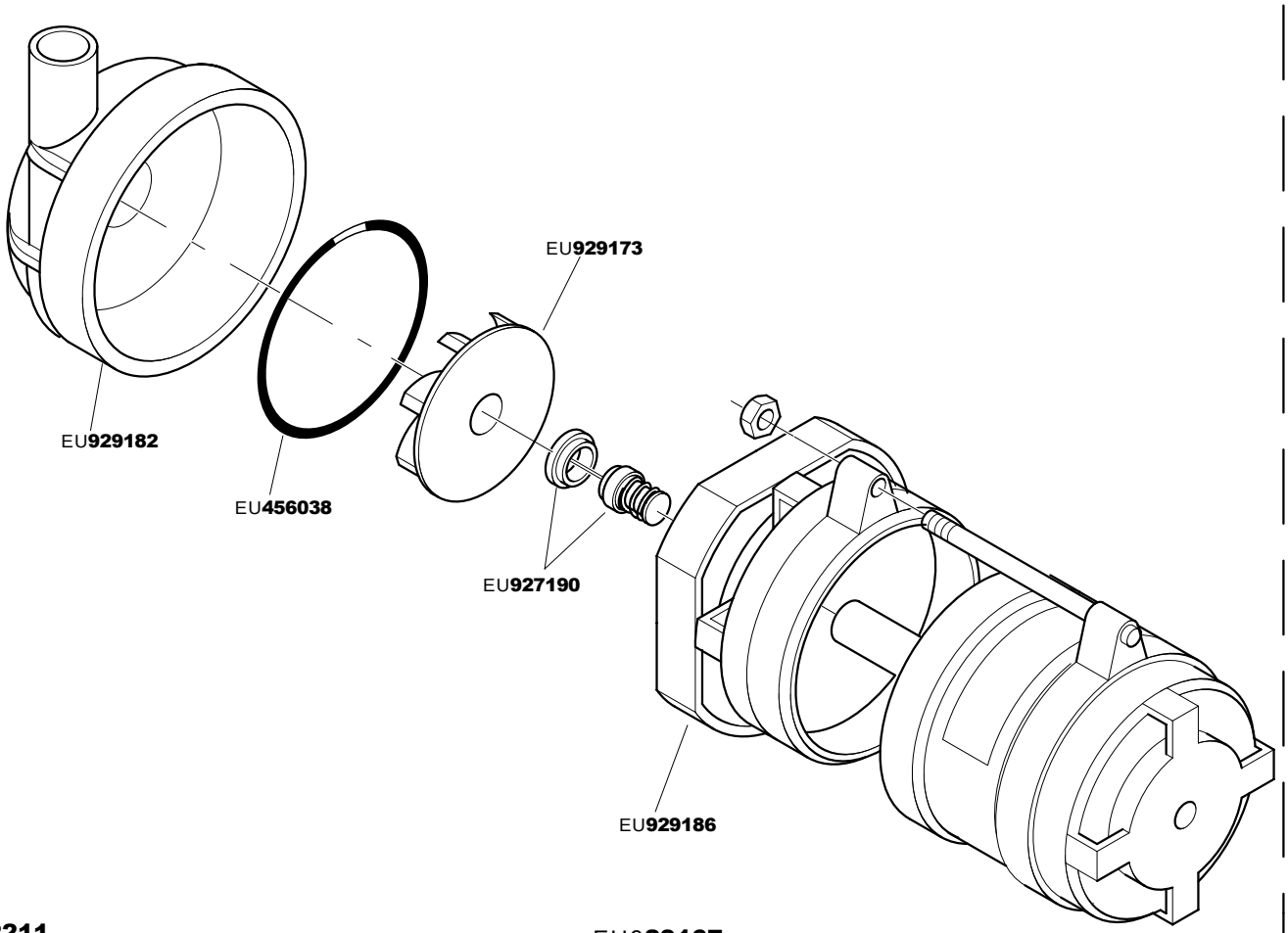

2211 EU9**29167**

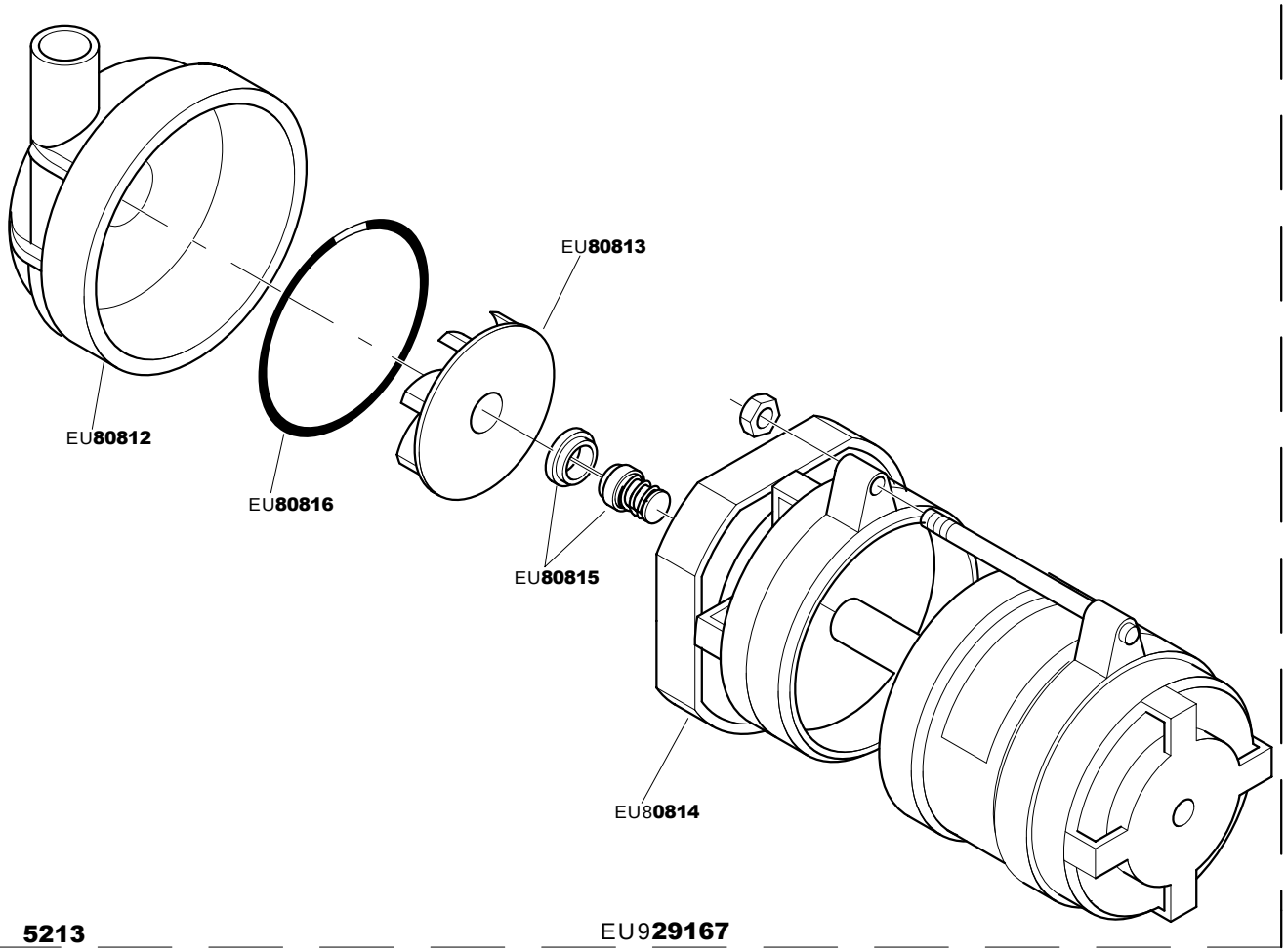

5213 EU9**29167**