Modello/Type: **60/60 FRE**

cod./num. 2531458.00

data/date: 24/06/2013

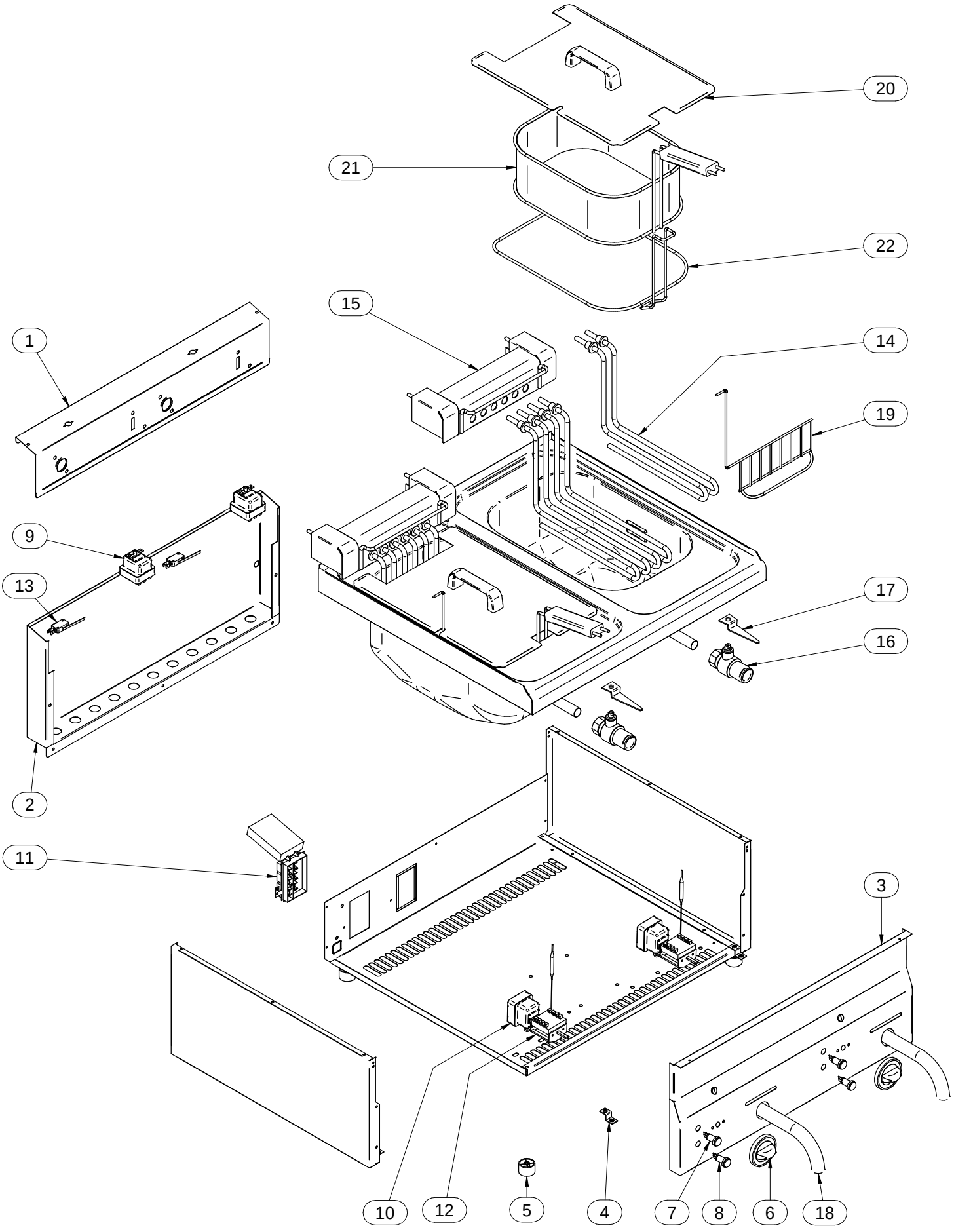

Modello Type:	60/60 FRE				cod. / num.	2531459.00
					data / date:	24/06/2013
POS. ITEM	CODICE CODE	DESCRIZIONE	DESCRIPTION	DENOMINATION	BENENNUNG	NOTE / NOTES
1	611.728.00	ALZATINA	UPSTAND	DOSSERET	AUFKANTUNG	
2	621.752.00	PANNELLO POSTERIORE	BACK PANEL	PANNEAU POSTERIEUR	HINTERBRETT	
3	256.101.00	CRUSCOTTO	CONTROL PANEL	BANDEAU	BEDIENBLENDE	
4	256.002.00	STAFFA FISSAGGIO CRUSCOTTO	CONTROL PANEL FIXING BRACKET	EQUERRE FIXATION BANDEAU	BEFESTIGUNGSWINKEL BEDIENBLENDE	
5	651.001.00	PIEDINO	FOOT	PIED	STELLFUSS	FROM - 01/1999 TO - 05/2013
	651.001.13	PIEDINO	FOOT	PIED	STELLFUSS	FROM - 06/2013 TO - ……..
6	612.004.00	MANOPOLA	KNOB	BOUTON	DREHKNOPF	
7	663.043.00	SPIA VERDE	GREEN INDICATOR LIGHT	LAMPE TEMOIN VERTE	GRUENE KONTROLLAMPE	
8	663.044.00	SPIA ARANCIO	ORANGE INDICATOR LIGHT	LAMPE TEMOIN ORANGE	ORANGE KONTROLLAMPE	
9	661.048.00	TERMOSTATO SICUREZZA	SAFETY THERMOSTAT	THERMOSTAT DE SECURITE	TEMPERATURBEGRENZER	
10	661.041.00	TERMOSTATO	THERMOSTAT	THERMOSTAT	THERMOSTAT	
11	663.040.00	MORSETTIERA	TERMINAL BOARD	BORNES	KLEMMENBRETT	
12	661.000.00	COMMUTATORE	CHANGE-OVER SWITCH	COMMUTATEUR	UMSCHALTER	
13	761.004.00	MICROINTERRUTTORE	MICROSWITCH	MICROINTERRUPTEUR	SICHERUNGSSCHALTER	
14	665.028.00	RESISTENZA	HEATING ELEMENT	RESISTANCE	HEINZELEMENT	
15	256.075.00	SUPPORTO RESISTENZE	HEATING ELEMENTS SUPPORT	SUPPORT ÉLÉMENTS CHAUFFANTS	HEIZELEMENTE TRÄGER	
16	256.047.00	RUBINETTO	TAP	ROBINET	WASSERHAHN	
17	623.024.00	LEVA RUBINETTO	TAP LEVER	LEVIER ROBINET	HAHNHEBEL	
18	631.000.00	SCARICO	DRAIN	VIDANGE	ABLAUF	
19	683.007.00	BLOCCO RESISTENZE	HEATING ELEMENTS LOCK	BLOCAGE ÉLÉMENTS CHAUFFANTS	HEIZELEMENTEBLOCKIERUNG	

Modello Type:	60/60 FRE				cod. / num.	2531459.00
					data / date:	24/06/2013
POS. ITEM	CODICE CODE	DESCRIZIONE	DESCRIPTION	DENOMINATION	BENENNUNG	NOTE / NOTES
20	611.073.00	COPERCHIO	LID	COUVERCLE	DECKEL	
21	683.000.00	CESTELLO	BASKET	PANIER	KORB	
22	683.001.23	FILTRO	FILTER	FILTER	FILTER	
23						
24						
25						
26						
27						
28						
29						
30						
31						
32						
33						
34						
35						
36						
37						
38						
39						