SIMAG

Electronic modular flaker

SP 405
SP 605

R 404 VERSION

SPARE PARTS LIST
CATALOGO RICAMBI
CATALOGUE PIÈCES DÉTACHÉES
ERSATZTEILENKATALOG

090090.11 REV. 07/2006

PAGE PAGINA PAGE SEITE	TABLE OF CONTENTS	INDICE	TABLE DES MATIÉRES	INHALTVERZEICHNIS
1	TABLE OF CONTENTS	INDICE	TABLE DES MATIÉRES	INHALTVERZEICHNIS
2-3	UNIT PANELS	ASSIEME MOBILE	ENS. CARROSSERIE	MACHINENGEHAUSE
4-5	REFRIGERANT SYSTEM AIR COOLED	SISTEMA REFRIGERANTE RAFFR. AD ARIA	CIRCUIT FRIGORIFIQUE REFROID. A AIR	GEFRIERSYSTEM LUFTGEKÜHLT
6-7	REFRIGERANT SYSTEM WATER COOLED	SISTEMA REFRIGERANTE RAFFR. AD ACQUA	CIRCUIT FRIGORIFIQUE REFROID. A EAU	GEFRIERSYSTEM WASSERGEKÜHLT
8-9	WATER SYSTEM AND INSULATIONS	CIRCUITO IDRAULICO ED ISOLAMENTI	CIRCUIT HYDRAULIQUE ET INSULATIONS	WASSERKREISLAUF UND ISOLIERUNGEN
10-11	FREEZER AND GEAR REDUCER ASSY	ASSIEME FREEZER E RIDUTTORE	ENS. FREEZER ET MOTOREDUCTEUR	GEFRIERZYLINDER-GETRIEBEEINHEIT
12-13	P.C. BOARD AND SENSORS ASSY	SCHEDA ELETTRONICA E SENSORI	ENS. CARTE ELECTRONIQUE ET DETECTEURS	ELEKTRONISCHE KARTE UND TEMPERRATURFUEHLERENHEIT
14	COMPRESSOR AND ELECTRIC COMPONENT CHARTS	TABELLA COMPRESSORI E COMPONENTI ELETTRICI	LISTE DES COMPRESSEURS ET COMPOSANTS ELECTRIQUE	KOMPRESSOR UND ELEKTRISCHE BESTANDTEILE

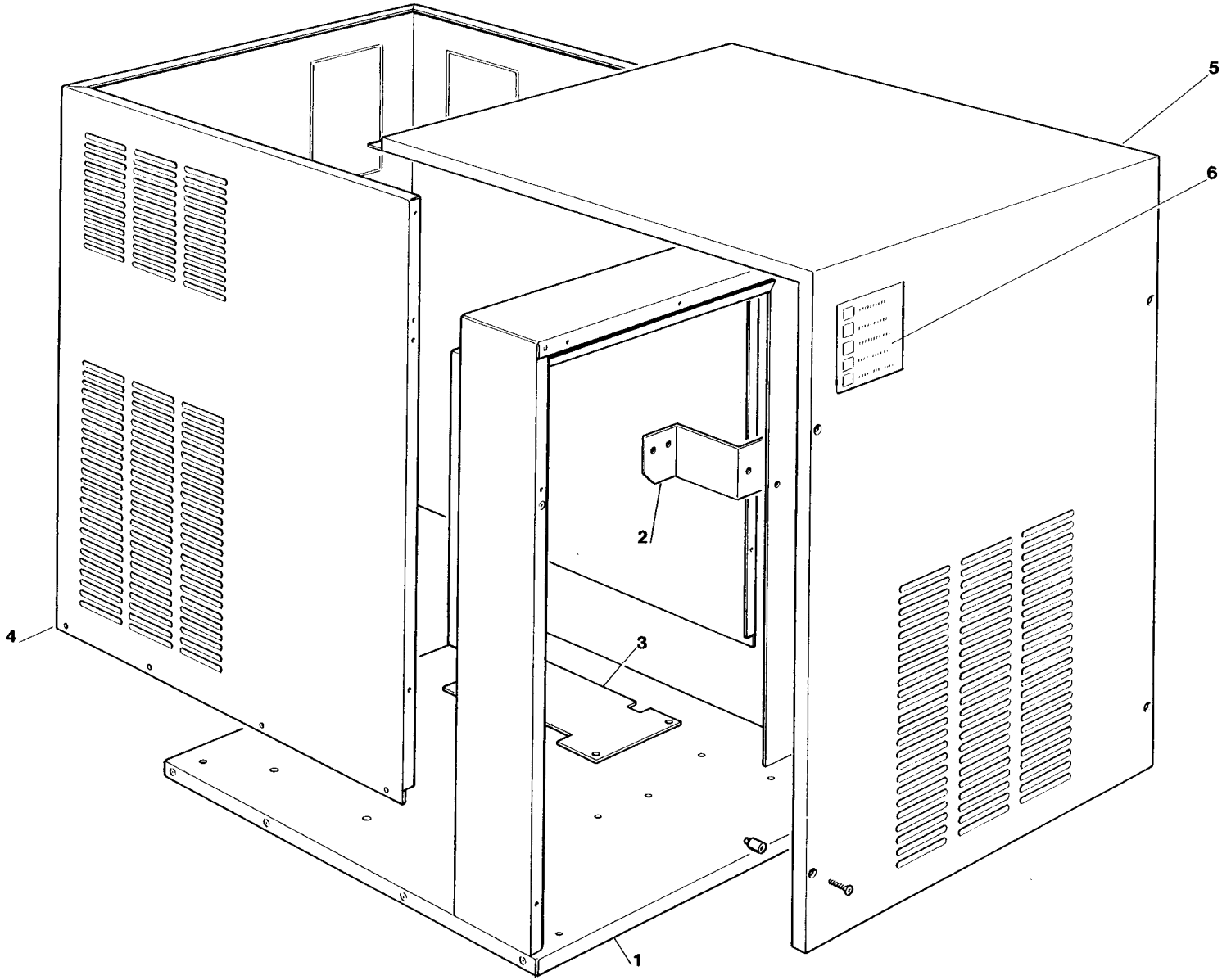
5
6
2
4
3
1

SP 405 - SP 605 - UNIT PANELS - ASSIEME MOBILE - ENS. CARROSSERIE - MACHINE GEHAUSE

ITEM NO POS NO REP. NO REF. NO	PART NO - CODICE REFERENCE - STUECK NR **SP 405**	**SP 605**	DESCRIPTION	DESCRIZIONE	DESIGNATION	BESCHREIBUNG
1	781398 00	781398 00	FRAME ASSY S.S.	ASSIEME TELAIO ACCIAIO INOX	ENSAMBLE CHASSIS ACIER INOX	CHASSISRAHMEN EDELSTAHL
2	703221 00	703221 00	WATER RESERVOIR BRACKET	SUPPORTO VASCH. GALLEGGIANTE	SUPPORT FLOTTEUR	SCHWIMMERHALTER
3	704231 01	704231 01	GEAR MOTOR BASE	SUPPORTO MOTORIDUTTORE	SUPPORT MOTOREDUCTEUR	GETRIEBEMOTORHALTER
4	721839 00	721840 00	SIDES/REAR PANEL S.S.	PANNELLO LATER./POSTER. ACC. INOX	PANNEAU COTE/ARRIERE ACIER INOX	EDELSTAHL SEITEN-RÜCKWAND
5	721838 00	721838 01	FRONT/TOP PANEL S.S.	PANNELLO FRONT./SUPER. ACCIAIO INOX	PANNEAU AVANT/SUP. ACIER INOX	EDELSTAHL FRONT-OBERWAND
6	650624 12	650624 12	LABEL	ADESIVO SEGNALETICO	ETIQUETTE	ETIKETT
*	650805 35	–	SP 405 LOGO	TARGHETTA SP 405	EMBLEME SP 405	SP 405 ABGEBILDET
*	–	650805 36	SP 605 LOGO	TARGHETTA SP 605	EMBLEME SP 605	SP 605 ABGEBILDET

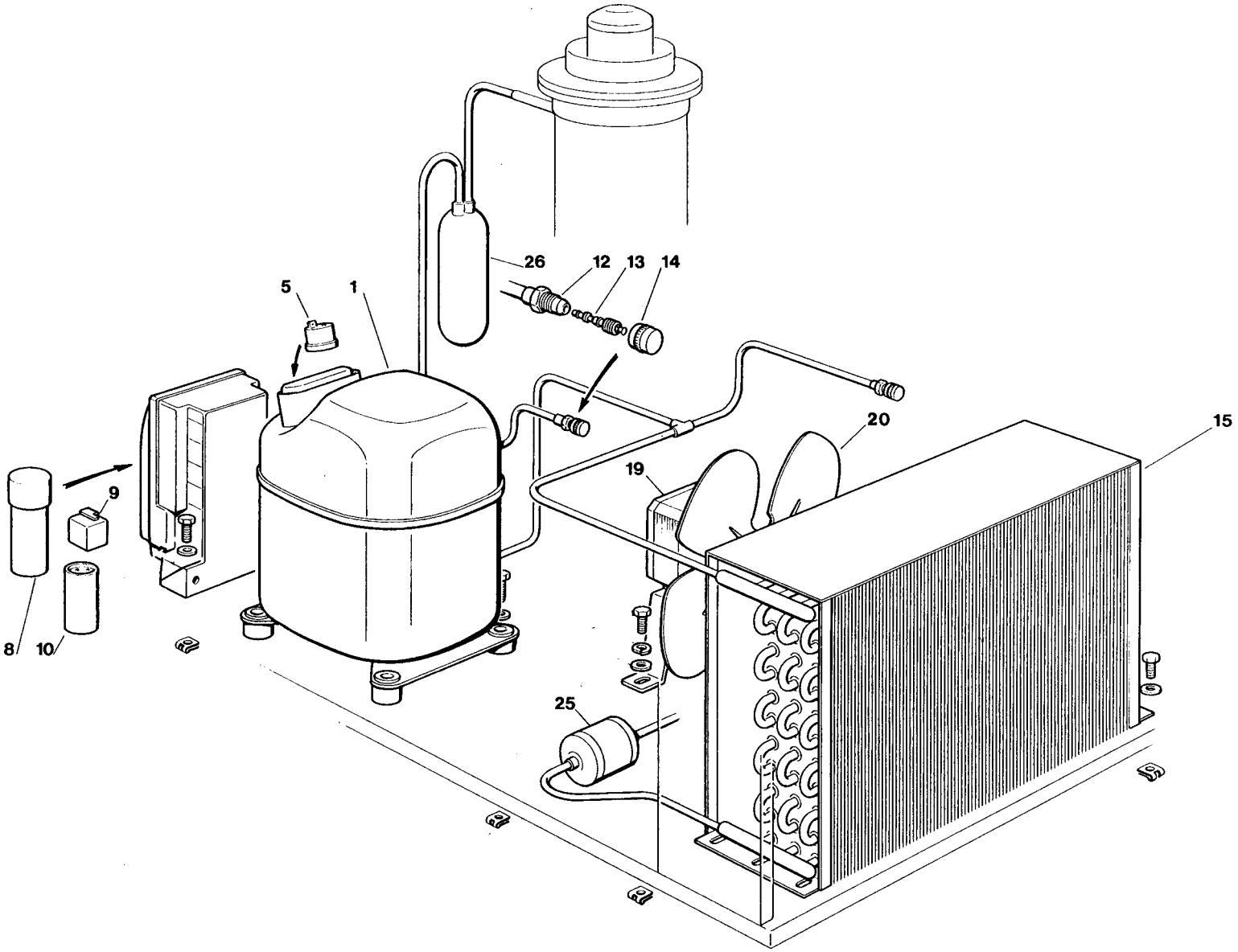
26
12
13
14
5
1
20
15
19
9
8
10
25

SP 405 - SP 605 - REFRIGERANT SYSTEM AIR COOLED - SISTEMA REFRIGERANTE RAFFR. AD ARIA
CIRCUIT FRIGORIFIQUE REFROID. PAR AIR - LUFTGEKÜHLT GEFRIERSYSTEM

ITEM NO POS NO REP. NO REF. NO	PART NO - CODICE REFERENCE - STUECK NR **SP 405**	 **SP 605**	DESCRIPTION	DESCRIZIONE	DESIGNATION	BESCHREIBUNG
1	670099 04 ***** 670099 09	670099 05 670099 06 670099 13	COMPRESSOR ASSY 230/50/1 COMPRESSOR ASSY 400/50/3 COMPRESSOR ASSY 230/60/1	ASSIEME COMPRESSORE 230/50/1 ASSIEME COMPRESSORE 400/50/3 ASSIEME COMPRESSORE 230/60/1	ENSAMBLE COMPRESSEUR 230/50/1 ENSAMBLE COMPRESSEUR 400/50/3 ENSAMBLE COMPRESSEUR 230/60/1	KOMPRESSOR 230/50/1 KOMPRESSOR 400/50/3 KOMPRESSOR 230/60/1
5	620058 78 ***** 620058 81	620058 57 620058 58 620058 85	PROTECTOR 230/50/1 PROTECTOR 400/50/3 PROTECTOR 230/60/1	PROTETTORE 230/50/1 PROTETTORE 400/50/3 PROTETTORE 230/60/1	PROTECTEUR 230/50/1 PROTECTEUR 400/50/3 PROTECTEUR 230/60/1	SCHUTZGERÄT 230/50/1 SCHUTZGERÄT 400/50/3 SCHUTZGERÄT 230/60/1
8	620167 21	620167 54	RUN CAPACITOR 230/50-60	CAPACITA DI MARCIA 230/50-60	CAPACITÉ PERMANENCE 230/50-60	BETRIEB KONDENSATOR 230/50-60
9	620057 46 620057 50	620057 47 620057 54	START RELAY 230/50/1 START RELAY 230/60/1	RELE DI AVVIAMENTO 230/50/1 RELE DI AVVIAMENTO 230/60/1	RELAIS DE DEMARRAGE 230/50/1 RELAIS DE DEMARRAGE 230/60/1	RELAIS 230/50/1 RELAIS 230/60/1
10	620167 00 620167 00	620167 00 620167 00	START CAPACITOR 230/50/1 START CAPACITOR 230/60/1	CAPACITA D'AVVIAMENTO 230/50/1 CAPACITA D'AVVIAMENTO 230/60/1	CAPACITÉ DE DEMARRAGE 230/50/1 CAPACITÉ DE DEMARRAGE 230/60/1	START KONDENSATOR 230/50/1 START KONDENSATOR 230/60/1
12	650109 00	650109 00	VALVE BODY	CORPO VALVOLA	CORPS DE VANNE	VENTILGEHAUSE
13	670012 00	670012 00	VALVE PISTON	PISTONCINO VALVOLA	PISTON	VENTILKOLBEN
14	650106 00	650106 00	VALVE CAP	CAPPUCCIO VALVOLA	CAPUCHON DE VANNE	VENTILKLAPPE
15	620436 00	620438 00	AIR COOLED CONDENSER	CONDENSATORE AD ARIA	CONDENSEUR A AIR	LUFTGEKUEHLT KONDENSATOR
19	620419 04	620419 07	FAN MOTOR	MOTORE VENTILATORE	MOTEUR VENTILATEUR	LUFTER MOTOR
20	620419 34	620419 36	FAN BLADE	VENTOLA	HELICE	FLUEGEL
25	670006 01	670006 01	DRIER	FILTRO DEUMIDIFICATORE	FILTRE DESHYDRATEUR	TROCKNER
26	784450 01	784450 03R	SUCTION LINE/ACCUMULATOR	ACCUMUL. E LINEA ASPIRAZIONE	ENS. ASPIRATION/ACCUMULATEUR	SAMMLER UND SAUGLEITUNGEN

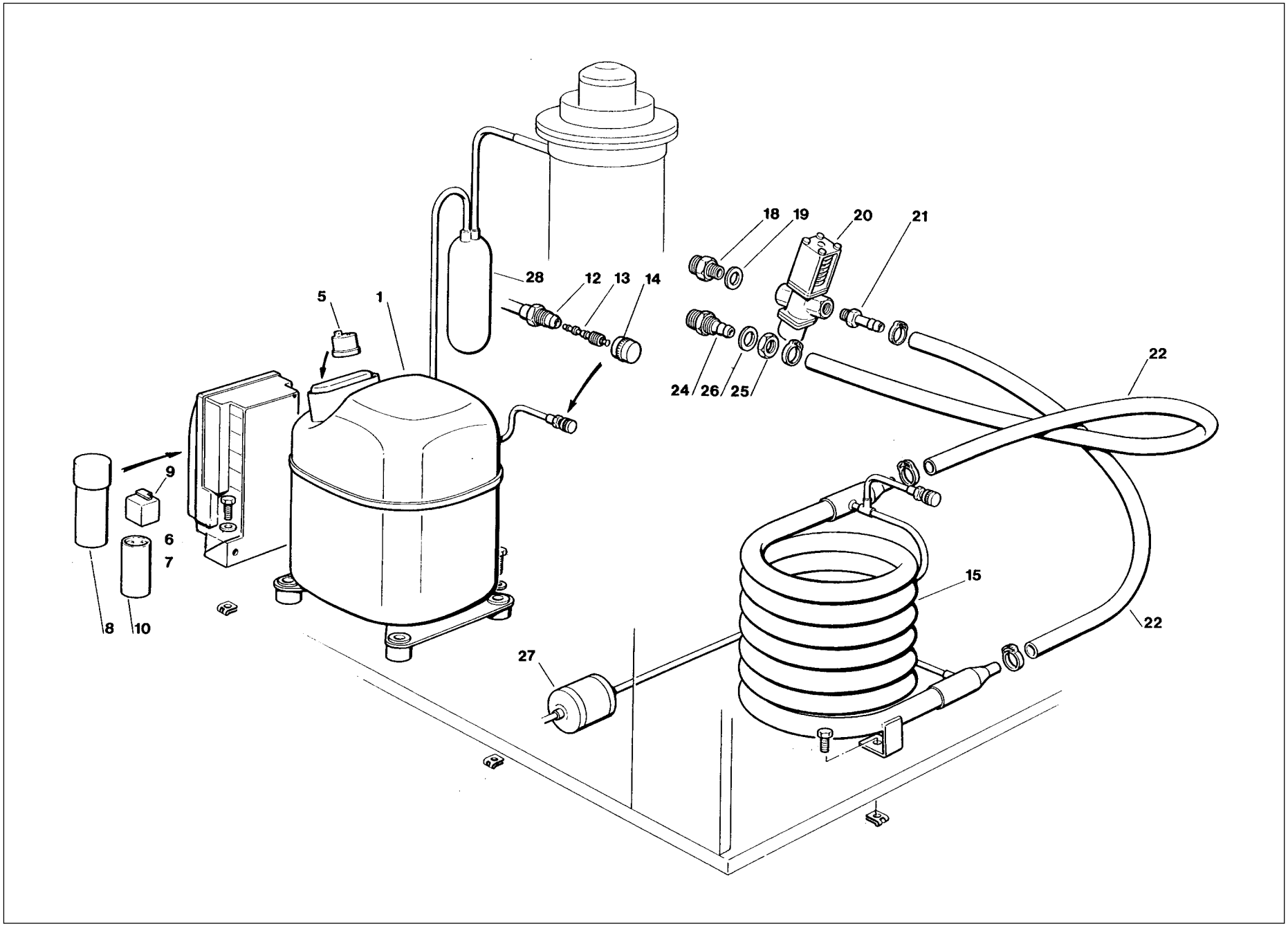
1
5
6
7
8
9
10
12
13
14
15
18
19
20
21
22
22
24
25
26
27
28

SP 405 - SP 605 - REFRIGERANT SYSTEM WATER COOLED - SISTEMA REFRIGERANTE RAFFR. AD ACQUA
CIRCUIT FRIGORIFIQUE REFROID. PAR EAU - WASSERGEKÜHLT GEFRIERSYSTEM

ITEM NO POS NO REP. NO REF. NO	PART NO - CODICE REFERENCE - STUECK NR SP 405	SP 605	DESCRIPTION	DESCRIZIONE	DESIGNATION	BESCHREIBUNG
1	670099 04 ***** 670099 09	670099 05 670099 06 670099 13	COMPRESSOR ASSY 230/50/1 COMPRESSOR ASSY 400/50/3 COMPRESSOR ASSY 230/60/1	ASSIEME COMPRESSORE 230/50/1 ASSIEME COMPRESSORE 400/50/3 ASSIEME COMPRESSORE 230/60/1	ENSAMBLE COMPRESSEUR 230/50/1 ENSAMBLE COMPRESSEUR 400/50/3 ENSAMBLE COMPRESSEUR 230/60/1	KOMPRESSOR 230/50/1 KOMPRESSOR 400/50/3 KOMPRESSOR 230/60/1
5	620058 78 ***** 620058 81	620058 57 620058 58 620058 85	PROTECTOR 230/50/1 PROTECTOR 400/50/3 PROTECTOR 230/60/1	PROTETTORE 230/50/1 PROTETTORE 400/50/3 PROTETTORE 230/60/1	PROTECTEUR 230/50/1 PROTECTEUR 400/50/3 PROTECTEUR 230/60/1	SCHUTZGERÄT 230/50/1 SCHUTZGERÄT 400/50/3 SCHUTZGERÄT 230/60/1
8	620167 21	620167 54	RUN CAPACITOR 230/50-60	CAPACITA DI MARCIA 230/50-60	CAPACITÉ PERMANENCE 230/50-60	BETRIEB KONDENSATOR 230/50-60
9	620057 46 620057 50	620057 47 620057 54	START RELAY 230/50/1 START RELAY 230/60/1	RELE DI AVVIAMENTO 230/50/1 RELE DI AVVIAMENTO 230/60/1	RELAIS DE DEMARRAGE 230/50/1 RELAIS DE DEMARRAGE 230/60/1	RELAIS 230/50/1 RELAIS 230/60/1
10	620167 00 620167 26	620167 00 620167 00	START CAPACITOR 230/50/1 START CAPACITOR 230/60/1	CAPACITA D'AVVIAMENTO 230/50/1 CAPACITA D'AVVIAMENTO 230/60/1	CAPACITÉ DE DEMARRAGE 230/50/1 CAPACITÉ DE DEMARRAGE 230/60/1	START KONDENSATOR 230/50/1 START KONDENSATOR 230/60/1
12	650109 00	650109 00	VALVE BODY	CORPO VALVOLA	CORPS DE VANNE	VENTILGEHAUSE
13	670012 00	670012 00	VALVE PISTON	PISTONCINO VALVOLA	PISTON	VENTILKOLBEN
14	650106 00	650106 00	VALVE CAP	CAPPUCCIO VALVOLA	CAPUCHON DE VANNE	VENTILKLAPPE
15	620331 00	620331 01	WATER COOLED CONDENSER	CONDENSATORE AD ACQUA	CONDENSEUR A EAU	WASSERGEKUEHLT KONDENSATOR
18	733204 00	733204 00	WATER INLET FITTING	RACCORDO INGRESSO ACQUA	RACCORD ARRIVÉE D'EAU	WASSEREINLAUFSTÜCK
19	400031 01	400031 01	FIBER WASHER	RONDELLA IN FIBRA	RONDELLE EN FIBRE	FIBER SCHEIBE
20	620111 00	620111 00	WATER REGULATING VALVE	VALVOLA PRESSOSTATICA	VANNE A EAU PRESSOSTATIQUE	WASSERREGLERVENTIL
21	650754 00	733173 01	OUTLET VALVE FITTING	RACCORDO USCITA VALVOLA PRESS.	RACCORD SORTIE VALVE PRESS.	WASSERREGLEREABFLUSSTUECK
22	281900 03	281900 03	PLASTIC TUBE-PER METER	TUBO IN PLASTICA-PER METRO	TUYAU EN PLASTIQUE-POUR METRE	PLASTIK ROHR-PRO METER
24	733174 00	733174 00	WATER DRAIN FITTING	RACCORDO SCARICO ACQUA	RACCORD ÉVACUATION EAU	WASSERABFLUSSCHLAUCH
25	400076 00	400076 00	NUT	DADO	ECROU	MUTTER
26	400031 00	400031 00	FIBER WASHER	RONDELLA IN FIBRA	RONDELLE EN FIBRE	FIBER SCHEIBE
27	670006 01	670006 01	DRIER	FILTRO DEUMIDIFICATORE	FILTRE DESHYDRATEUR	TROCKNER
28	784450 01	784450 03R	SUCTION LINE/ACCUMULATOR	ACCUMUL. E LINEA ASPIRAZIONE	ENS. ASPIRATION/ACCUMULATEUR	SAMMLER LEITUNGEN

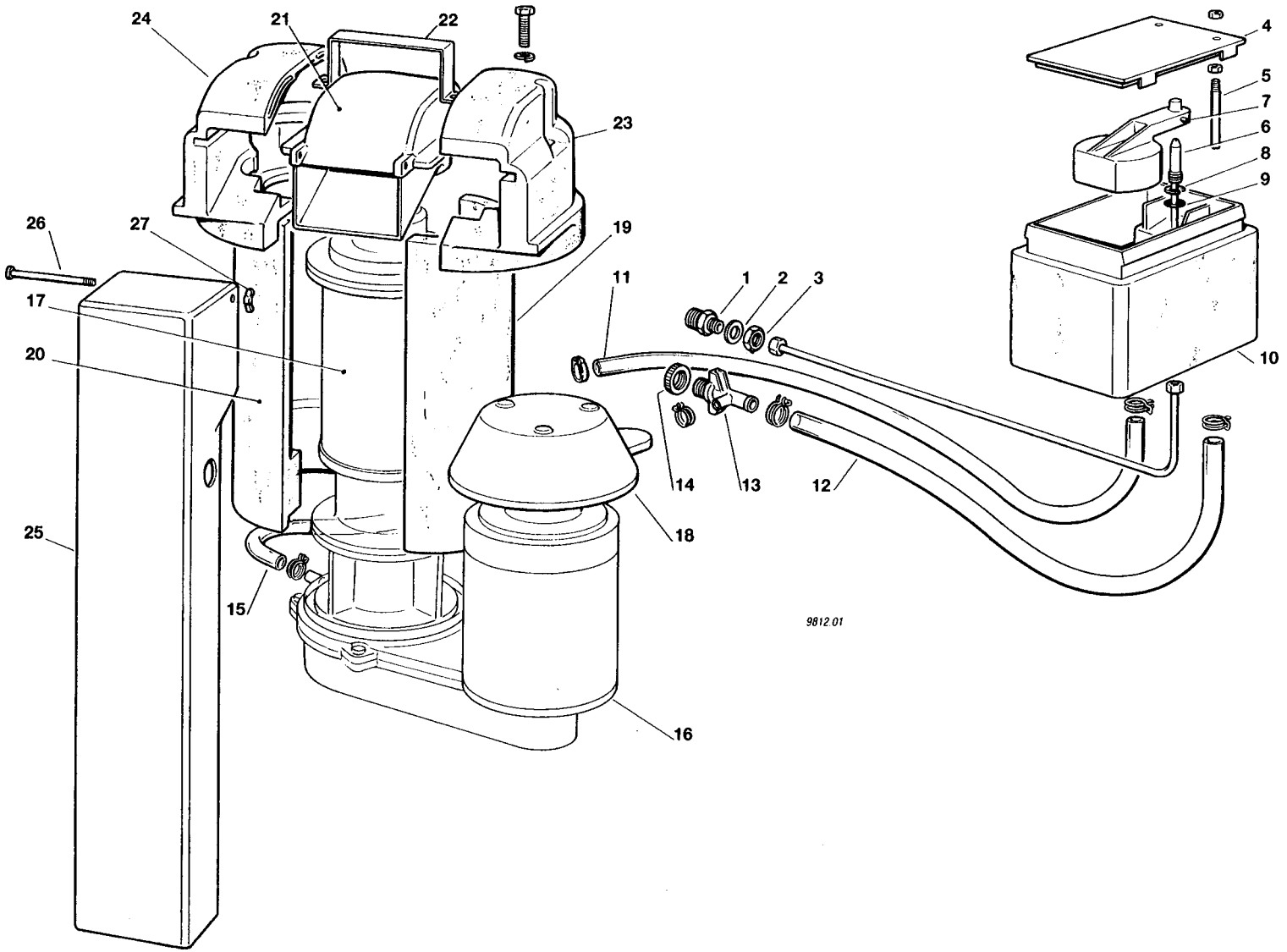
24
21
22
23
4
5
7
6
8
9
26
27
19
11
1
2
3
17
20
10
14
13
12
25
18
15
16
9812.01

SP 405 - SP 605 - WATER SYSTEM AND INSULATIONS - CIRCUITO IDRAULICO ED ISOLAMENTI
CIRCUIT HYDRAULIQUE ET ISOLATIONS - WASSERKREISLAUF UND ISOLIERUNGEN

ITEM NO POS NO REP. NO REF. NO	PART NO - CODICE REFERENCE - STUECK NR **SP 405**	**SP 605**	DESCRIPTION	DESCRIZIONE	DESIGNATION	BESCHREIBUNG
1	733205 00	733205 00	WATER INLET FITTING	RACCORDO INGRESSO ACQUA	RACCORD ARRIVEE D'EAU	WASSEREINLAUFSTUECK
2	400031 00	400031 00	FIBER WASHER	RONDELLA IN FIBRA	RONDELLE EN FIBRE	FIBER SCHEIBE
3	400030 01	400030 01	NUT	DADO	ECROU	MUTTER
4	660363 00	660363 00	WATER RESERVOIR COVER	COPERCHIO VACHETTA	COUVERCLE	BECKENABDECKUNG
5	724215 06	724215 06	WATER LEVEL METAL PIN	PERNO SENSORE LIVELLO ACQUA	DETECTEUR NIVEAU EAU	FÜHLERSTIFT-WASSERNIVEAU
6	783153 00R	783153 00R	NOZZLE	UGELLO	GICLEUR	VENTILSDUESE
7	650585 00	650585 00	FLOAT VALVE ASSY	ASSIEME GALLEGGIANTE	ENS. VANNE A FLOTTEUR	SCHWIMMERVENTIL-EINHEIT
8	460038 02	460038 02	CLIP RING	ANELLO SEEGER	CIRCLIP	RING
9	640100 00	640100 00	O RING	GUARNIZIONE OR	JOINT TORIQUE	SIMMERING
10	793126 01	793126 01	WATER RESERVOIR ASSY	ASS. VASCHETTA GALLEGGIANTE	ENS. RÉSERVOIR	BECKEN/SCHWIMMERVENTILEINHEIT
11	281822 00	281822 00	PLASTIC TUBE - PER MTR	TUBO IN PLASTICA - PER METRO	TUYAU EN PLASTIQUE - POUR METRE	PLASTIK ROHR - PRO METER
12	281832 00	281832 00	PLASTIC TUBE - PER MTR	TUBO IN PLASTICA - PER METRO	TUYAU EN PLASTIQUE - POUR METRE	PLASTIK ROHR - PRO METER
13	660224 00	660224 00	WATER DRAIN FITTING	RACCORDO SCARICO ACQUA	RACCORD EVACUATION EAU	WASSERABFLUSSANSCHLUSSE
14	660535 00	660535 00	PLASTIC RING NUT	GHIERA IN PLASTICA	COLLIER DE SERRAGE EN PLASTIQUE	PLASTIKRINGMUTTER
15	610163 02	610163 02	PLASTIC TUBE	TUBO IN PLASTICA	TUYAU EN PLASTIQUE	PLASTIK ROHR
16	794215 08 R	794215 08 R	GEAR REDUCER ASSY	ASS. MOTORIDUTTORE	ENS .MOTOREDUCTEUR	GETRIEBEMOTOR-EINHEIT
17	794298 02 R	794298 00 R	FREEZER ASSY	ASS. FREEZER	ENS. FREEZER	GEFRIERZYLINDEREINHEIT
18	660553 00	660553 00	GEAR MOTOR PLASTIC COVER	PROTEZIONE MOTORE	PROTECTION MOTEUR	PLASTIK MOTORSCHUTZ
19	060551 05	060551 06	KIT INSULATION FREEZER	ASSIEME ISOLAMENTO	ENS. ISOLATION	GEFRIERZYLINDERISOLIERUNG
20	060551 05	060551 06	KIT INSULATION FREEZER	ASSIEME ISOLAMENTO	ENS. ISOLATION	GEFRIERZYLINDERISOLIERUNG
21	660667 00 *	660667 00 *	PLASTIC ICE SPOUT	BOCCHETTA SCARICO GHIACCIO	BEC VERSEUR	AUSWURFSCHNAUZE
22	725035 01	725035 01	U BOLT	STAFFA	ETRIER	BÜGEL
23-24	060551 01 *	060551 01 *	SPOUT INSULATION KIT	ISOLAMENTO BOCC. KIT	ISOLATION BEC VERSEUR KIT	AUSWURFSCHNAUZEISOLIERUNG KIT
25	660573 07 *	660573 07 *	PLASTIC ICE CHUTE	CONDOTTO SCARICO GHIACCIO	GOULOTTE	EIS BUNKERAUSLAUF
26	724180 02	724180 02	METAL ROD	TIRANTE	TIRANT	STANGE
27	430083 00	430083 00	WING NUT	DADO AD ALETTE	ECROU	MUTTER
			* UP TO SP 405 S/N 1438 and SP 605 S/N 1397 USE KIT P/N 060550 00	* FINO A SP 405 S/N 1438 e SP 605 S/N 1397 USARE KIT P/N 060550 00	* JUSQU'A SP 405 S/N 1438 SP 605 S/N 1397 UTILISER KIT P/N 060550 00	* BIS SP 405 S/N 1438 SP 605 S/N 1397 GEBRAUCHEN KIT P/N 060550 00

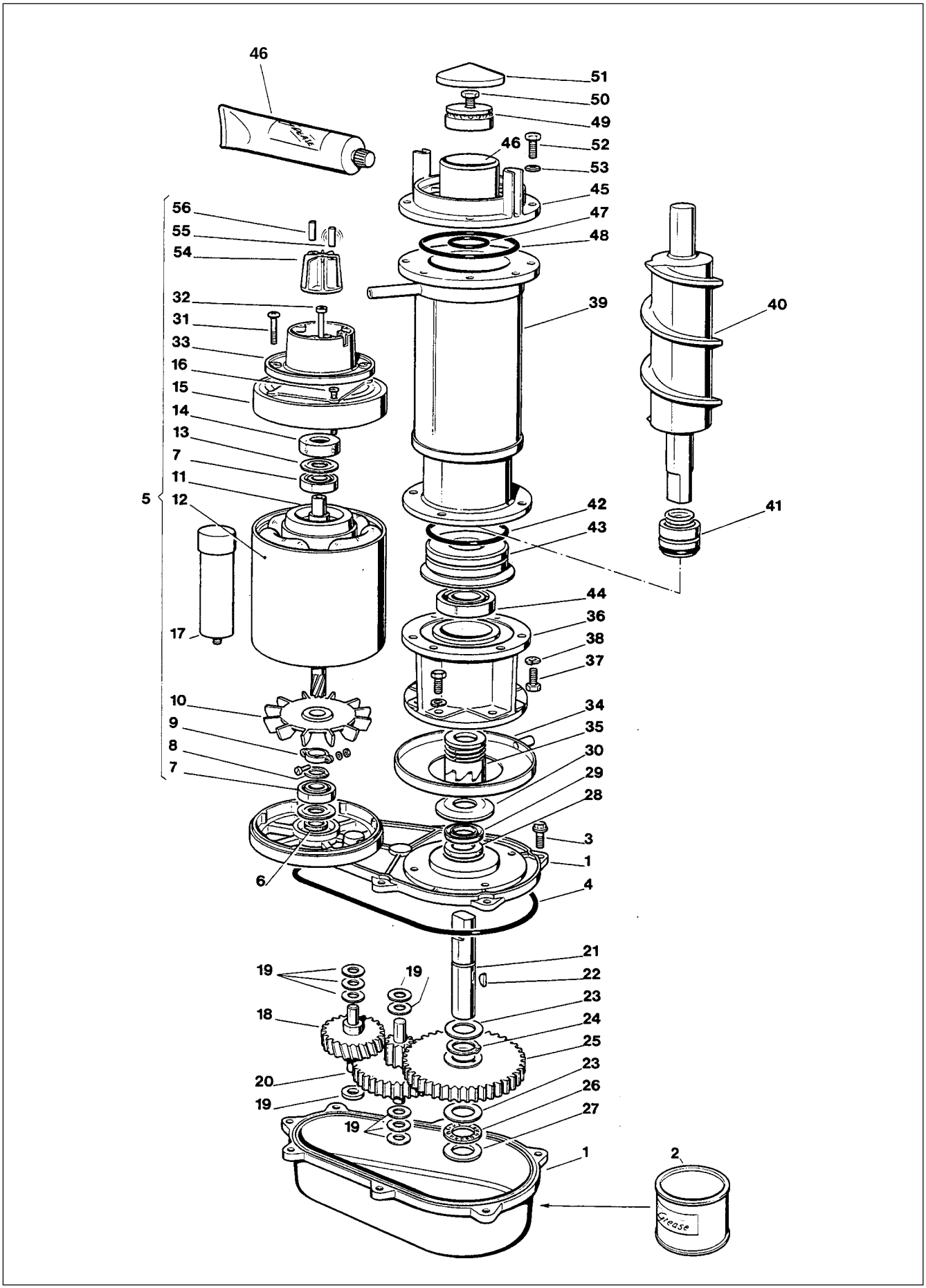
46
51
50
49
46
52
53
45
47
48
56
55
54
32
31
33
16
15
14
13
7
11
12
5
39
40
42
43
41
44
36
38
37
17
10
9
8
7
34
35
30
29
28
3
1
6
4
21
19
19
22
23
18
24
25
20
23
19
26
19
27
1
2
Grease

SP 405 - SP 605 - FREEZER AND GEAR REDUCER ASSY - ASSIEME FREEZER E RIDUTTORE
ENS. FREEZER ET MOTOREDUCTEUR - GEFRIERZYLINDER UND GETRIEBEEINHEIT

ITEM NO POS NO REP. NO REF. NO	PART NO - CODICE REFERENCE - STUECK NR		DESCRIPTION	DESCRIZIONE	DESIGNATION	BESCHREIBUNG
	SP 405	**SP 605**				
1	0A031230 01	0A031230 01	GEAR CASE ASSY	ASSIEME SCATOLA INGRANAGGI	ENS. CARTER RÉDUCTEUR	GETRIEBEGEHAUSE CPL
2	060294 01	060294 01	GREASE (1 KG)	GRASSO (1 KG)	GRAISSE (1 KG)	FETT (1 KG)
3	03001251 01	03001251 01	SCREW	VITE	VIS	SCHRAUBE
4	13000617 38	13000617 38	O RING	GUARNIZIONE OR	JOINT TORIQUE	O RING
5	060273 06	060273 06	DRIVE MOTOR ASSY	MOTORE RIDUTTORE	MOTEUR DU REDUCTEUR	MOTOREINHEIT
6	02 1606 00	02 1606 00	GEASE SEAL	PARAOLIO	PARAHUILE	SCHMIERDICHTUNG
7	651053 00	651053 00	BEARING	CUSCINETTO	ROULEMENT	LAGER
8	441800 04	441800 04	WASHER	RONDELLA	RONDELLE	SCHEIBE
9	650341 00	650341 00	CLAMP	FASCETTA	COLLIER	KLEMME
10	650340 00	650340 00	FAN BLADE	VENTOLA	HELICE	FLÜGEL/RAD
11	794216 00 R	794216 00 R	ROTOR ASSY	ASS. ROTORE	ENS. ROTOR	ROTOR EINHEIT
12	620295 00	620295 00	STATOR ASSY	ASS. STATORE	ENS. STATOR	STATOREINHEIT
13	460041 00	460041 00	SPRING	MOLLA	RESSORT	FEDER
14	640095 01	640095 01	RUBBER INSERT	INSERTO IN GOMMA	BAGUE CAOUTCHOUC	GUMMI LAGER GEHAUSE
15	650339 00	650339 00	DRIVE MOTOR COVER	COPERCHIO MOTORE	COUVERCLE MOTEUR	MOTOR DEKEL
16	420332 00	420332 00	SCREW	VITE	VIS	SCHRAUBE
17	620292 03	620292 03	CAPACITOR	CONDENSATORE	CONDENSATEUR	KONDENSATOR
18	651156 00	651156 00	1SR GEAR & PINION	INGRANAGGIO IN FIBRA	ENGRANAGE EN CELERON	1 GETRIEBERAND & RITZEL
19	03001408 24	03001408 24	TRUST WASHER (9 R.QD)	RONDELLA DI RASAMENTO (9 PZ)	RONDELLE (9 PCS)	UNTERLEG SCHEIBE (9 STK.)
20	651157 00	651157 00	2ND GEAR & PINION	INGRANAGGIO INTERMEDIO	2eme ENGRANAGE ET PIGNON	2 GETRIEBERAND & RITZEL
21	651159 00	651159 00	OUTPUT SHAFT	ALBERO DI TRASMISSIONE	ARBRE DE SORTIE	AUSGANGSSHAFT
22	03001364 00	03001364 00	KEY	CHIAVETTA	CLAVETTE	KEIL
23	02001681 00	02001681 00	TRUST WASHER	RONDELLA DI RASAMENTO	RONDELLE	SCHEIBE
24	03001363 00	03001363 00	CLIP RING	ANELLO SEEGER	CIRCLIP	RING
25	651158 00	651158 00	OUTPUT GEAR	INGRANAGGIO FINALE	3eme ENGRANAGE	GETRIEBERAND
26	02001680 00	02001680 00	ROLLER BEARING	CUSCINETTO A RULLINI	ROULEMENT	OBERLAGE
27	02001679 00	02001679 00	TRUST WASHER	RONDELLA DI RASAMENTO	RONDELLE	SCHEIBE
28	02001607 01	02001607 01	GREASE SEAL - FACE DOWN	PARAOLIO	PARAHUILE	SCHMIERDICHTUNG
29	02002853 01	02002853 01	GREASE SEAL - FACE UP	PARAOLIO	PARAHUILE	SCHMIERDICHTUNG
30	13000709 02	13000709 02	GASKET	GUARNIZIONE	JOINT	DICHTUNG
31	400078 00	400078 00	SCREW	VITE	VIS	SCHAUBE
32	03001403 77	03001403 77	SCREW	VITE	VIS	SCHAUBE
33	650515 01	650515 01	PLASTIC HOUSING	ALLOGGIAMENTO IN PLASTICA	BôITE DETECTEUR EFF. HALL	KUNSTSTOFFGEHAUSE
34	660755 00	660755 00	DRIP TRAY	RACCOGLIGOCCE	GOUPELLE EAU	TROPFPFANNE
35	060359 01	060359 01	COUPLING KIT	GIUNTO KIT	BAGUE D'ACCOUPLEMENT CPL KIT	KUPPLUNG KIT
36	764007 00	764007 00	ALUMINIUM ADAPTER	SUPPORTO DI ALLUMINIO	SUPPORT	PASSTUECK
37	420019 00	420019 00	SCREW	VITE	VIS	SCHRAUBE
38	440015 04	440015 04	WASHER	RONDELLA	RONDELLE	SCHEIBE
39	784459 00	784456 00	WORM TUBE ONLY	TUBO EVAPORATORE	CYLINDRE EVAPORATEUR	GEFRIERZYLINDER
40	724198 02	724198 03	AUGER	COCLEA	VIS SANS FIN	SCHNECKE
41	650402 00	650402 00	WATER SEAL	ASSIEME PREMISTOPPA	GARNITURE D'ETANCHEITE	WASSERDICHTUNGEINHEIT
42	640093 00	640093 00	O RING	GUARNIZIONE OR	JOINT TORIQUE	O RING
43-44	060527 00	060527 00	BEARING + RETAINER KIT	ASSIEME SUPPORTO CUSCINETTO	LOGEMENT PALIER	UNTERESLAGERGEHAUSE KIT
45	751005 01	751005 01	ICE BREAKER ONLY	ROMPIGHIACCIO	BROYEUR	EISBRECHER
46	263612 00	263612 00	WATER PROOF GREASE	GRASSO IDROREPELL.	GRAISSE	FETT
47	640093 02	640093 02	O RING	GUARNIZIONE OR	JOINT TORIQUE	O RING
48	640093 03	640093 03	O RING	GUARNIZIONE OR	JOINT TORIQUE	O RING
49	651058 00	651058 00	TOP BEARING	CUSCINETTO SUPERIORE	PALIER SUPERIEUR	OBERESLAGER
50	423915 00	423915 00	SCREW	VITE	VIS	SCHAUBE
51	660507 00	660507 00	PLASTIC CUP	CALOTTA IN PLASTICA	CALOTTE	KUGELHAUBE
52	420019 00	420019 00	SCREW	VITE	VIS	SCHAUBE
53	440015 04	440015 04	WASHER	RONDELLA	RONDELLE	SCHEIBE
54-55-56	784476 01	784476 01	MAGNETO ASSY	ASS. SUPPORTO MAGNETE	ENS.SUPPORT DU MAGNETO	MAGNETHALTER CPL

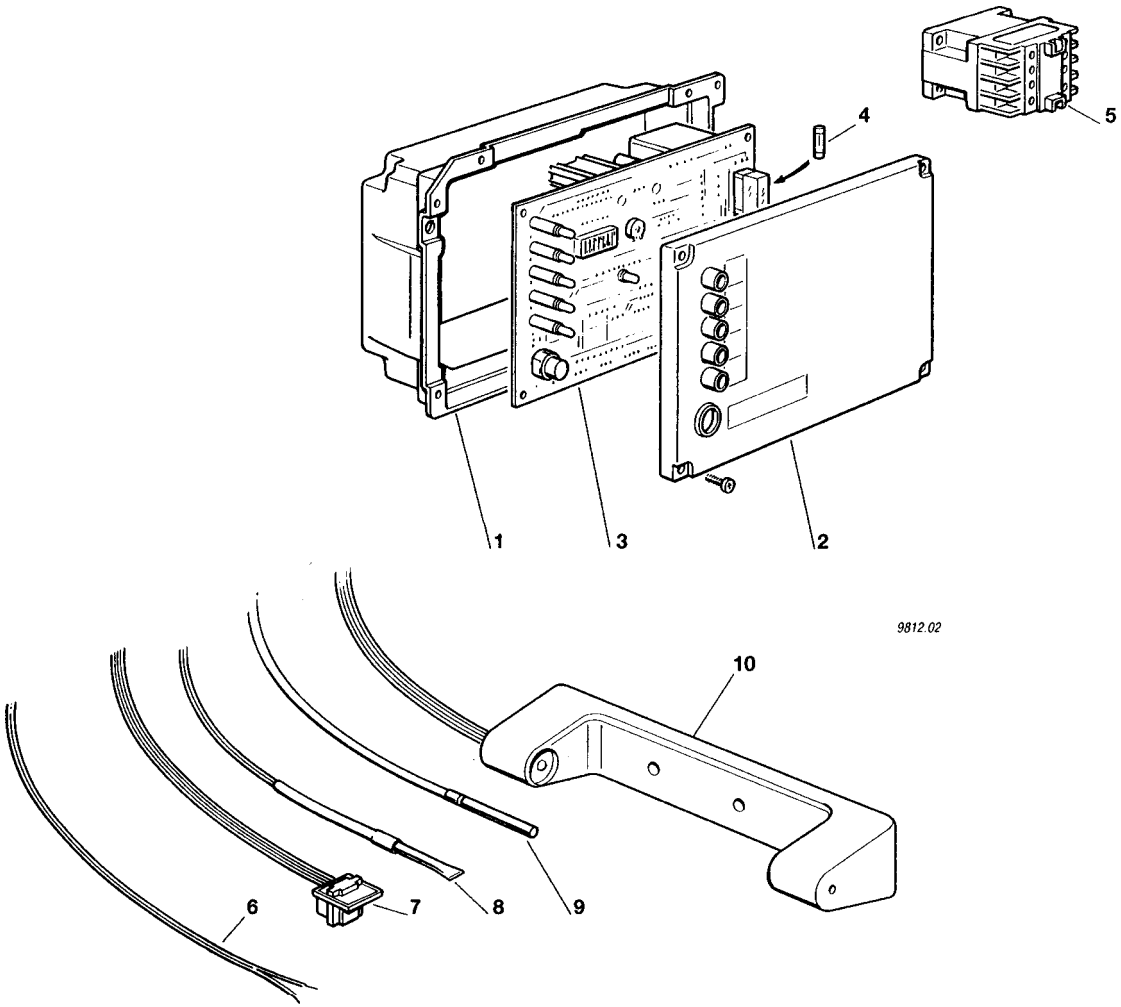
1
2
3
4
5
6
7
8
9
10
9812.02

SP 405 - SP 605 - P.C. BOARD AND SENSOR ASSY - SCHEDA ELETTRONICA E SENSORI
ENS. CARTE ELECTRINIQUE ET DETECTEURS - ELEKTRONISCHE KARTE UND TEMPERATURFUEHLERENHEIT

ITEM NO POS NO REP. NO REF. NO	PART NO CODICE REFERENCE STUECK NR	DESCRIPTION	DESCRIZIONE	DESIGNATION	BESCHREIBUNG
1-2-3	620462 02 .	P.C. BOARD ASSY	ASSIEME SCHEDA ELETTRONICA	ENSAMBLE CARTE ELECTRONIQUE	GEDRUCKTESCHALTUNG
4	630015 09 630015 10	FUSE (100 mA) FUSE (16 A)	FUSIBILE (100 mA) FUSIBILE (16 A)	FUSIBLE (100 mA) FUSIBLE (16 A)	SCHMELZSICHERUNG (100 mA) SCHMELZSICHERUNG (16 A)
5	630119 00 630124 05	CONTACTOR SP 405 CONTACTOR SP 605	TELERUTTORE SP 405 TELERUTTORE SP 605	CONTACTEUR SP 405 CONTACTEUR SP 605	SCHALTSCHÜTZ SP 405 SCHALTSCHÜTZ SP 605
6	620404 13	WATER LEVEL SENSOR	SENSORE LIVELLO ACQUA	CAPTEUR NIVEAU EAU	WASSERNIVEAUFÜHLER
7	620404 03	HALL EFFECT SENSOR	SENSORE EFFETTO HALL	CAPTEUR EFFECT HALL	HALL EFFEKT-FÜHLER
8	620404 11	CONDENSER TEMP. SENSOR	SENSORE TEMP. CONDENSATORE	CAPTEUR TEMP. CONDENSEUR	KONDENSATORTEMPERATURFUEHLER
9	620404 10	EVAPORATOR TEMP. SENSOR	SENSORE TEMP. EVAPORATORE	CAPTEUR TEMP. ÉVAPORATEUR	VERDAMPFERTEMPERATURFUEHLER
10	650674 02	ICE LEVEL CONTROL ASSY	ASS. CONTR. LIVELLO GHIACCIO	ENS. DETECTEUR NIVEAU GLACE	EISNIVEAUFUEHLEREINHEIT

COMPRESSOR CHART - TABELLA COMPRESSORI - TABLEAU COMPRESSEUR - KOMPRESSOR KARTE

MODEL MODELLO MODELE MODELL	VOLTS TENSIONE TENSION SPANNUNG	COMPRESSOR MODEL MOD. COMPRESSORE TYPE COMPRESSEUR KOMPRESSOR TYP	COMPRESSOR COMPRESSORE COMPRESSEUR KOMPRESSOR	RELAY RELÉ RELAIS RELAIS	PROTECTOR PROTETTORE PROTECTEUR SCHUTZGERAT	START CAPACITOR CAPACITA D'AVV. CAPACITÉ DE DEMARRAGE START KONDENSATOR	RUN CAPACITOR CAPACITA DI MARCIA CAPACITÉ PERMANENCE BETRIEB KONDENSATOR
SP 405 SP 605	230/60/1 230/60/1	U.H. CAJ 9510 Z U.H. CAJ 4519 Z	670099 09 670099 13	620057 50 620057 54	620058 81 620058 85	620167 00 620167 00	620167 21 620167 54
SP 405 SP 605	230/50/1 230/50/1	U.H. CAJ 9510 Z U.H. CAJ 4519 Z	670099 04 670099 05	620057 46 620057 47	620058 78 620058 57	620167 00 620167 00	620167 21 620167 54
SP 605	400/50/3	U.H. TAJ 4519 Z	670099 06	*****	620058 58	*****	*****

ELECTRIC COMPONENTS CHART - TABELLA COMPONENTI ELETTRICI - TABLEAU COMPOSANTS ELECTRIQUE - ELEKTRISCHEKARTE

MODEL MODELLO MODELE MODELL	VOLTS TENSIONE TENSION SPANNUNG	CONTACTOR TELERUTTORE CONTACTEUR SCHALTSCHÜTZ	GEAR MOTOR ASSY ASS. MOTORIDUTTORE ENS. MOTOREDUCTEUR GETRIEBEMOTOREINHEIT	DRIVE MOTOR MOTORE RIDUTTORE MOTEUR REDUCTEUR MOTOREINHEIT	FAN MOTOR ONLY MOTORE VENTILATORE MOTEUR VENTILATEUR LUFTER MOTOR	DRIVE MOTOR CAPACITOR CAPACITA' MOTORE RIDUTT. CONDENSAT.MOTEUR REDUCT. KONDENSATOR	P.C. BOARD SCHEDA ELETTRONICA CARTE ELECTRONIQUE ELEKTRONISCHE KARTE		STATOR STATORE STATOR STATOR
SP 405 SP 605	230/60/1 230/60/1	630119 00 620124 05	794215 08 R 794215 08 R	060273 06 060273 06	620419 04 620419 07	620292 03 620292 03	620462 02 620462 02		620295 00 620295 00
SP 405 SP 605	230/50/1 230/50/1	630119 00 620124 05	794215 08 R 794215 08 R	060273 06 060273 06	620419 04 620419 07	620292 03 620292 03	620462 02 620462 02		620295 00 620295 00
SP 605	400/50/3	620124 05	794215 08 R	060273 06	620419 07	620292 03	620462 02		620295 00

SIMAG
ICE MACHINES

www.simag.it

SIMAG
via Risorgimento, 4
20017 Mazzo di Rho (MI) - Italy
Tel. +39 02 93900215 (Commerciale - Sales Dept.)
Tel. +39 02 93960357 (Assistenza - Service Dept.)
Fax +39 02 93900226 (Commerciale - Sales Dept.)
Fax +39 02 93960366 (Assistenza - Service Dept.)
e-mail: sales@simag.it
e-mail: service@simag.it

Singapore Office
SIMAG FAR EAST
627A Aljunied Road
04-04 Biztech Centre
Singapore 389842
Tel. ++65 6738 5393
Fax ++65 6738 1959
e-mail: scotsice@singnet.com.sg

Certified ISO 9001
TOTAL QUALITY