DESPIECE TECNICO

# Lavadoras
# Lava-linge
# Washing machines
# Waschmaschine
# Lavatrici
# Máquinas de lavar roupa

## Modelos:

**LR-18 M**
**LA-18 M**
**LR-25 M**
**LA-25 M**

***Noviembre 2010 November***
***Revisado Enero 2014 January Revised***

FAGOR

FAGOR INDUSTRIAL

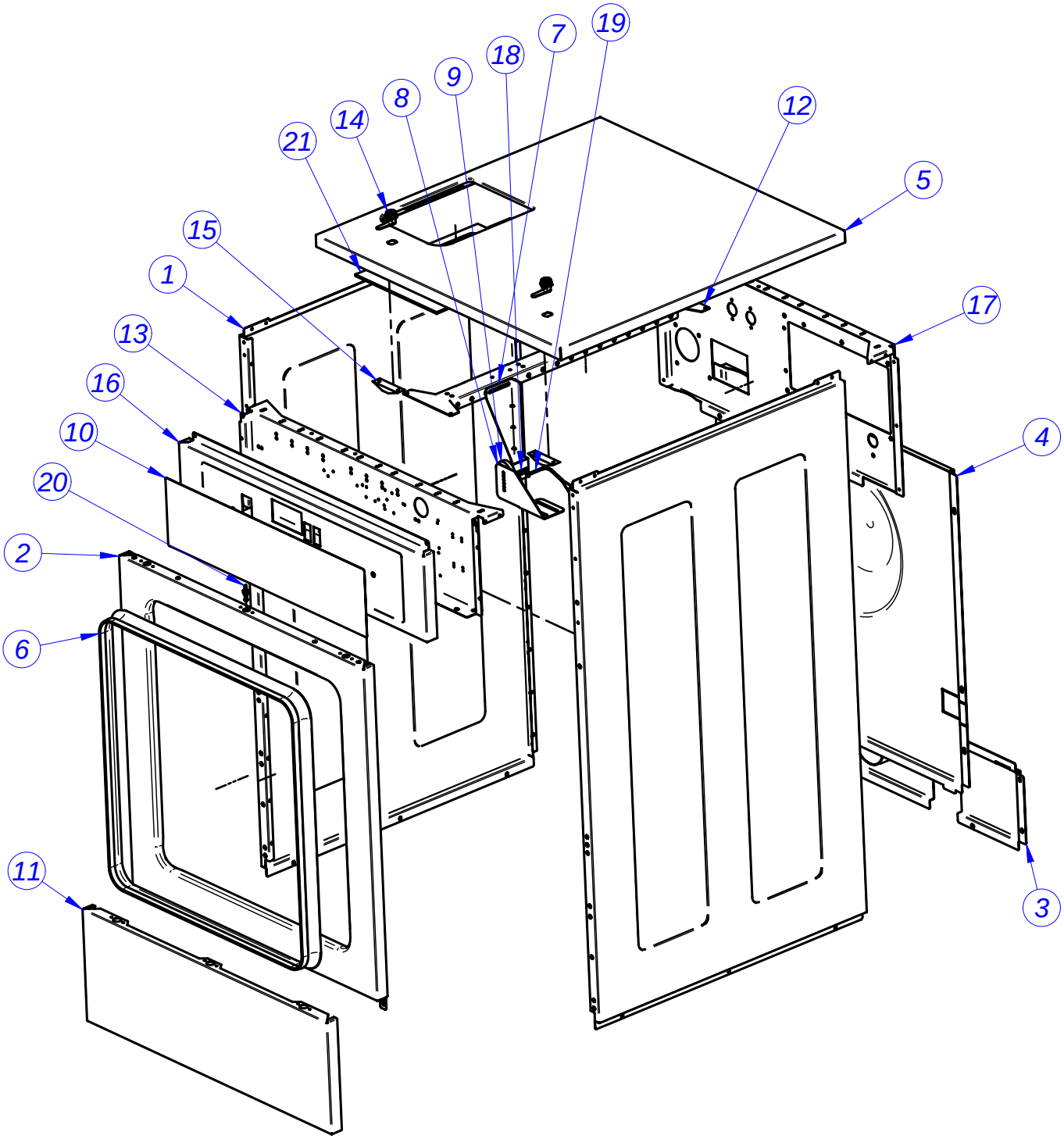


MUEBLE / CABINET

| MUEBLE / CABINET | | | | | | | | | | | | | | | | | | ELIMINADO ELIMINATED | INTRODUCIDO INTRODUCED |
|---|---|---|---|---|---|---|---|---|---|---|---|---|---|---|---|---|---|---|---|
| ITEM | DENOMINACION | NAME | CODIGO | LR-18 | | | LA-18 | | | LR-25 | | | LA-25 | | | | | | |
| | | | | MP | M | MA | MP | M | MA | MP | M | MA | MP | M | MA | | | | |
| 1 | PANEL LATERAL | SIDE PANEL | P634024000 | 2 | 2 | 2 | | | | | | | | | | | | | |
| | | | P630352000 | | | | 2 | 2 | 2 | | | | | | | | | | |
| | | | P644035000 | | | | | | | 2 | 2 | 2 | | | | | | | |
| | | | P640330000 | | | | | | | | | | 2 | 2 | 2 | | | | |
| 2 | PANEL FRONTAL | FRONT PANEL | P627808000 | 1 | 1 | 1 | | | | | | | | | | | | | |
| | | | P637803000 | | | | 1 | 1 | 1 | 1 | 1 | 1 | | | | | | | |
| | | | P647804000 | | | | | | | | | | 1 | 1 | 1 | | | | |
| S/Nº | CIERRE MUELLE | LOCK SPRING | X010503000 | 1 | 1 | 1 | 1 | 1 | 1 | 1 | 1 | 1 | 1 | 1 | 1 | | | | |
| 3 | PANEL POSTERIOR DESAGUE | DRAINAGE REAR PANEL | P620306000 | 1 | 1 | 1 | | | | | | | | | | | | 01,12,13 | |
| | | | 12044189 | 1 | 1 | 1 | | | | | | | | | | | | | 01,12,13 |
| | | | P630307000 | | | | 1 | 1 | 1 | | | | | | | | | 01,12,13 | |
| | | | P644032000 | | | | | | | 1 | 1 | 1 | | | | | | 01,12,13 | |
| | | | 12044192 | | | | 1 | 1 | 1 | 1 | 1 | 1 | | | | | | | 01,12,13 |
| | | | P640305000 | | | | | | | | | | 1 | 1 | 1 | | | 01,12,13 | |
| | | | 12044190 | | | | | | | | | | 1 | 1 | 1 | | | | 01,12,13 |
| 4 | PANEL POSTERIOR | REAR PANEL | P620382000 | 1 | 1 | 1 | | | | | | | | | | | | | |
| | | | P630360000 | | | | 1 | 1 | 1 | 1 | 1 | 1 | | | | | | | |
| | | | P640337000 | | | | | | | | | | 1 | 1 | 1 | | | | |
| 5 | ENCIMERA | WORKTOP | P634026000 | 1 | 1 | 1 | | | | | | | | | | | | 12,03,12 | |
| | | | 12044483 | 1 | 1 | 1 | | | | | | | | | | | | | 12,03,12 |
| | | | P630358000 | | | | 1 | 1 | 1 | | | | | | | | | 12,03,12 | |
| | | | 12044482 | | | | 1 | 1 | 1 | | | | | | | | | | 12,03,12 |
| | | | P644036000 | | | | | | | 1 | 1 | 1 | | | | | | 12,03,12 | |
| | | | 12044486 | | | | | | | 1 | 1 | 1 | | | | | | | 12,03,12 |
| | | | P640335000 | | | | | | | | | | 1 | 1 | 1 | | | 12,03,12 | |
| | | | 12044485 | | | | | | | | | | 1 | 1 | 1 | | | | 12,03,12 |
| S/Nº | CANTONERA R1 | R1 CORNER | 12039188 | 2 | 2 | 2 | 2 | 2 | 2 | | | | | | | | | | |
| 6 | CORTINA (METROS) | CURTAIN (METRES) | P620324000 | 2,5 | 2,5 | 2,5 | 2,5 | 2,5 | 2,5 | 2,5 | 2,5 | 2,5 | 2,5 | 2,5 | 2,5 | | | | |
| 7 | PORTA SENSOR DESEQ. | IMBALANCE SENSOR HOLDER | P630315000 | | | | 1 | 1 | 1 | | | | 1 | 1 | 1 | | | | |
| 8 | SOPORTE IMAN DESEQ. | IMBALANCE MAGNET HOLDER | P627063000 | | | | 1 | 1 | 1 | | | | 1 | 1 | 1 | | | | |
| 9 | IMAN DESEQUILIBRIO | IMBALANCE MAGNET HOLDER | P620337000 | | | | 1 | 1 | 1 | | | | 1 | 1 | 1 | | | | |
| 10 | ADHESIVO | ADHESIVE | 12007721 | 1 | | | 1 | | | 1 | | | 1 | | | | | | |
| | | | 12007722 | | 1 | | | 1 | | | 1 | | | 1 | | | | | |
| | | | 12007719 | | | 1 | | | 1 | | | 1 | | | 1 | | | | |
| 11 | ZOCALO | SKIRTING | P627807000 | 1 | 1 | 1 | | | | | | | | | | | | | |
| | | | P637802000 | | | | 1 | 1 | 1 | 1 | 1 | 1 | | | | | | | |
| | | | P647803000 | | | | | | | | | | 1 | 1 | 1 | | | | |
| | KIT ZOCALO 18 | ZOCALO KIT 18 | 1300000197 | | | | | | | | | | | | | | | | |
| | KIT ZOCALO 25 | ZOCALO KIT 25 | 1300000198 | | | | | | | | | | | | | | | | |
| | | | | | | | | | | | | | | | | | | | |

| MUEBLE / CABINET | | | | | | | | | | | | | | | | | | ELIMINADO ELIMINATED | INTRODUCIDO INTRODUCED |
|---|---|---|---|---|---|---|---|---|---|---|---|---|---|---|---|---|---|---|---|
| ITEM | DENOMINACION | NAME | CODIGO | LR-18 | | | LA-18 | | | LR-25 | | | LA-25 | | | | | | |
| | | | | MP | M | MA | MP | M | MA | MP | M | MA | MP | M | MA | | | | |
| 12 | TRAVESAÑO CUBETERA | TRAY CROSS PIECE | P634025000 | 2 | 2 | 2 | | | | | | | 2 | 2 | 2 | | | | |
| | | | P630357000 | | | | 2 | 2 | 2 | | | | | | | | | | |
| | | | P644037000 | | | | | | | 2 | 2 | 2 | | | | | | | |
| 13 | CONTRAPORTAMANDOS | COUNTERCONTROL HOLDER | P620373000 | 1 | 1 | | | | | | | | | | | | | | |
| | | | P620381000 | | | 1 | | | | | | | | | | | | | |
| | | | P630353000 | | | | 1 | 1 | | 1 | 1 | | | | | | | | |
| | | | P630359000 | | | | | | 1 | | | 1 | | | | | | | |
| | | | P640331000 | | | | | | | | | | 1 | 1 | | | | | |
| | | | P640336000 | | | | | | | | | | | | 1 | | | | |
| 14 | CERRADURA | LOCK | P620351000 | 2 | 2 | | 2 | 2 | | 2 | 2 | | 2 | 2 | | | | | |
| | | | P620387000 | | | 2 | | | 2 | | | 2 | | | 2 | | | | |
| 15 | RAMPA CIERRE ENCIMERA | WORKTOP LOCK RAMP | P620379000 | 2 | 2 | 2 | 2 | 2 | 2 | 2 | 2 | 2 | 2 | 2 | 2 | | | | |
| 16 | PORTAMANDOS | CONTROL HOLDER | P620374000 | 1 | 1 | | | | | | | | | | | | | | |
| | | | P620380000 | | | 1 | | | | | | | | | | | | | |
| | | | P630354000 | | | | 1 | 1 | | 1 | 1 | | | | | | | | |
| | | | P630355000 | | | | | | 1 | | | 1 | | | | | | | |
| | | | P640332000 | | | | | | | | | | 1 | 1 | | | | | |
| | | | P640333000 | | | | | | | | | | | | 1 | | | | |
| S/Nº | TAPON PUERTO SERIE PROG. | PORT PLUG | 12023349 | 1 | | | 1 | | | 1 | | | 1 | | | | | | |
| S/Nº | INTERRUPTOR DE SETA ROJO | RED MUSHROOM SWITCH | Z513005000 | | | | | | | 1 | 1 | 1 | 1 | 1 | 1 | | | | |
| 17 | SOPORTE ELECTROVALVULAS | SOLENOID VALVE SUPPORT | P620372000 | 1 | 1 | 1 | | | | | | | | | | | | | |
| | | | P630356000 | | | | 1 | 1 | 1 | 1 | 1 | 1 | | | | | | | |
| | | | P640334000 | | | | | | | | | | 1 | 1 | 1 | | | | |
| 18 | AMARRRE SENSOR DESEQUILIB. | IMBALANCE SENSOR FASTENIN. | Z203010000 | | | | 1 | 1 | 1 | | | | 1 | 1 | 1 | | | | |
| 19 | SENSOR DESEQUILIBRIO | SENSOR IMBALANCE | Z203009000 | | | | 1 | 1 | 1 | | | | 1 | 1 | 1 | | | | |
| 20 | PITON | PITON | X012612000 | 10 | 10 | 10 | 10 | 10 | 10 | 10 | 10 | 10 | 10 | 10 | 10 | | | | |
| 21 | JUNTA CUBETA | TRAY SEAL | P610360000 | 1 | 1 | 1 | 1 | 1 | 1 | 1 | 1 | 1 | 1 | 1 | 1 | | | | |
| | | | | | | | | | | | | | | | | | | | |
| | | | | | | | | | | | | | | | | | | | |
| | | | | | | | | | | | | | | | | | | | |
| | | | | | | | | | | | | | | | | | | | |
| | | | | | | | | | | | | | | | | | | | |
| | | | | | | | | | | | | | | | | | | | |
| | | | | | | | | | | | | | | | | | | | |
| | | | | | | | | | | | | | | | | | | | |
| | | | | | | | | | | | | | | | | | | | |
| | | | | | | | | | | | | | | | | | | | |
| | | | | | | | | | | | | | | | | | | | |
| | | | | | | | | | | | | | | | | | | | |

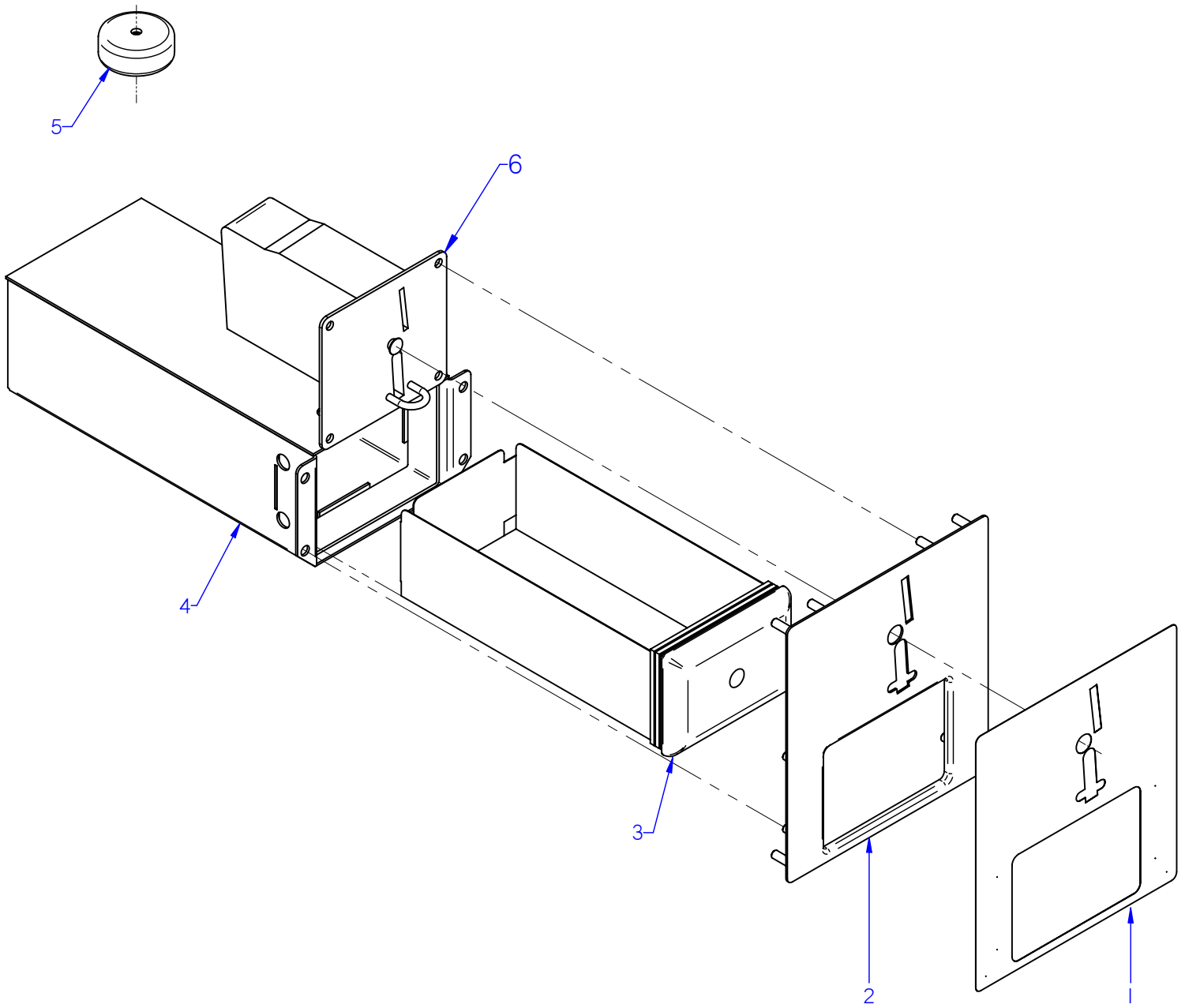


KIT MONEDERO

| KIT MONEDERO / COIN SLOT KIT | | | | | | | | | | | | | | | | | | | |
|---|---|---|---|---|---|---|---|---|---|---|---|---|---|---|---|---|---|---|---|
| ITEM | DENOMINACION | NAME | CODIGO | LR-18 | | | LA-18 | | | LR-25 | | | LA-25 | | | ELIMINADO ELIMINATED | INTRODUCIDO INTRODUCED |
| | | | | MP | M | MA | MP | M | MA | MP | M | MA | MP | M | MA | | |
| 1 | ADHESIVO MONEDERO FAGOR | COIN SLOT ADHESIVE FAGOR | P623041000 | | | 1 | | | 1 | | | 1 | | | 1 | | |
| 2 | CHAPA MONEDERO COMPL. | COIN SLOT PLATE COMPL. | 12003367 | | | 1 | | | 1 | | | 1 | | | 1 | | |
| S/Nº | TAPA MONEDERO COMPLETA FABR. | COIN SLOT PLATE TOP COMPL. | 12095213 | | | 1 | | | 1 | | | 1 | | | 1 | | |
| 3 | CAJON MONEDAS | COIN DRAWER | P610407000 | | | 1 | | | 1 | | | 1 | | | 1 | | |
| 4 | PORTA CAJA MONEDAS COMPL. | COIN BOX HOLDER COMPL. | P614011000 | | | 1 | | | 1 | | | 1 | | | 1 | | |
| 5 | TRANSFORMADOR MONEDERO | COIN SLOT TRANSFORMER | P624014000 | | | 1 | | | 1 | | | 1 | | | 1 | | |
| 6 | MONEDERO WH (EUR-GBP) | COIN SLOT WH (EUR-GBP) | 12023342 | | | 1 | | | 1 | | | 1 | | | 1 | | |
| 6 | MONEDERO WH (ARS-CLP-BRL) | COIN SLOT WH (ARS-CLP-BRL) | 12044494 | | | 1 | | | 1 | | | 1 | | | 1 | | |
| 6 | MONEDERO WH (AUD-NZD-JPY) | COIN SLOT WH (AUD-NZD-JPY) | 12044490 | | | 1 | | | 1 | | | 1 | | | 1 | | |
| 6 | MONEDERO WH (CNY-TWD-HKD) | COIN SLOT WH (CNY-TWD-HKD) | 12044488 | | | 1 | | | 1 | | | 1 | | | 1 | | |
| 6 | MONEDERO WH (MAD-DZD-TND) | COIN SLOT WH (MAD-DZD-TND) | 12044496 | | | 1 | | | 1 | | | 1 | | | 1 | | |
| 6 | MONEDERO WH (MYR-SGD-IDR) | COIN SLOT WH (MYR-SGD-IDR) | 12044489 | | | 1 | | | 1 | | | 1 | | | 1 | | |
| 6 | MONEDERO WH (RUB-ROB-CZK) | COIN SLOT WH (RUB-ROB-CZK) | 12044492 | | | 1 | | | 1 | | | 1 | | | 1 | | |
| 6 | MONEDERO WH (TRY-PLN) | COIN SLOT WH (TRY-PLN) | 12044491 | | | 1 | | | 1 | | | 1 | | | 1 | | |
| 6 | MONEDERO WH (USD-MXN-CAD) | COIN SLOT WH (USD-MXN-CAD) | 12044487 | | | 1 | | | 1 | | | 1 | | | 1 | | |
| 6 | MONEDERO WH (VEF-PEN-COP) | COIN SLOT WH (VEF-PEN-COP) | 12044493 | | | 1 | | | 1 | | | 1 | | | 1 | | |
| | | | | | | | | | | | | | | | | | |
| | FAGOR KIT MONEDERO EUR-GBP | FAGOR KIT COIN EUR-GBP | 19004589 | | | | | | | | | | | | | **23,01,13** | |
| | FAGOR KIT MONEDERO EUR-GBP | FAGOR KIT COIN 2013 EUR-GBP | 19012640 | **A PARTIR DEL Nº DE SERIE 810006036** | | | | | | | | | | | | | **23,01,13** |
| | FAGOR KIT MONEDE. ARS-CLP-BRL | FAGOR KIT COIN ARS-CLP-BRL | 19011106 | | | | | | | | | | | | | **23,01,13** | |
| | FAGOR KIT MONEDE. ARS-CLP-BRL | FAGOR KIT COIN 2013 ARS-CLP-BRL | 19012641 | **A PARTIR DEL Nº DE SERIE 810006036** | | | | | | | | | | | | | **23,01,13** |
| | FAGOR KIT MONEDE. AUD-NZD-JPY | FAGOR KIT COIN AUD-NZD-JPY | 19004592 | | | | | | | | | | | | | **23,01,13** | |
| | FAGOR KIT MONEDE. AUD-NZD-JPY | FAGOR KIT COIN 2013 AUD-NZD-JPY | 19012642 | **A PARTIR DEL Nº DE SERIE 810006036** | | | | | | | | | | | | | **23,01,13** |
| | FAGOR KIT MONED. CNY-TWD-HKD | FAGOR KIT COIN CNY-TWD-HKD | 19004591 | | | | | | | | | | | | | **23,01,13** | |
| | FAGOR KIT MONED. CNY-TWD-HKD | FAG. KIT COIN 2013 CNY-TWD-HKD | 19012643 | **A PARTIR DEL Nº DE SERIE 810006036** | | | | | | | | | | | | | **23,01,13** |
| | FAGOR KIT MONED. MAD-DZD-TND | FAGOR KIT COIN MAD-DZD-TND | 19011222 | | | | | | | | | | | | | **23,01,13** | |
| | FAGOR KIT MONED. MAD-DZD-TND | FAGOR KIT COIN 2013 MAD-DZD-TND | 19012644 | **A PARTIR DEL Nº DE SERIE 810006036** | | | | | | | | | | | | | **23,01,13** |
| | FAGOR KIT MONED. MYR-SGD-IDR | FAGOR KIT COIN MYR-SGD-IDR | 19011062 | | | | | | | | | | | | | **23,01,13** | |
| | FAGOR KIT MONED. MYR-SGD-IDR | FAGOR KIT COIN 2013 MYR-SGD-IDR | 19012645 | **A PARTIR DEL Nº DE SERIE 810006036** | | | | | | | | | | | | | **23,01,13** |
| | FAGOR KIT MONED. RUB-ROB-CZK | FAGOR KIT COIN RUB-ROB-CZK | 19011220 | | | | | | | | | | | | | **23,01,13** | |
| | FAGOR KIT MONED. RUB-ROB-CZK | FAGOR KIT COIN 2013 RUB-ROB-CZK | 19012646 | **A PARTIR DEL Nº DE SERIE 810006036** | | | | | | | | | | | | | **23,01,13** |
| | FAGOR KIT MONEDERO TRY-PLN | FAGOR KIT COIN TRY-PLN | 19011104 | | | | | | | | | | | | | **23,01,13** | |
| | FAGOR KIT MONEDERO TRY-PLN | FAGOR KIT COIN 2013 TRY-PLN | 19012647 | **A PARTIR DEL Nº DE SERIE 810006036** | | | | | | | | | | | | | **23,01,13** |
| | FAGOR KIT MONED. USD-MXN-CAD | FAGOR KIT COIN USD-MXN-CAD | 19004590 | | | | | | | | | | | | | **23,01,13** | |
| | FAGOR KIT MONED. USD-MXN-CAD | FAGOR KIT COIN 2013 USD-MXN-CAD | 19012648 | **A PARTIR DEL Nº DE SERIE 810006036** | | | | | | | | | | | | | **23,01,13** |
| | FAGOR KIT MONED. VEF-PEN-COP | FAGOR KIT COIN VEF-PEN-COP | 19011221 | | | | | | | | | | | | | **23,01,13** | |
| | FAGOR KIT MONED. VEF-PEN-COP | FAG. KIT COIN 2013 VEF-PEN-COP | 19012649 | **A PARTIR DEL Nº DE SERIE 810006036** | | | | | | | | | | | | | **23,01,13** |
| | | | | | | | | | | | | | | | | | |
| | | | | | | | | | | | | | | | | | |
| | | | | | | | | | | | | | | | | | |

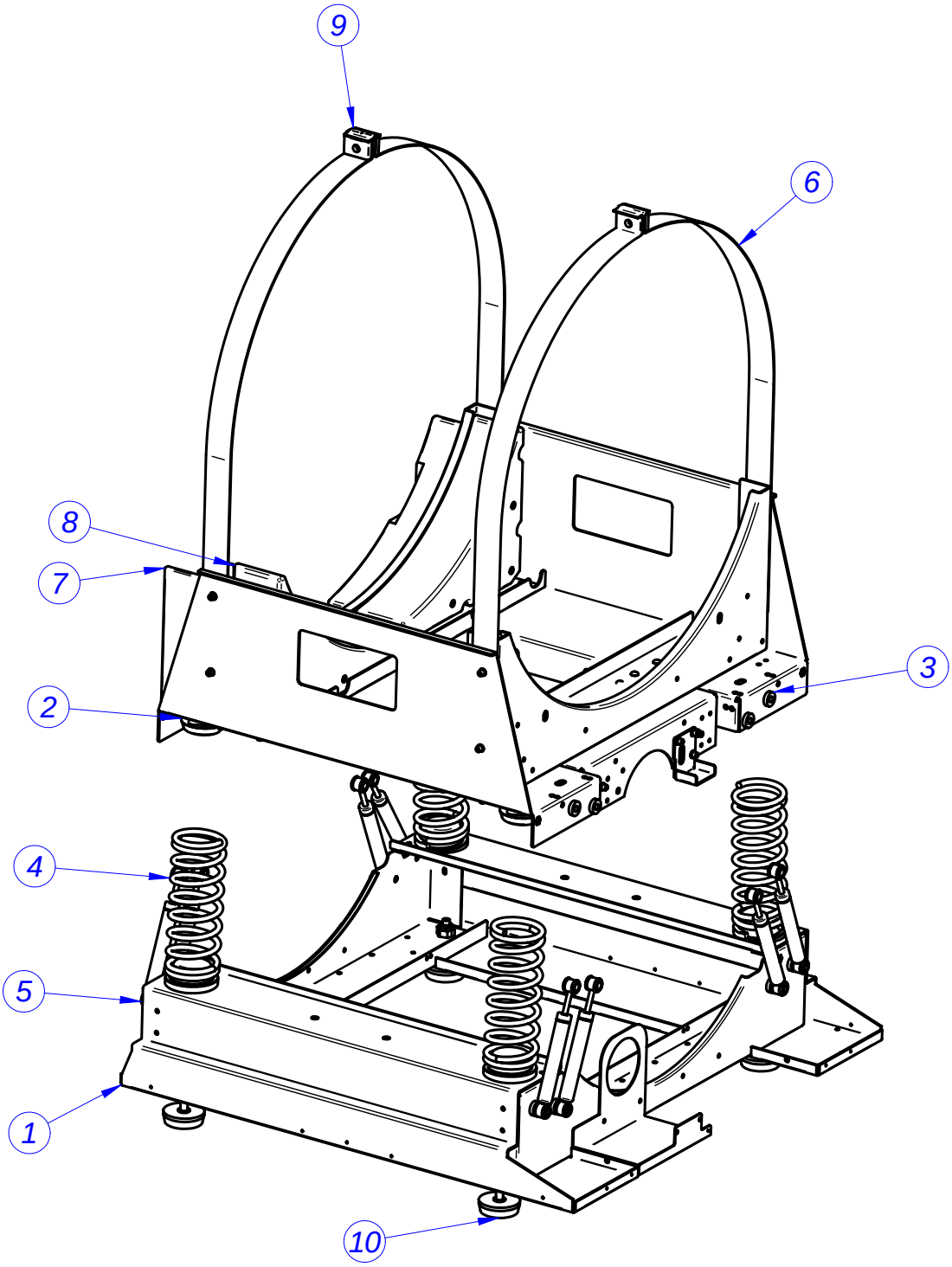
9
6
8
7
3
2
4
5
1
10

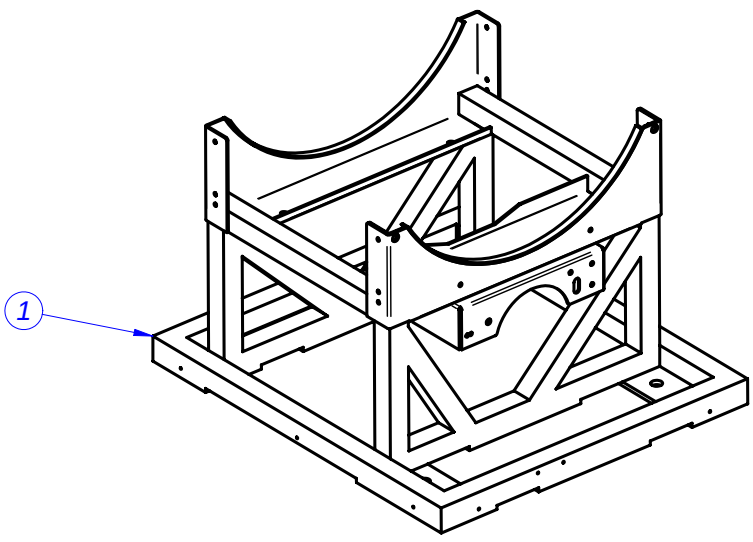
1

| CUNA - ARMAZON / CRADLE - FRAME | | | | | | | | | | | | | | | | | | ELIMINADO ELIMINATED | INTRODUCIDO INTRODUCED |
|---|---|---|---|---|---|---|---|---|---|---|---|---|---|---|---|---|---|---|---|
| ITEM | DENOMINACION | NAME | CODIGO | LR-18 | | | LA-18 | | | LR-25 | | | LA-25 | | | | | | |
| | | | | MP | M | MA | MP | M | MA | MP | M | MA | MP | M | MA | | | | |
| 1 | ARMAZON | FRAME | P634001000 | 1 | 1 | 1 | | | | | | | | | | 02,05,11 | |
| | | | P634031000 | 1 | 1 | 1 | | | | | | | | | | | 02,05,11 |
| | | | P630104000 | | | | 1 | 1 | 1 | | | | | | | | |
| | | | P644001000 | | | | | | | 1 | 1 | 1 | | | | 02,05,11 | |
| | | | P644042000 | | | | | | | 1 | 1 | 1 | | | | | 02,05,11 |
| | | | P640101000 | | | | | | | | | | 1 | 1 | 1 | | |
| 2 | BASE MUELLE | SPRING BASE | P620106000 | | | | 8 | 8 | 8 | | | | | | | 15.07.13 | |
| | | | 12023345 | | | | 8 | 8 | 8 | | | | 8 | 8 | 8 | | 15.07.13 |
| 3 | CASQUILLO AMORTIGUADOR | DAMPER BUSHING | P620107000 | | | | 16 | 16 | 16 | | | | 16 | 16 | 16 | | |
| 4 | MUELLE | SPRING | P630106000 | | | | 4 | 4 | 4 | | | | | | | | |
| | | | P640108000 | | | | | | | | | | 4 | 4 | 4 | | |
| 5 | AMORTIGUADOR | DAMPER | P620115000 | | | | 8 | 8 | 8 | | | | | | | | |
| | | | P630111000 | | | | | | | | | | 8 | 8 | 8 | | |
| 6 | CUNA | CRADLE | P630207000 | | | | 1 | 1 | 1 | | | | | | | | |
| | | | P640201000 | | | | | | | | | | 1 | 1 | 1 | | |
| 7 | CONTRAPESO ANTERIOR | FRONT COUNTERWEIGHT | P630212000 | | | | 2 | 2 | 2 | | | | | | | | |
| | | | P640205000 | | | | | | | | | | 2 | 2 | 2 | | |
| 8 | CONTRAPESO POSTERIOR | REAR COUNTERWEIGHT | P630208000 | | | | 2 | 2 | 2 | | | | | | | | |
| | | | P640208000 | | | | | | | | | | 2 | 2 | 2 | | |
| 9 | AMARRE ABRAZADERA | CLAMP FASTENING | P640215000 | 4 | 4 | 4 | 4 | 4 | 4 | 4 | 4 | 4 | 4 | 4 | 4 | | |
| 10 | PATA | LEG | P626521000 | | | | 4 | 4 | 4 | | | | 4 | 4 | 4 | | |

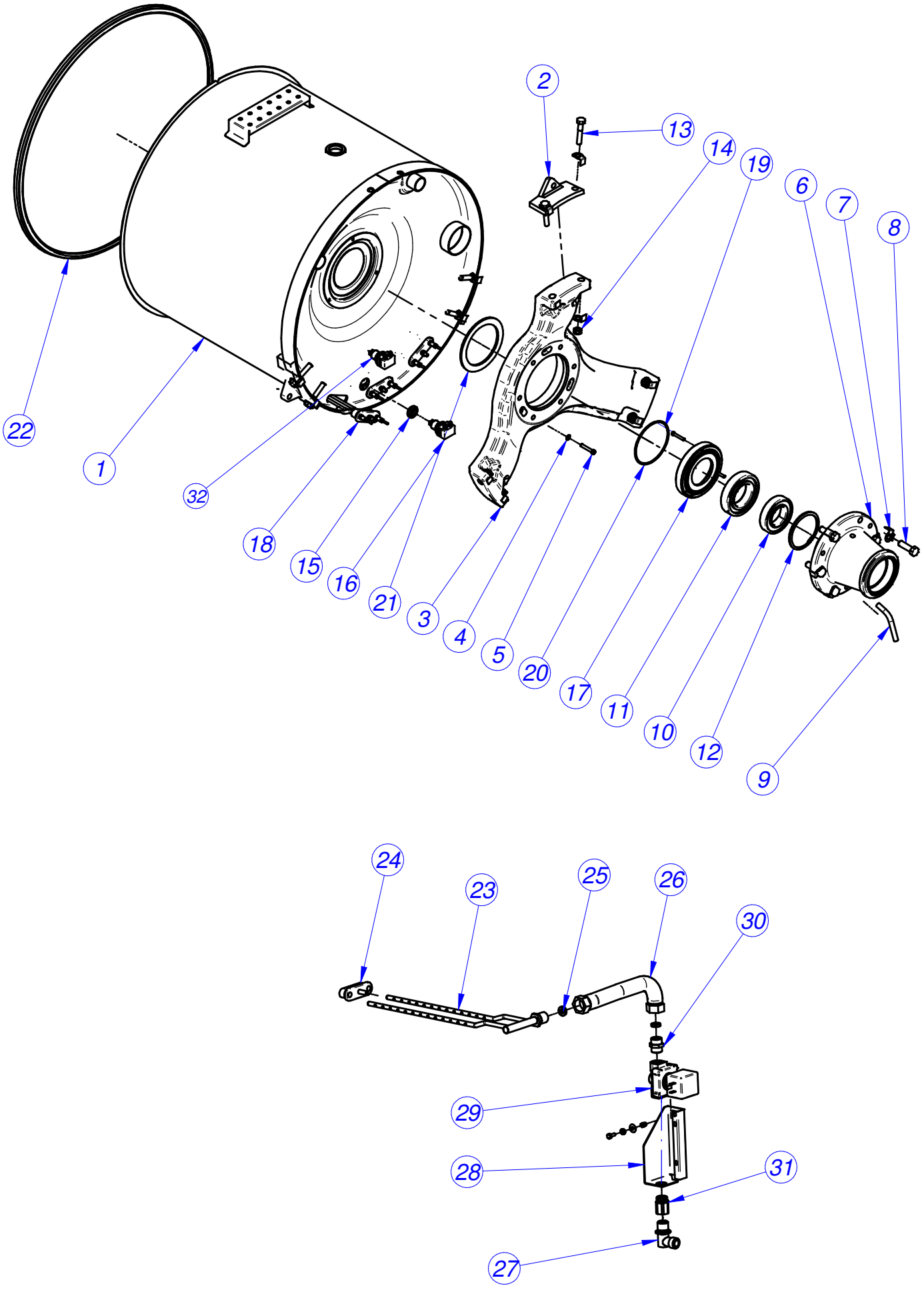
2
13
14
19
6
7
8
22
1
32
18
15
16
21
3
4
5
20
17
11
10
12
9
24
23
25
26
30
29
28
31
27

CUBA / TUB

| CUBA / TUB | | | | | | | | | | | | | | | | | | |
|---|---|---|---|---|---|---|---|---|---|---|---|---|---|---|---|---|---|---|
| ITEM | DENOMINACION | NAME | CODIGO | LR-18 | | | LA-18 | | | LR-25 | | | LA-25 | | | ELIMINADO ELIMINATED | INTRODUCIDO INTRODUCED |
| | | | | E | AC | V | E | AC | V | E | AC | V | E | AC | V | | |
| 1 | CUBA | TUB | P634012000 | 1 | 1 | 1 | | | | | | | | | | 01,12,10 | |
| | | | P634029000 | 1 | 1 | 1 | | | | | | | | | | 01,12,13 | 01,12,10 |
| | | | 12004061 | 1 | 1 | 1 | | | | | | | | | | | 01,12,13 |
| | | | P636107000 | | | | 1 | 1 | 1 | | | | | | | 01,12,13 | |
| | | | 12004046 | | | | 1 | 1 | 1 | | | | | | | | 01,12,13 |
| | | | 12004084 | | | | | | | 1 | 1 | 1 | | | | 01,12,10 | |
| | | | 12004085 | | | | | | | 1 | 1 | 1 | | | | | 01,12,10 |
| | | | P646105000 | | | | | | | | | | 1 | 1 | 1 | 01,12,13 | |
| | | | 12004067 | | | | | | | | | | 1 | 1 | 1 | | 01,12,13 |
| S/Nº | TAPÓN DESAGÜE | DRAIN PLUG | T305052000 | 1 | 1 | 1 | 1 | 1 | 1 | 1 | 1 | 1 | 1 | 1 | 1 | | |
| 2 | APOYO TORNILLOS | SCREW SUPPORT | P626014000 | 1 | 1 | 1 | | | | | | | | | | | |
| | | | P636009000 | | | | 1 | 1 | 1 | 1 | 1 | 1 | | | | | |
| | | | P646012000 | | | | | | | | | | 1 | 1 | 1 | | |
| 3 | REFUERZO FONDO CUBA | TUB BASE REINFORCEMENT | P626001000 | 1 | 1 | 1 | | | | | | | | | | | |
| | | | P636001000 | | | | 1 | 1 | 1 | 1 | 1 | 1 | | | | | |
| | | | P646014000 | | | | | | | | | | 1 | 1 | 1 | | |
| 4 | ARANDELA | WASHER | Q232040000 | 3 | 3 | 3 | 3 | 3 | 3 | 3 | 3 | 3 | 5 | 5 | 5 | | |
| 5 | TORN. INTERIOR REFUERZO | HEXAGONAL INTERIOR REINFOR | Q122045000 | 3 | 3 | 3 | 3 | 3 | 3 | 3 | 3 | 3 | 5 | 5 | 5 | | |
| 6 | SOPORTE RODAMIENTOS | BEARING SUPPORT | P626002000 | 1 | 1 | 1 | | | | | | | | | | 15,10,13 | |
| | | | 12095451 | 1 | 1 | 1 | | | | | | | | | | | 15,10,13 |
| | | | P636002000 | | | | 1 | 1 | 1 | 1 | 1 | 1 | | | | 15,10,13 | |
| | | | 12095452 | | | | 1 | 1 | 1 | 1 | 1 | 1 | | | | | 15,10,13 |
| | | | P646015000 | | | | | | | | | | 1 | 1 | 1 | 15,10,13 | |
| | | | 12095453 | | | | | | | | | | 1 | 1 | 1 | | 15,10,13 |
| 9 | TUBO EVACUACION | DRAINAGE PIPE | P626015000 | 1 | 1 | 1 | 1 | 1 | 1 | 1 | 1 | 1 | 1 | 1 | 1 | | |
| 10 | RODAMIENTO EXTERIOR | OUTER BEARING | P626008000 | 1 | 1 | 1 | | | | | | | | | | | |
| | | | P626009000 | | | | 1 | 1 | 1 | 1 | 1 | 1 | | | | | |
| | | | P644904000 | | | | | | | | | | 1 | 1 | 1 | | |
| 11 | RODAMIENTO INTERIOR | INNER BEARING | P626009000 | 1 | 1 | 1 | | | | | | | | | | | |
| | | | P636008000 | | | | 1 | 1 | 1 | 1 | 1 | 1 | | | | | |
| | | | P644903000 | | | | | | | | | | 2 | 2 | 2 | | |
| 12 | ANILLO SEGURIDAD | CIRCLIP | Q301030000 | 1 | 1 | 1 | | | | | | | | | | | |
| | | | Q301036000 | | | | 1 | 1 | 1 | 1 | 1 | 1 | | | | | |
| | | | Q301045000 | | | | | | | | | | 1 | 1 | 1 | | |
| 13 | TORN. REFUERZO CUBA | TUB REINFORCEMENT SCREW | Q151530000 | 6 | 6 | 6 | | | | | | | | | | | |
| | | | Q151535000 | | | | 6 | 6 | 6 | 6 | 6 | 6 | | | | | |
| | | | Q151590000 | | | | | | | | | | 10 | 10 | 10 | | |
| 14 | TUERCA REFUERZO CUBA | TUB REINFORCEMENT NUT | Q221338000 | 6 | 6 | 6 | 6 | 6 | 6 | 6 | 6 | 6 | | | | | |
| | | | Q221347000 | | | | | | | | | | 10 | 10 | 10 | | |
| 15 | SOP.TERMOSTATO 1001713 | THERMOSTAT SUPPORT 1001713 | N503017000 | 1 | 1 | 1 | 1 | 1 | 1 | 1 | 1 | 1 | 1 | 1 | 1 | | |

| CUBA / TUB | | | | | | | | | | | | | | | | | ELIMINADO ELIMINATED | INTRODUCIDO INTRODUCED |
|---|---|---|---|---|---|---|---|---|---|---|---|---|---|---|---|---|---|---|
| ITEM | DENOMINACION | NAME | CODIGO | LR-18 | | | LA-18 | | | LR-25 | | | LA-25 | | | | | |
| | | | | E | AC | V | E | AC | V | E | AC | V | E | AC | V | | | |
| 16 | SONDA TEMPERATURA | TEMPERATURE PROBE | P503025000 | 1 | 1 | 1 | 1 | 1 | 1 | 1 | 1 | 1 | 1 | 1 | 1 | | |
| 17 | CASQUILLO CONTRARETEN | COUNTESEAL BUSHING | P626003000 | 1 | 1 | 1 | | | | | | | | | | | |
| | | | P636003000 | | | | 1 | 1 | 1 | 1 | 1 | 1 | | | | | |
| | | | P646003000 | | | | | | | | | | 1 | 1 | 1 | | |
| 18 | RESISTENCIA CALENTAMIENTO | HEATING RESISTOR | 12023242 | 3 | | | 3 | 1 | | | | | | | | | |
| | | | P533001000 | | | | | | | 3 | 1 | | 3 | 1 | | * 31,01,12 | |
| | | | 12041359 | | | | | | | 3 | | | 3 | | | | * 31,01,12 |
| | | | 12024816 | | | | | | | | | | | 1 | | | |
| 19 | TORN. CASQ. CONTRARETEN | COUNTERSEAL BUSHING SCREW | Q122034000 | 3 | 3 | 3 | 3 | 3 | 3 | 3 | 3 | 3 | 3 | 3 | 3 | | |
| 20 | JUNTA TÓRICA | O-RING | Q307075000 | 1 | 1 | 1 | | | | | | | | | | | |
| | | | Q307077000 | | | | 1 | 1 | 1 | 1 | 1 | 1 | | | | | |
| | | | Q307083000 | | | | | | | | | | 1 | 1 | 1 | | |
| 21 | JUNTA CASQ. CONTRARETEN | COUNTERSEAL BUSHING SCREW | P616013000 | 1 | 1 | 1 | | | | | | | | | | | |
| | | | P636011000 | | | | 1 | 1 | 1 | 1 | 1 | 1 | | | | | |
| | | | P646017000 | | | | | | | | | | 1 | 1 | 1 | | |
| 22 | JUNTA CUBA | TUB SEAL | P626110000 | 1 | 1 | 1 | | | | | | | | | | | |
| | | | P636108000 | | | | 1 | 1 | 1 | 1 | 1 | 1 | | | | | |
| | | | P646110000 | | | | | | | | | | 1 | 1 | 1 | | |
| 23 | INYECTOR VAPOR 10,13,18 | STEAM JET 10,13,18 | P615001000 | | | 1 | | | 1 | | | 1 | | | | | |
| | | | P645002000 | | | | | | | | | | | | 1 | | |
| 24 | CIERRE INYECTOR | INJECTOR LOCK | P445011000 | | | 1 | | | 1 | | | 1 | | | 1 | | |
| 24 | CIERRE INYECTOR / RESIST. | INJECTOR AND HEATING CAP | 12024539 | | 3 | 2 | | 2 | 2 | | 3 | 2 | | 2 | 2 | | |
| 25 | ARANDELA VAPOR 10, 13, 18 | STEAM WASHER 10, 13, 18 | P615002000 | | | 2 | | | 2 | | | | | | | | |
| | | | P535024000 | | | | | | | | | 2 | | | 2 | | |
| 26 | MANGUERA VAPOR | STEAM HOSE | P525005000 | | | 1 | | | 1 | | | | | | | | |
| | | | P545011000 | | | | | | | | | 1 | | | 1 | | |
| 27 | CODO | L-BEND | S115013000 | | | 1 | | | 1 | | | 1 | | | | | |
| | | | Z718421000 | | | | | | | | | | | | 1 | | |
| 28 | SOPORTE VALVULA | VALVE SUPPORT | P620327000 | | | 1 | | | 1 | | | 1 | | | | | |
| | | | P645001000 | | | | | | | | | | | | 1 | | |
| 29 | VALVULA VAPOR | STEAM VALVE | P615003000 | | | 1 | | | 1 | | | | | | | | |
| | | | P535023000 | | | | | | | | | 1 | | | 1 | | |
| 30 | RACOR M-M | M-M CONNECTION | S205023000 | | | 1 | | | 1 | | | | | | | | |
| | | | Z102301000 | | | | | | | | | 1 | | | 1 | | |
| 31 | RACOR H-M | H-M CONNECTION | X162101000 | | | 1 | | | 1 | | | 1 | | | | | |
| 32 | TERMOSTATO SEG. 115ºC UL | SAFETY THERMOSTAT 115ºC UL | 12047401 | 1 | 1 | 1 | 1 | 1 | 1 | 1 | 1 | 1 | 1 | 1 | 1 | | 01.12.13 |
| S/Nº | PASAMUROS BULBO | BUSHING BULB | 12023546 | 1 | 1 | 1 | 1 | 1 | 1 | 1 | 1 | 1 | 1 | 1 | 1 | | 01.12.13 |
| S/Nº | SOPORTE TERMOSTATO SEG. | SAFETY THERMOSTAT SUPP. | 12007537 | 1 | 1 | 1 | 1 | 1 | 1 | 1 | 1 | 1 | 1 | 1 | 1 | | 01.12.13 |
| *** EL CAMBIO SE REALIZARA A PARTIR DEL Nº DE SERIE 810002217** | | | *** THIS CHANGE WILL BE DONE FROM SERIAL NUMBER 810002217** | | | | | | | | | | | | | | |

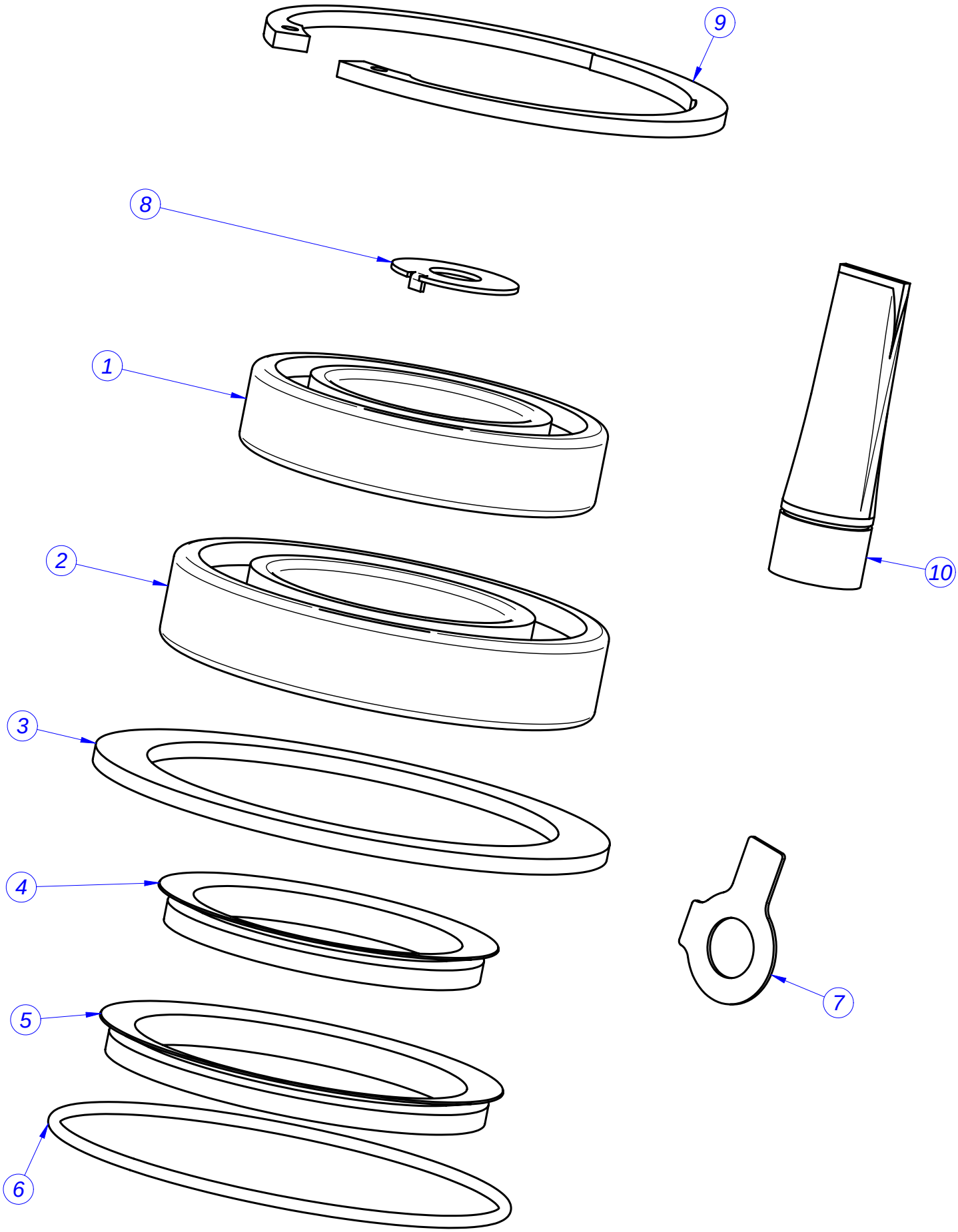
9
8
1
10
2
3
4
7
5
6

| KIT RODAMIENTOS / BEARING KIT | | | | | | | | ELIMINADO ELIMINATED | INTRODUCIDO INTRODUCED |
|---|---|---|---|---|---|---|---|---|---|
| ITEM | DENOMINACION | NAME | CODIGO | LR-18 | LA-18 | LR-25 | LA-25 | | |
| | **KIT RODAMIENTOS 13** | **BEARING KIT 13** | **1300000084** | **1** | | | | | |
| | **KIT RODAMIENTOS 18** | **BEARING KIT 18** | **1300000085** | | **1** | **1** | | | |
| | **KIT RODAMIENTOS 25** | **BEARING KIT 25** | **1300000164** | | | | **1** | | |
| 1 | RODAMIENTO EXTERIOR | OUTER BEARING | P626008000 | 1 | | | | | |
| | | | P626009000 | | 1 | 1 | | | |
| | | | P644904000 | | | | 1 | | |
| 2 | RODAMIENTO INTERIOR | INNER BEARING | P626009000 | 1 | | | | | |
| | | | P636008000 | | 1 | 1 | | | |
| | | | P644903000 | | | | 2 | | |
| 3 | JUNTA CASQ. CONTRARETEN | COUNTERSEAL BUSHING SCREW | P616013000 | 1 | | | | | |
| | | | P636011000 | | 1 | 1 | | | |
| | | | P646017000 | | | | 1 | | |
| 4 | RETEN V-RING 1 | V-RING 1 RETAINER 1 | P624914000 | 1 | | | | | |
| | | | P634912000 | | 1 | 1 | | | |
| | | | P644916000 | | | | 1 | | |
| 5 | RETEN V-RING 2 | V-RING RETAINER 2 | P624913000 | 1 | | | | | |
| | | | P634911000 | | 1 | 1 | | | |
| | | | P644915000 | | | | 1 | | |
| 6 | JUNTA TÓRICA | O-RING | Q307075000 | 1 | | | | | |
| | | | Q307077000 | | 1 | 1 | | | |
| | | | Q307083000 | | | | 1 | | |
| 7 | ARANDELA SEGURIDAD | SAFETY WASHER | Q271302000 | 6 | | | | | |
| | | | Q271306000 | 12 | 18 | 18 | | | |
| | | | Q271304000 | | | | 30 | | |
| 8 | ARANDELA SEG. POLEA | SAFETY WASHER PULLEY | Q301329000 | 1 | 1 | 1 | 1 | | |
| 9 | ANILLO SEGURIDAD | CIRCLIP | Q301030000 | 1 | | | | | |
| | | | Q301036000 | | 1 | 1 | | | |
| | | | Q301045000 | | | | 1 | | |
| 10 | GRASA RETENES | GREASE SEALS | P536544000 | 1 | 1 | 1 | 1 | | |
| | | | | | | | | | |
| | | | | | | | | | |
| | | | | | | | | | |
| | | | | | | | | | |
| | | | | | | | | | |
| | | | | | | | | | |
| | | | | | | | | | |
| | | | | | | | | | |
| | | | | | | | | | |
| | | | | | | | | | |

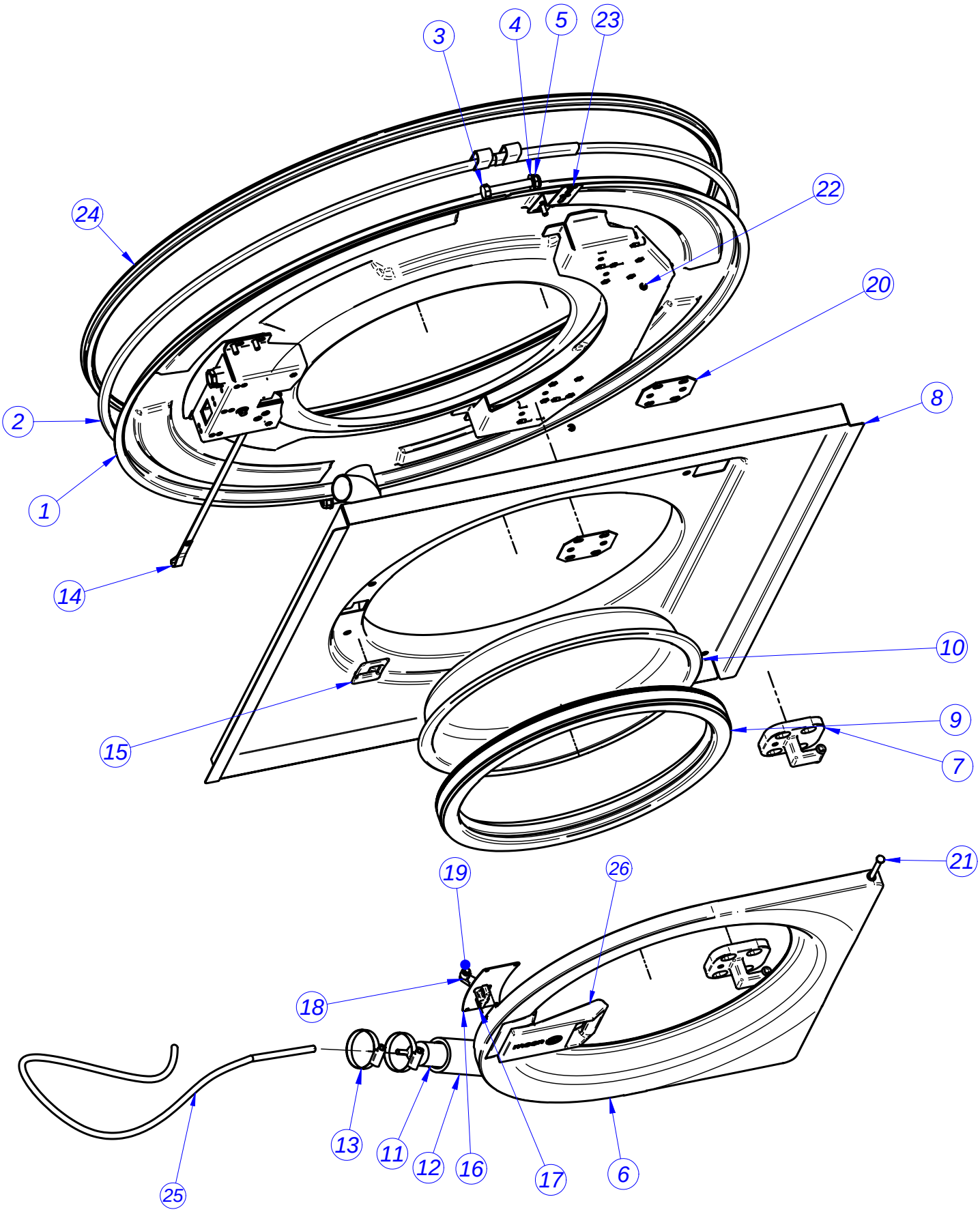
3
4
5
23
24
22
20
2
8
1
14
10
15
9
7
21
19
26
18
13
11
12
16
17
6
25

| FRENTE CUBA / TUB FRONT | | | | | | | | ELIMINADO ELIMINATED | INTRODUCIDO INTRODUCED |
|---|---|---|---|---|---|---|---|---|---|
| ITEM | DENOMINACION | NAME | CODIGO | LR-18 | LA-18 | LR-25 | LA-25 | | |
| 1 | FRENTE CUBA COMPLETO | COMPLETE TUB FRONT | P626112000 | 1 | | | | | |
| | | | P636110000 | | 1 | 1 | | | |
| | | | P646008000 | | | | 1 | | |
| 2 | CIERRE CUBA | TUB LOCK | P626118000 | 1 | | | | | |
| | | | P636112000 | | 1 | 1 | | | |
| | | | P646107000 | | | | 2 | | |
| 3 | TORNILLO CIERRE CUBA | TUB LOCK SCREW | Q011369000 | 1 | 1 | 1 | 2 | | |
| 4 | ARAND. CIERRE | GROWER LOCK | Q232060000 | 2 | 2 | 2 | 4 | | |
| 5 | TUERCA CIERRE CUBA | TUB LOCK NUT | Q221306000 | 1 | 1 | 1 | 2 | | |
| 6 | PUERTA CON MANETA | DOOR WITH LEVER | P620532000 | 1 | 1 | 1 | 1 | | |
| S/Nº | PUERTA 13,8 | DOOR 13,8 | P620503000 | 1 | 1 | 1 | 1 | | |
| S/Nº | MANETA PUERTA FAGOR | DOOR HANDLE FAGOR | P620533000 | 1 | 1 | 1 | 1 | | |
| S/Nº | POMO FAGOR 2010 | KNOB FAGOR 2010 | P640502000 | 1 | 1 | 1 | 1 | | |
| S/Nº | TOR ALLEN M6x20 DIN 7984 | ALLEN SCREW M6x20 DIN 7984 | Q152062000 | 2 | 2 | 2 | 2 | | |
| S/Nº | ARANDELA SEGURIDAD 4 | WASHER SAFETY 4 | Q272020000 | 2 | 2 | 2 | 2 | | |
| S/Nº | MUELLE CIERRE | SPRING LOCK | P620510000 | 1 | 1 | 1 | 1 | | |
| S/Nº | PASADOR CIERRE | LOCKING PIN | P620511000 | 1 | 1 | 1 | 1 | | |
| 7 | BISAGRA PUERTA | DOOR HINGE | P620502000 | 2 | 2 | 2 | 2 | | |
| 8 | FONDO PUERTA | DOOR BASE | P620501000 | 1 | 1 | 1 | 1 | | |
| S/Nº | PERFIL GOMA GRIS EN U 12*6 | GREY RUBBER PROFILE U12*6 | 3673700000 | 1 | 1 | 1 | 1 | | |
| 9 | JUNTA PUERTA | DOOR SEAL | P620528000 | 1 | 1 | 1 | 1 | | |
| 10 | MIRILLA PUERTA | DOOR WINDOW | P530503000 | 1 | 1 | 1 | 1 | | |
| 11 | CAMARA PRESOSTATO | PRESSURE SWITCH | P445002000 | 1 | 1 | 1 | 1 | | |
| 12 | CONDUCTO UNION | PIPE UNION | P502106000 | 1 | 1 | 1 | 1 | | |
| 13 | ABRAZADERA | CLAMP | Q881306000 | 2 | 2 | 2 | 2 | | |
| 14 | CIERRE COMPLETO | COMPLETE LOCK | 12038446 | 1 | 1 | 1 | 1 | | |
| 15 | EMBELLECEDOR CIERRE | LOCK TRIM | P620515000 | 1 | 1 | 1 | 1 | 10,02,14 | |
| 15 | EMBELLECEDOR CIERRE | LOCK TRIM | 12096278 | 1 | 1 | 1 | 1 | | 10,02,14 |
| 16 | TAPA CIERRE | LID CLOSURE | P627816000 | 1 | 1 | 1 | 1 | | |
| 17 | GANCHO CIERRE | LOCK HOOK | P620505000 | 1 | 1 | 1 | 1 | | |
| 18 | CASQUILLO | BUSHING | P610506000 | 1 | 1 | 1 | 1 | | |
| 19 | ANILLO SEGURIDAD | CIRCLIP | Q302061000 | 1 | 1 | 1 | 1 | | |
| 20 | CALZO BISAGRA | HINGE WEDGE | P620521000 | 4 | 4 | 4 | 4 | | |
| 21 | PASADOR PUERTA | DOOR PIN | P620514000 | 2 | 2 | 2 | 2 | | |
| 22 | ARANDELA SEGURIDAD 4 | SAFETY WASHER 4 | Q272020000 | 2 | 2 | 2 | 2 | | |
| 23 | SOPORTE CONDUCTO | PIPE SUPPORT | P626128000 | 1 | 1 | 1 | 1 | | |
| 24 | JUNTA CUBA | TUB SEAL | P626110000 | 1 | | | | | |
| | | | P636108000 | | 1 | 1 | | | |
| | | | P646110000 | | | | 1 | | |
| 25 | TUBO GOMA NEGRO Ø 8*4 | BLACK RUBBER HOSE Ø 8*4 | 3702400000 | 1 | 1 | 1 | 1 | | |

| FRENTE CUBA / TUB FRONT | | | | | | | | ELIMINADO ELIMINATED | INTRODUCIDO INTRODUCED |
|---|---|---|---|---|---|---|---|---|---|
| ITEM | DENOMINACION | NAME | CODIGO | LR-18 | LA-18 | LR-25 | LA-25 | | |
| 26 | POMO FAGOR 2010 | FAGOR 2010 KNOB | P640502000 | 1 | 1 | 1 | 1 | | |
| S/Nº | MANETA PUERTA FAGOR | DOOR HANDLE FAGOR | P620533000 | 1 | 1 | 1 | 1 | | |

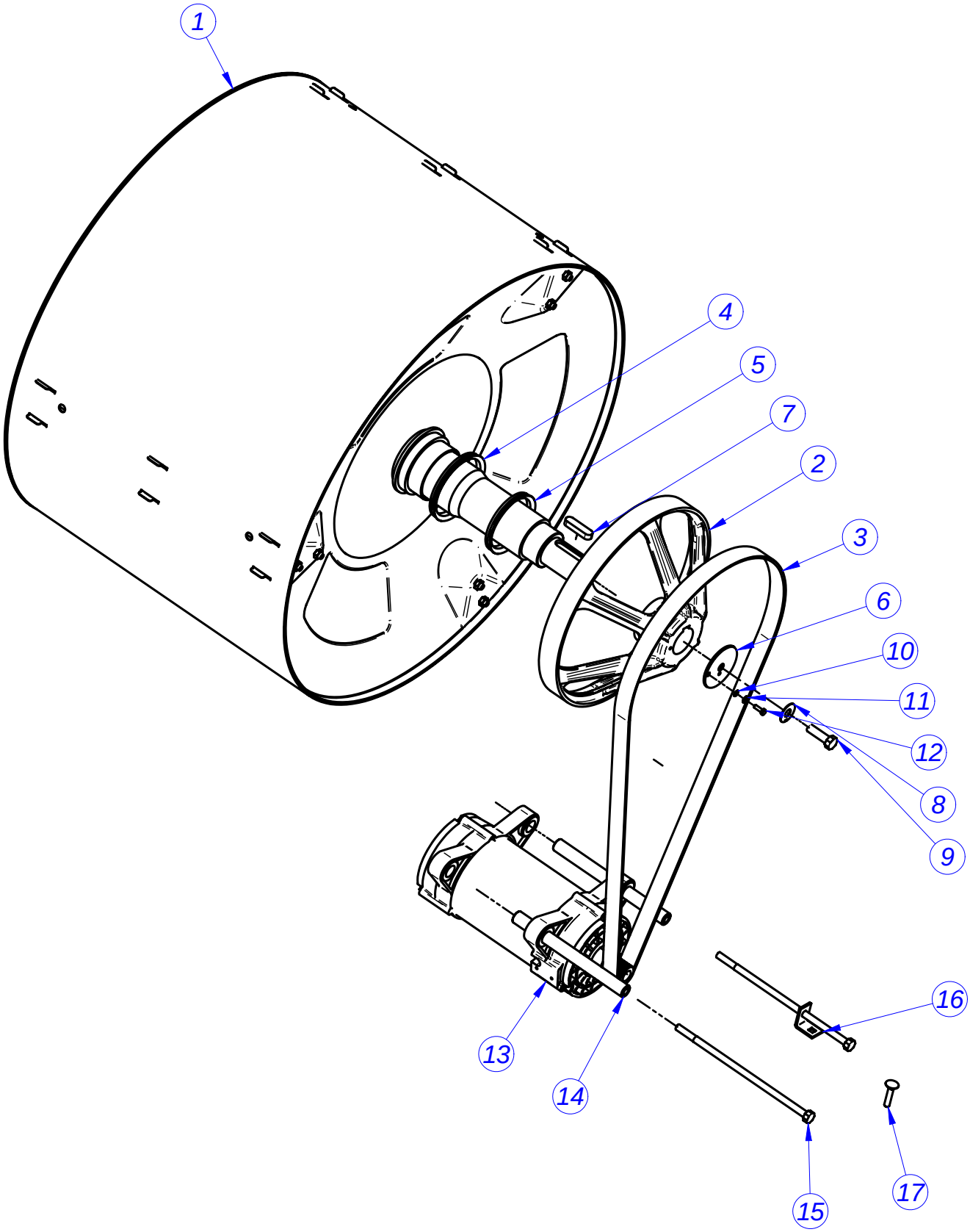
1
4
5
7
2
3
6
10
11
12
8
9
16
13
14
15
17

| TAMBOR / DRUM | | | | | | | | | | | | | | | | | | |
|---|---|---|---|---|---|---|---|---|---|---|---|---|---|---|---|---|---|---|
| ITEM | DENOMINACION | NAME | CODIGO | LR-18 | | | LA-18 | | | LR-25 | | | LA-25 | | | ELIMINADO ELIMINATED | INTRODUCIDO INTRODUCED |
| | | | | MP | M | MA | MP | M | MA | MP | M | MA | MP | M | MA | | |
| 1 | TAMBOR COMPLETO | COMPLETE DRUM | P634010000 | 1 | 1 | 1 | | | | | | | | | | | |
| | | | P634910000 | | | | 1 | 1 | 1 | | | | | | | | |
| | | | P644010000 | | | | | | | 1 | 1 | 1 | | | | | |
| | | | P644912000 | | | | | | | | | | 1 | 1 | 1 | | |
| 2 | POLEA | PULLEY | P626006000 | 1 | 1 | 1 | 1 | 1 | 1 | 1 | 1 | 1 | | | | | |
| | | | P646013000 | | | | | | | | | | 1 | 1 | 1 | | |
| 3 | CORREA | BELT | P635902000 | 1 | 1 | 1 | | | | | | | | | | 02,05,11 | |
| | | | P625903000 | 1 | 1 | 1 | | | | | | | | | | | 02,05,11 |
| | | | P635902000 | | | | 1 | 1 | 1 | | | | | | | | |
| | | | P635908000 | | | | | | | 1 | 1 | 1 | | | | | |
| | | | P645905000 | | | | | | | | | | 1 | 1 | 1 | | |
| 4 | RETEN V-RING 1 | V-RING RETAINER 1 | P624914000 | 1 | 1 | 1 | | | | | | | | | | | |
| | | | P634912000 | | | | 1 | 1 | 1 | 1 | 1 | 1 | | | | | |
| | | | P644916000 | | | | | | | | | | 1 | 1 | 1 | | |
| 5 | RETEN V-RING 2 | V-RING RETAINER 2 | P624913000 | 1 | 1 | 1 | | | | | | | | | | | |
| | | | P634911000 | | | | 1 | 1 | 1 | 1 | 1 | 1 | | | | | |
| | | | P644915000 | | | | | | | | | | 1 | 1 | 1 | | |
| 6 | ARANDELA POLEA | PULLEY WASHER | 12021832 | 1 | 1 | 1 | 1 | 1 | 1 | 1 | 1 | 1 | 1 | 1 | 1 | | |
| 7 | CHAVETA | COTTER PIN | P626010000 | 1 | 1 | 1 | 1 | 1 | 1 | 1 | 1 | 1 | 1 | 1 | 1 | | |
| 8 | ARANDELA SEGURIDAD | SAFETY WASHER | Q301329000 | 1 | 1 | 1 | 1 | 1 | 1 | 1 | 1 | 1 | 1 | 1 | 1 | | |
| 9 | TORNILLO POLEA | PULLEY SCREW | Q011376000 | 1 | 1 | 1 | 1 | 1 | 1 | 1 | 1 | 1 | 1 | 1 | 1 | | |
| 10 | ARANDELA A5 | WASHER A5 | Q232030000 | 1 | 1 | 1 | 1 | 1 | 1 | 1 | 1 | 1 | 1 | 1 | 1 | | |
| 11 | ARAND.ABAN. A5 A.304 | FAN WASHER A5 A.304 | Q242030000 | 1 | 1 | 1 | 1 | 1 | 1 | 1 | 1 | 1 | 1 | 1 | 1 | | |
| 12 | TORN.EXA. M5X15 A.304 | HEX BOLT M5X15 A.304 | Q012032000 | 1 | 1 | 1 | 1 | 1 | 1 | 1 | 1 | 1 | 1 | 1 | 1 | | |
| 13 | MOTOR | ENGINE | P635906000 | 1 | 1 | 1 | 1 | 1 | 1 | | | | | | | | |
| | | | P645902000 | | | | | | | 1 | 1 | 1 | 1 | 1 | 1 | | |
| 14 | TUBO SOPORTE MOTOR | MOTOR SUPPORT HOSE | P635907000 | 2 | 2 | 2 | 2 | 2 | 2 | | | | | | | | |
| | | | P645903000 | | | | | | | 2 | 2 | 2 | 2 | 2 | 2 | | |
| 15 | TORNILLO MOTOR | MOTOR SCREW | Q151527000 | 2 | 2 | 2 | 2 | 2 | 2 | | | | | | | | |
| | | | Q151591000 | | | | | | | 2 | 2 | 2 | 2 | 2 | 2 | | |
| 16 | TENSOR MOTOR | MOTOR TENSOR | P620214000 | 1 | 1 | 1 | 1 | 1 | 1 | 1 | 1 | 1 | 1 | 1 | 1 | | |
| 17 | TORNILLO TENSOR | TENSOR SCREW | Q151393000 | 1 | 1 | 1 | 1 | 1 | 1 | 1 | 1 | 1 | 1 | 1 | 1 | | |
| 19 | CASQUILLO EJE | AXIS BUSHING | 12023262 | 1 | 1 | 1 | | | | | | | | | | | |
| 19 | CASQUILLO EJE | AXIS BUSHING | 12023256 | | | | 1 | 1 | 1 | 1 | 1 | 1 | | | | | |
| 19 | CASQUILLO EJE | AXIS BUSHING | 12007749 | | | | | | | | | | 1 | 1 | 1 | | |
| | | | | | | | | | | | | | | | | | |
| | | | | | | | | | | | | | | | | | |
| | | | | | | | | | | | | | | | | | |
| | | | | | | | | | | | | | | | | | |
| | | | | | | | | | | | | | | | | | |

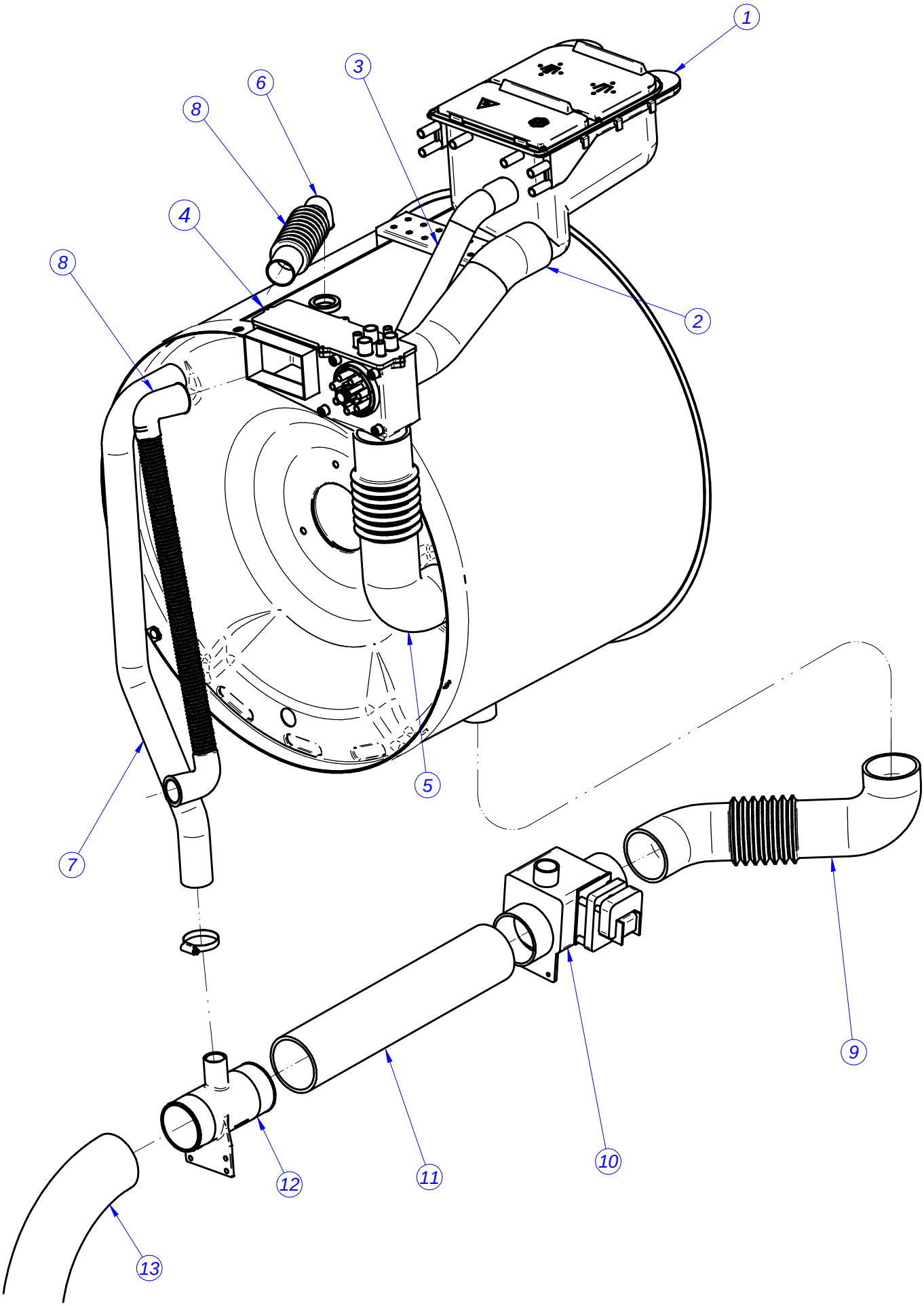


CUBETERA / TRAY

| CUBETERA / TRAY | | | | | | | | | | | | | | | | | | | | |
|---|---|---|---|---|---|---|---|---|---|---|---|---|---|---|---|---|---|---|---|---|
| ITEM | DENOMINACION | NAME | CODIGO | LR-18 | | | LA-18 | | | LR-25 | | | LA-25 | | | ELIMINADO ELIMINATED | INTRODUCIDO INTRODUCED |
| | | | | MP | M | MA | MP | M | MA | MP | M | MA | MP | M | MA | | |
| 1 | CUBETA DETERGENTES | DETERGENT TRAY | P620712000 | 1 | 1 | 1 | 1 | 1 | 1 | 1 | 1 | 1 | 1 | 1 | 1 | | |
| S/Nº | TAPON CUBETA DETERGENTES | DETERGENT TRAY SUPPORT | P620724000 | 2 | 2 | 2 | 2 | 2 | 2 | 2 | 2 | 2 | 2 | 2 | 2 | | |
| S/Nº | APOYO CUBETA DETERGENTES | DETERGENT TRAY SUPPORT | P610360000 | 1 | 1 | 1 | 1 | 1 | 1 | 1 | 1 | 1 | 1 | 1 | 1 | | 01.12.10 |
| 2 | CONDUCTO CUBETERA | TRAY PIPE | P634022000 | 1 | 1 | 1 | | | | | | | 1 | 1 | 1 | | |
| | | | P630705000 | | | | 1 | 1 | 1 | | | | | | | | |
| | | | P644033000 | | | | | | | 1 | 1 | 1 | | | | | |
| 3 | CONDUCTO REBOSADERO CUBETERA | TRAY OVERFLOW PIPE | P634023000 | 1 | 1 | 1 | | | | | | | 1 | 1 | 1 | | |
| | | | P630706000 | | | | 1 | 1 | 1 | | | | | | | | |
| | | | P644034000 | | | | | | | 1 | 1 | 1 | | | | | |
| 4 | CAJA COLECTOR | MANIFOLD BOX | P620723000 | 1 | 1 | 1 | 1 | 1 | 1 | 1 | 1 | 1 | 1 | 1 | 1 | | |
| S/Nº | BARRERA COLECTOR | COLLECTOR BARRIER | P610717000 | 1 | 1 | 1 | 1 | 1 | 1 | 1 | 1 | 1 | 1 | 1 | 1 | 11,12,11 | |
| S/Nº | BARRERA SALPICADERO | DASHBOARD BARRIER | 12041839 | 1 | 1 | 1 | 1 | 1 | 1 | 1 | 1 | 1 | 1 | 1 | 1 | | 11,12,11 |
| S/Nº | BARRERA COLECT. OPUESTA | COLLECT. BARRIER OPPOSITE | P610718000 | 1 | 1 | 1 | 1 | 1 | 1 | 1 | 1 | 1 | 1 | 1 | 1 | 11,12,11 | |
| S/Nº | TAPON CAJA COLECTOR 8 | COLLECTOR BOX PLUG 8 | P620726000 | 1 | 1 | 1 | 1 | 1 | 1 | 1 | 1 | 1 | 1 | 1 | 1 | | |
| S/Nº | TAPON CAJA COLECTOR 16 | COLLECTOR BOX PLUG 16 | P620727000 | 1 | 1 | 1 | 1 | 1 | 1 | 1 | 1 | 1 | 1 | 1 | 1 | | |
| S/Nº | JUNTA TAPA COLECTOR | BOARD COVER COLLECTOR | P620728000 | 1 | 1 | 1 | 1 | 1 | 1 | 1 | 1 | 1 | 1 | 1 | 1 | | |
| 5 | CONDUCTO ENTRADA AGUA | WATER INPUT PIPE | 12025016 | 1 | 1 | 1 | | | | | | | | | | | |
| | | | 12025017 | | | | 1 | 1 | 1 | 1 | 1 | 1 | 1 | 1 | 1 | | |
| 7 | CONDUCTO REBOSADERO | OVERFLOW PIPE | P620704000 | 1 | 1 | 1 | | | | | | | | | | | |
| | | | P630702000 | | | | 1 | 1 | 1 | | | | | | | | |
| | | | P640703000 | | | | | | | 1 | 1 | 1 | 1 | 1 | 1 | | |
| 8 | SALIDA VAPOR | STEAM OUTPUT | 12007821 | 1 | 1 | 1 | 1 | 1 | 1 | 1 | 1 | 1 | 1 | 1 | 1 | | |
| 9 | CONDUCTO DESAGÜE | DRAINAGE PIPE | P634021000 | 1 | 1 | 1 | | | | | | | | | | | |
| | | | P630703000 | | | | 1 | 1 | 1 | | | | | | | 01.12.13 | |
| | | | 12044165 | 1 | 1 | 1 | 1 | 1 | 1 | | | | | | | | 01.12.13 |
| | | | P532119000 | | | | | | | 1 | 1 | 1 | 1 | 1 | 1 | 01.12.13 | |
| | | | 12025016 | | | | | | | 1 | 1 | 1 | | | | | 01.12.13 |
| | | | 12025017 | | | | | | | | | | 1 | 1 | 1 | | 01.12.13 |
| S/Nº | TAPON DOBLE DESAGUE | DOUBLE PLUG DRAIN | P646526000 | 1 | 1 | 1 | 1 | 1 | 1 | 1 | 1 | 1 | 1 | 1 | 1 | | 01.04.11 |
| 10 | VALVULA | VALVE | P302120000 | 1 | 1 | 1 | 1 | 1 | 1 | | | | | | | 01.12.13 | |
| | | | P532103000 | | | | | | | 1 | 1 | 1 | 1 | 1 | 1 | | |
| 10 | EV 230V AC 50/60Hz 1 VIA | EV 230V AC 50/60Hz 1 WAY | 12024404 | 1 | 1 | 1 | 1 | 1 | 1 | 1 | 1 | 1 | 1 | 1 | 1 | | 01.12.13 |
| S/Nº | TAPA VAULA DESAGUE | DRAINAGE VALVE COVER | 12095938 | 1 | 1 | 1 | 1 | 1 | 1 | 1 | 1 | 1 | 1 | 1 | 1 | | 01.12.13 |
| 11 | CONDUCTO VAULA-SALIDA | OUTPUT VALVE PIPE | 12046140 | 1 | 1 | 1 | | | | 1 | 1 | 1 | | | | | 01.12.14 |
| | | | 12046139 | | | | 1 | 1 | 1 | | | | | | | | 01.12.13 |
| | | | 12046144 | | | | | | | | | | 1 | 1 | 1 | | 01.12.13 |
| 12 | SALIDA DESAGUE 3" | DRAINAGE OUTPUT 3" | 12046868 | 1 | 1 | 1 | 1 | 1 | 1 | 1 | 1 | 1 | 1 | 1 | 1 | | 01.12.13 |
| 13 | CONDUCTO CUBETERA LA-25 | TRAY PIPE LA-25 | 12024890 | 1 | 1 | 1 | 1 | 1 | 1 | 1 | 1 | 1 | 1 | 1 | 1 | | 01.12.13 |
| | | | | | | | | | | | | | | | | | |
| | | | | | | | | | | | | | | | | | |

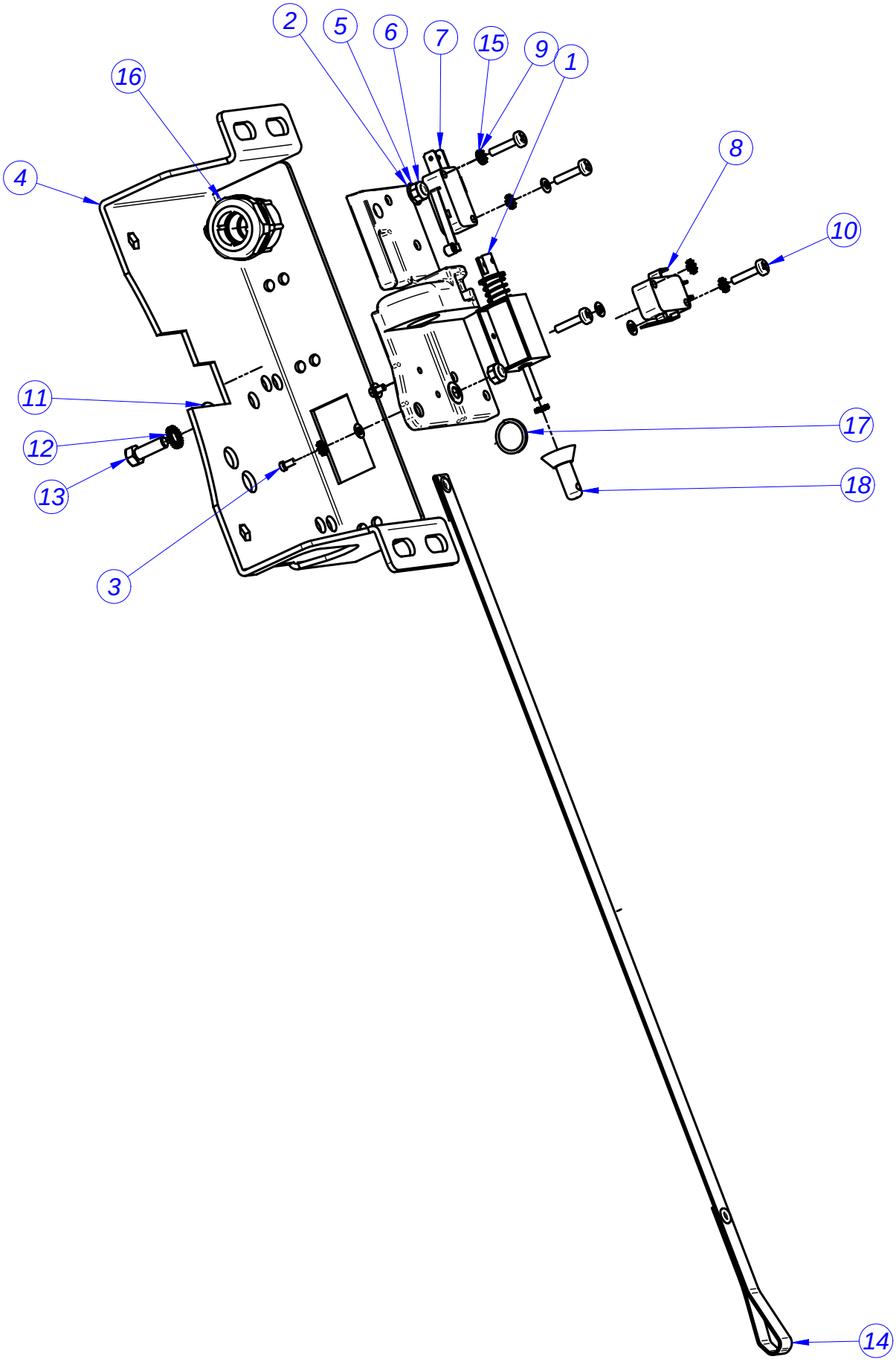
2
5
6
7
15
9
1
16
8
4
10
11
17
12
18
13
3
14

| CIERRE / LOCK | | | | | | | | ELIMINADO ELIMINATED | INTRODUCIDO INTRODUCED |
|---|---|---|---|---|---|---|---|---|---|
| ITEM | DENOMINACION | NAME | CODIGO | LR-18 | LA-18 | LR-25 | LA-25 | | |
| | **CIERRE COMPLETO** | **COMPLETE LOCK** | **P620516000** | **1** | **1** | **1** | **1** | **02,10,11** | |
| | **CIERRE COMPLETO FAGOR** | **COMPLETE LOCK FAGOR** | **12038446** | **1** | **1** | **1** | **1** | | **02,10,11** |
| 1 | ELECTROIMAN PUERTA | DOOR ELECTROMAGNET | P613002000 | 1 | 1 | 1 | 1 | | |
| 2 | BASE CIERRE V3 | LOCK BASE V3 | P620534000 | 1 | 1 | 1 | 1 | | |
| 3 | TORN. ALLEN M2.5x5 | ALLEN SCREW M2.5x5 | Q151396000 | 2 | 2 | 2 | 2 | | |
| 4 | CALZO CIERRE FAGOR 13,18,25 | WEDGE FAGOR LOCK 13,18,25 | P620530000 | 1 | 1 | 1 | 1 | | |
| 5 | ARANDELA A5 | WASHER A5 | Q232030000 | 2 | 2 | 2 | 2 | | |
| 6 | TUER.AUTOB.M5 | SELF-LOCK NUT M5 | Q222030000 | 2 | 2 | 2 | 2 | | |
| 7 | INTERRUPTOR PUERTA | DOOR SWITCH | R010534000 | 1 | 1 | 1 | 1 | | |
| 8 | INTERRUPTOR PUERTA PLANO | FLAT DOOR SWITCH | P620526000 | 1 | 1 | 1 | 1 | | |
| 9 | ARAND.ABAN. A.3 A304 | FAN WASHER A.3 A304 | Q242010000 | 8 | 8 | 8 | 8 | | |
| 10 | TORNILLO ALOMADO M3X15 | CURVED SCREW M3X15 | Q032012000 | 4 | 4 | 4 | 4 | | |
| 11 | ARANDELA 16X6X1.2 A.304 | WASHER 16X6X1.2 A.304 | Q302022000 | 1 | 1 | 1 | 1 | | |
| 12 | ARAND.ABAN. A5 A.304 | FAN WASHER A5 A.304 | Q242030000 | 1 | 1 | 1 | 1 | | |
| 13 | TORN.EXA. M5X15 A.304 | HEX BOLT M5X15 A.304 | Q012032000 | 1 | 1 | 1 | 1 | | |
| 14 | TIRADOR PUERTA | DOOR PULL | P620520000 | 1 | 1 | 1 | 1 | | |
| 15 | ARANDELA PLANA A3,DIN125 | FLAT WASHER A3,DIN125 | Q232010000 | 6 | 6 | 6 | 6 | | |
| 16 | PRENSA ESTOPAS | STUFFING BOX | R073004000 | 1 | 1 | 1 | 1 | | |
| 17 | ANILLO ELECTROIMAN | ELECTROMAGNETIC RING | P620525000 | 1 | 1 | 1 | 1 | | |
| 18 | DESBLOQUEO | UNLOCK | P620529000 | 1 | 1 | 1 | 1 | | |
| 19 | CABLEADO CIERRE | LOCK WIRING | P633010000 | 1 | 1 | 1 | 1 | | |
| | | | | | | | | | |
| | | | | | | | | | |
| | | | | | | | | | |
| | | | | | | | | | |
| | | | | | | | | | |
| | | | | | | | | | |
| | | | | | | | | | |
| | | | | | | | | | |
| | | | | | | | | | |
| | | | | | | | | | |
| | | | | | | | | | |
| | | | | | | | | | |
| | | | | | | | | | |
| | | | | | | | | | |
| | | | | | | | | | |
| | | | | | | | | | |
| | | | | | | | | | |
| | | | | | | | | | |

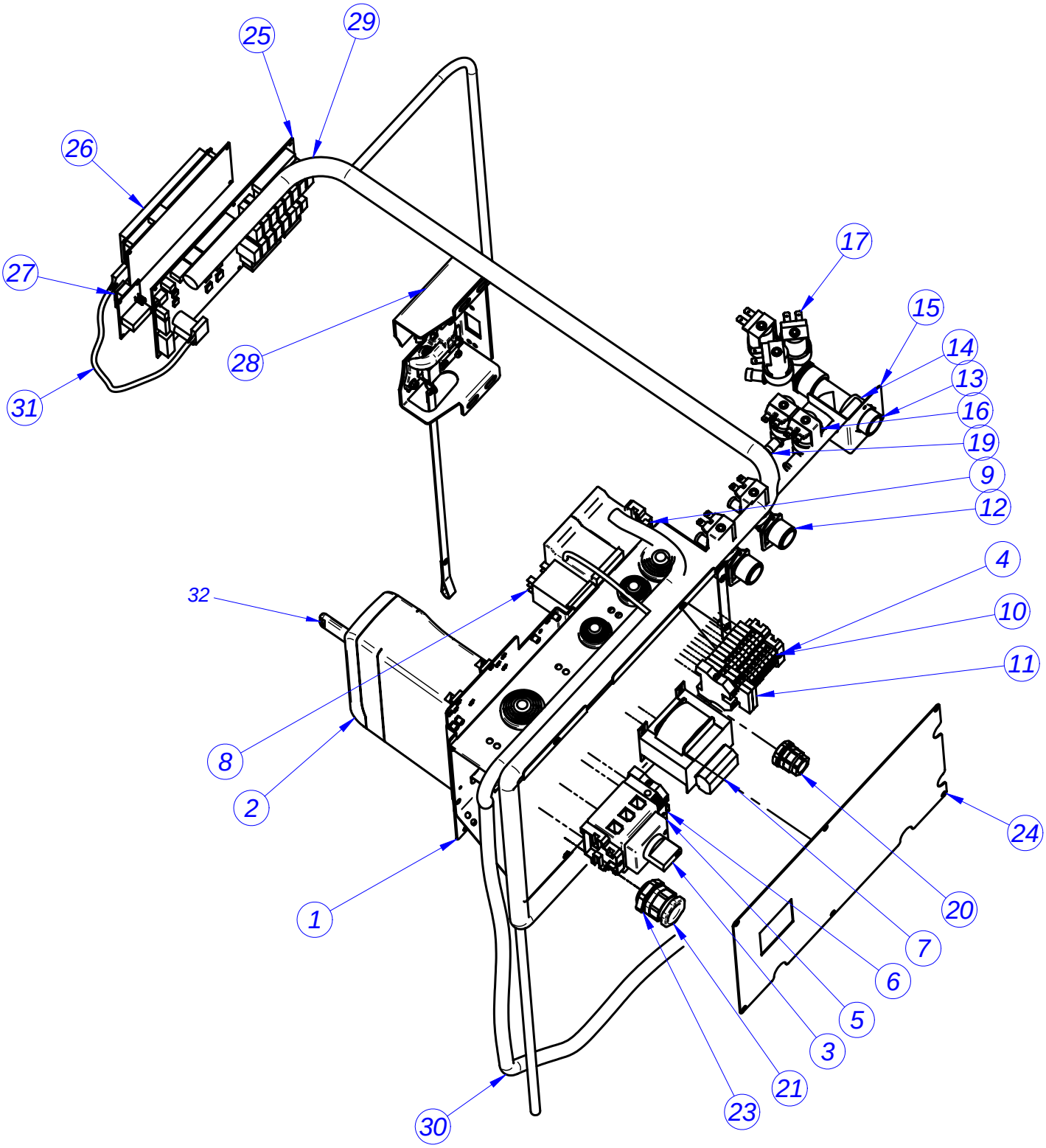
25
29
26
27
28
31
17
15
14
13
16
19
9
12
4
10
11
32
8
2
1
24
20
7
6
5
3
21
23
30

| CUADRO ELECTRICO / ELECTRIC PANEL | | | | | | | | | | | | | | | | | | | | | | | |
|---|---|---|---|---|---|---|---|---|---|---|---|---|---|---|---|---|---|---|---|---|---|---|---|
| ITEM | DENOMINACION | NAME | CODIGO | LR-18 | | | | | | | | LA-18 | | | | | | | | ELIMINADO ELIMINATED | INTRODUCIDO INTRODUCED |
| | | | | MP | | | M | | | MA | | MP | | | M | | | MA | | | |
| | CALENTAMIENTO | | | E | AC | V | E | AC | V | E | AC | E | AC | V | E | AC | V | E | AC | | |
| 1 | PORTA CUADRO ELECTRICO | ELCTRIC PANEL HOLDER | P620347000 | 1 | 1 | 1 | 1 | 1 | 1 | 1 | 1 | | | | | | | | | | |
| | | | P644020000 | | | | | | | | | 1 | 1 | 1 | 1 | 1 | 1 | 1 | 1 | | |
| 2 | REP VARIADOR PROGRAMADO | REP VARIATOR PROGRAMMED | 12045945 | 1 | 1 | 1 | 1 | 1 | 1 | 1 | 1 | | | | | | | | | | |
| | | | 12038441 | | | | | | | | | 1 | 1 | 1 | 1 | 1 | 1 | 1 | 1 | | |
| S/Nº | CALZO VARIADOR | SHIM VARIATOR | 12001578 | 1 | 1 | 1 | 1 | 1 | 1 | 1 | 1 | 1 | 1 | 1 | 1 | 1 | 1 | 1 | 1 | | |
| 3 | SECCIONADOR | SECCIONADOR | 12024858 | | 1 | 1 | | 1 | 1 | | 1 | | 1 | 1 | | 1 | 1 | | 1 | | |
| | | | 12024628 | 1 | | | 1 | | | 1 | | 1 | | | 1 | | | 1 | | | |
| 4 | TOPE FINAL | END STOP | Z263303000 | 3 | 3 | 3 | 3 | 3 | 3 | 3 | 3 | 3 | 3 | 3 | 3 | 3 | 3 | 3 | 3 | | |
| 5 | BORNA AZUL | BLUE TERMINAL | 12025143 | 1 | 1 | 1 | 1 | 1 | 1 | 1 | 1 | 1 | 1 | 1 | 1 | 1 | 1 | 1 | 1 | | |
| 6 | BORNA TIERRA | EARTH TERMINAL | 12024515 | 1 | 1 | 1 | 1 | 1 | 1 | 1 | 1 | 1 | 1 | 1 | 1 | 1 | 1 | 1 | 1 | | |
| 7 | TRANSFORMADOR | TRANSFORMER | P623028000 | 1 | 1 | 1 | 1 | 1 | 1 | 1 | 1 | 1 | 1 | 1 | 1 | 1 | 1 | 1 | 1 | | |
| 8 | RELE 230V AC 50/60Hz 16A 2vía | RELAY 16A 230V AC 50/60Hz 2v | Z203062000 | 2 | 2 | 2 | 2 | 2 | 2 | 2 | 2 | 2 | 2 | 2 | 2 | 2 | 2 | 2 | 2 | | |
| 9 | CONTACTOR CALENTAMIENTO | HEATING CONTACTOR | 12024040 | 2 | | | 2 | | | 2 | | 2 | | | 2 | | | 2 | | | |
| | | | 12024039 | | 1 | | | 1 | | | 1 | | 1 | | | 1 | | | 1 | | |
| 10 | REGLETA DOSIFICACION | DISPENSER TERMINAL STRIP | 12025180 | 8 | 8 | 8 | 5 | 5 | 5 | 6 | 6 | 8 | 8 | 8 | 5 | 5 | 5 | 5 | 5 | | |
| 11 | BORNA PORTAFUSIBLE | FUSEHOLDER TERMINAL | R073005000 | 2 | 2 | 2 | 2 | 2 | 2 | 2 | 2 | 2 | 2 | 2 | 2 | 2 | 2 | 2 | 2 | | |
| S/Nº | CARTUCHO FUSIBLE 4A | FUSE 4A | 12024333 | 2 | 2 | 2 | 2 | 2 | 2 | 2 | 2 | 2 | 2 | 2 | 2 | 2 | 2 | 2 | 2 | | |
| 12 | ELECTROVALVULA SIMPLE | SIMPLE SOLENOID VALVE | 12025161 | 2 | 1 | 2 | 1 | | 1 | | | 2 | 1 | 2 | 1 | | 1 | 1 | | | |
| 13 | RACOR 3/4" | 3/4" CONNECTION | 12024396 | 1 | 1 | 1 | 1 | 1 | 1 | 1 | 1 | 1 | 1 | 1 | 1 | 1 | 1 | 1 | 1 | | |
| 14 | Te A 90º | T at 90º | P535020000 | 1 | 1 | 1 | 1 | 1 | 1 | 1 | 1 | 1 | 1 | 1 | 1 | 1 | 1 | 1 | 1 | | |
| 15 | TOPE ELECTROVALVULA | SOLENOID VALVE STOP | P535003000 | 1 | 1 | 1 | 1 | 1 | 1 | 1 | 1 | 1 | 1 | 1 | 1 | 1 | 1 | 1 | 1 | | |
| 16 | ELECTROVALVULA DOBLE | DOUBLE SOLENOID VALVE | 12023794 | 1 | 1 | 1 | 1 | 1 | 1 | 1 | 1 | 1 | 1 | 1 | 1 | 1 | 1 | 1 | 1 | | |
| 17 | ELECTROVALVULA TRIPLE | TRIPLE SOLENOID VALVE | 12023921 | | | | 1 | 1 | 1 | 1 | 1 | 1 | 1 | 1 | 1 | 1 | 1 | 1 | 1 | | |
| 19 | REGULADOR VERDE | GREEN REGULATOR | P443042000 | 2 | 2 | 2 | 2 | 2 | 2 | 2 | 2 | 2 | 2 | 2 | 2 | 2 | 2 | 2 | 2 | 11.11.13 | |
| 19 | REGULADOR 3L BELTZA 254.023 | BLACK REGULATOR 254.023 | 12097038 | 2 | 2 | 2 | 2 | 2 | 2 | 2 | 2 | 2 | 2 | 2 | 2 | 2 | 2 | 2 | 2 | | 11.11.13 |
| 20 | PRENSA ESTOPA DOSIFICACION | DISPENSER STUFFING BOX | R073004000 | 1 | 1 | 1 | 1 | 1 | 1 | 1 | 1 | 1 | 1 | 1 | 1 | 1 | 1 | 1 | 1 | | |
| 21 | PRENSA ESTOPA PG-21 | STUFFING BOX PG-21 | R023013000 | 1 | 1 | 1 | 1 | 1 | 1 | 1 | 1 | 1 | 1 | 1 | 1 | 1 | 1 | 1 | 1 | | |
| 22 | JUNTA GOMA | RUBBER SEAL | R023026000 | 1 | 1 | 1 | 1 | 1 | 1 | 1 | 1 | 1 | 1 | 1 | 1 | 1 | 1 | 1 | 1 | | |
| 23 | TUERCA ROSCA Pg 21 | SCREW THREAD Pg 21 | Q223016000 | 1 | 1 | 1 | 1 | 1 | 1 | 1 | 1 | 1 | 1 | 1 | 1 | 1 | 1 | 1 | 1 | 18,10,13 | |
| 23 | CONTRATUERCA (GAES) | LOCKNUT (GAES) | 12010063 | 1 | 1 | 1 | 1 | 1 | 1 | 1 | 1 | 1 | 1 | 1 | 1 | 1 | 1 | 1 | 1 | | 18,10,13 |
| 24 | TAPA CONEXIONES | CONNECTIONS COVER | 12001580 | | 1 | 1 | | 1 | 1 | | 1 | | 1 | 1 | | 1 | 1 | | 1 | | |
| | | | 12001581 | 1 | | | 1 | | | 1 | | 1 | | | 1 | | | 1 | | | |
| 25 | PLACA ENTRADAS-SALIDAS | INLET-OUTLET PLATE | 12024457 | 1 | 1 | 1 | | | | | | 1 | 1 | 1 | | | | | | | |
| | | | 12024197 | | | | 1 | 1 | 1 | 1 | 1 | | | | 1 | 1 | 1 | 1 | 1 | | |
| 26 | VISUALIZADOR | VIEWER | 12023357 | 1 | 1 | 1 | | | | | | 1 | 1 | 1 | | | | | | | |
| | | | 12024780 | | | | 1 | 1 | 1 | 1 | 1 | | | | 1 | 1 | 1 | 1 | 1 | | |
| 27 | INTERRUPTOR GENERAL | POWER SWITCH | 12024634 | 1 | 1 | 1 | 1 | 1 | 1 | | | 1 | 1 | 1 | 1 | 1 | 1 | | | | |
| 27 | CABLEADO CONECTOR PUENTE | WIRING CONNECTOR BRIDGE | 12025206 | | | | | | | 1 | 1 | | | | | | | 1 | 1 | | |

| CUADRO ELECTRICO / ELECTRIC PANEL | | | | | | | | | | | | | | | | | | | | | |
|---|---|---|---|---|---|---|---|---|---|---|---|---|---|---|---|---|---|---|---|---|---|
| ITEM | DENOMINACION | NAME | CODIGO | LR-18 | | | | | | | | LA-18 | | | | | | | | ELIMINADO ELIMINATED | INTRODUCIDO INTRODUCED |
| | | | | MP | | | M | | | MA | | MP | | | M | | | MA | | | |
| | CALENTAMIENTO | | | E | AC | V | E | AC | V | E | AC | E | AC | V | E | AC | V | E | AC | | |
| 28 | CIERRE COMPLETO | COMPLETE LOCK | 12003913 | 1 | 1 | 1 | 1 | 1 | 1 | 1 | 1 | 1 | 1 | 1 | 1 | 1 | 1 | 1 | 1 | | |
| 29 | INSTALACION GENERAL | GENERAL INSTALLATION | 12007942 | 1 | 1 | 1 | 1 | 1 | 1 | 1 | 1 | 1 | 1 | 1 | 1 | 1 | 1 | 1 | 1 | | |
| 30 | CABLE CALENTAMIENTO | HEATING CABLE | 12024944 | 1 | | | 1 | | | 1 | | 1 | | | 1 | | | 1 | | | |
| | | | 12025067 | | | 1 | | | 1 | | | | | 1 | | | 1 | | | | |
| | | | 12024818 | | | | | | | | | | 1 | | | 1 | | | 1 | | |
| 31 | CABLE COMUNICACION | COMMUNICATION CABLE | 12025136 | 1 | 1 | 1 | | | | | | 1 | 1 | 1 | | | | | | | |
| | | | 12023293 | | | | 1 | 1 | 1 | 1 | 1 | | | | 1 | 1 | 1 | 1 | 1 | | |
| 32 | PLC PROGRAMADO 2,2KW | PLC PROGRAMMED 2,2KW | 12043486 | 1 | 1 | 1 | 1 | 1 | 1 | 1 | 1 | | | | | | | | | | |
| 32 | PLC PROGRAMADO 2,2KW | PLC PROGRAMMED 2,2KW | 12002437 | | | | | | | | | 1 | 1 | 1 | 1 | 1 | 1 | 1 | 1 | | |

| CUADRO ELECTRICO / ELECTRIC PANEL | | | | | | | | | | | | | | | | | | | | | | | |
|---|---|---|---|---|---|---|---|---|---|---|---|---|---|---|---|---|---|---|---|---|---|---|---|
| ITEM | DENOMINACION | NAME | CODIGO | LR-25 | | | | | | | | LA-25 | | | | | | | | ELIMINADO ELIMINATED | INTRODUCIDO INTRODUCED |
| | | | | MP | | | M | | | MA | | MP | | | M | | | MA | | | |
| | CALENTAMIENTO | | | E | AC | V | E | AC | V | E | AC | E | AC | V | E | AC | V | E | AC | | |
| 1 | PORTA CUADRO ELECTRICO | ELCTRIC PANEL HOLDER | P644020000 | 1 | 1 | 1 | 1 | 1 | 1 | 1 | 1 | 1 | 1 | 1 | 1 | 1 | 1 | 1 | 1 | | |
| 2 | REP VARIADOR PROGRA. 400V | REP VARIATOR PROGRA. 400V | 12038440 | 1 | 1 | 1 | 1 | 1 | 1 | 1 | 1 | 1 | 1 | 1 | 1 | 1 | 1 | 1 | 1 | 13,02,12 | |
| 2 | REP VARIADOR PROGRA. 230V | REP VARIATOR PROGRA. 230V | 12038439 | 1 | 1 | 1 | 1 | 1 | 1 | 1 | 1 | 1 | 1 | 1 | 1 | 1 | 1 | 1 | 1 | 13,02,12 | |
| 2 | REP VARIADOR PROGRA. LR-25 | REP VARIATOR PROGRA. LR-25 | 12045944 | 1 | 1 | 1 | 1 | 1 | 1 | 1 | 1 | | | | | | | | | | 13,02,12 |
| 2 | REP VARIADOR PROGRA. LA-25 | REP VARIATOR PROGRA. LA-25 | 12043612 | | | | | | | | | 1 | 1 | 1 | 1 | 1 | 1 | 1 | 1 | | 13,02,12 |
| S/Nº | CALZO VARIADOR | SHIM VARIATOR | 12001564 | 1 | 1 | 1 | 1 | 1 | 1 | 1 | 1 | 1 | 1 | 1 | 1 | 1 | 1 | 1 | 1 | | |
| 3 | SECCIONADOR | SECCIONADOR | 12024858 | | 1 | 1 | | 1 | 1 | | 1 | | 1 | 1 | | 1 | 1 | | 1 | | |
| | | | 12024628 | 1 | | | 1 | | | 1 | | 1 | | | 1 | | | 1 | | | |
| 4 | TOPE FINAL | END STOP | Z263303000 | 3 | 3 | 3 | 3 | 3 | 3 | 3 | 3 | 3 | 3 | 3 | 3 | 3 | 3 | 3 | 3 | | |
| 5 | BORNA AZUL | BLUE TERMINAL | 12025143 | 1 | 1 | 1 | 1 | 1 | 1 | 1 | 1 | 1 | 1 | 1 | 1 | 1 | 1 | 1 | 1 | | |
| 6 | BORNA TIERRA | EARTH TERMINAL | 12024515 | 1 | 1 | 1 | 1 | 1 | 1 | 1 | 1 | 1 | 1 | 1 | 1 | 1 | 1 | 1 | 1 | | |
| 7 | TRANSFORMADOR | TRANSFORMER | P623028000 | 1 | 1 | 1 | 1 | 1 | 1 | 1 | 1 | 1 | 1 | 1 | 1 | 1 | 1 | 1 | 1 | | |
| 8 | CONTACTOR 230V AC 50/60Hz | CONTACTOR 230V AC 50/60Hz | 12041014 | 2 | | | 2 | | | 2 | | 2 | | | 2 | | | 2 | | | |
| 9 | CONTACTOR CALENTAMIENTO | HEATING CONTACTOR | 12024040 | | 2 | 1 | | 2 | 1 | | 1 | | 2 | 1 | | 2 | 1 | | 1 | | |
| S/Nº | CONTACTOR AUXILIAR 230V | AUXILIARY CONTACTOR 230V | 12043923 | | | | | | | 1 | | | | | | | | 1 | | | 01,02,12 |
| 10 | REGLETA DOSIFICACION | DISPENSER TERMINAL STRIP | 12025180 | 8 | 8 | 8 | 6 | 6 | 6 | 6 | 6 | 8 | 8 | 8 | 5 | 5 | 5 | 5 | 5 | | |
| 11 | BORNA PORTAFUSIBLE | FUSEHOLDER TERMINAL | R073005000 | 2 | 2 | 2 | 2 | 2 | 2 | 2 | 2 | 2 | 2 | 2 | 2 | 2 | 2 | 2 | 2 | | |
| S/Nº | CARTUCHO FUSIBLE 4A | FUSE 4A | 12024333 | 2 | 2 | 2 | 2 | 2 | 2 | 2 | 2 | 2 | 2 | 2 | 2 | 2 | 2 | 2 | 2 | | |
| 12 | ELECTROVALVULA SIMPLE | SIMPLE SOLENOID VALVE | 12025161 | 1 | 1 | 1 | 1 | 1 | 1 | 1 | 1 | 1 | 1 | 1 | 1 | 1 | 1 | 1 | 1 | | |
| 13 | RACOR 3/4" | 3/4" CONNECTION | 12024396 | 5 | 5 | 7 | 4 | 4 | 6 | 4 | 4 | 5 | 5 | 7 | 4 | 4 | 6 | 4 | 4 | | |
| 14 | Te A 90º | T at 90º | P535020000 | 1 | 1 | 1 | 1 | 1 | 1 | 1 | 1 | 1 | 1 | 1 | 1 | 1 | 1 | 1 | 1 | | |
| 15 | TOPE ELECTROVALVULA | SOLENOID VALVE STOP | P535003000 | 1 | 1 | 1 | 1 | 1 | 1 | 1 | 1 | 1 | 1 | 1 | 1 | 1 | 1 | 1 | 1 | | |
| 17 | ELECTROVALVULA TRIPLE | TRIPLE SOLENOID VALVE | 12023921 | | | | 1 | 1 | 1 | 1 | 1 | 1 | 1 | 1 | 1 | 1 | 1 | 1 | 1 | | |
| 19 | REGULADOR VERDE | GREEN REGULATOR | P443042000 | 2 | 2 | 2 | 2 | 2 | 2 | 2 | 2 | 2 | 2 | 2 | 2 | 2 | 2 | 2 | 2 | 11.11.13 | |
| 19 | REGULADOR 3L BELTZA 254.023 | BLACK REGULATOR 254.023 | 12097038 | 2 | 2 | 2 | 2 | 2 | 2 | 2 | 2 | 2 | 2 | 2 | 2 | 2 | 2 | 2 | 2 | | 11.11.13 |
| 20 | PRENSA ESTOPA DOSIFICACION | DISPENSER STUFFING BOX | R073004000 | 1 | 1 | 1 | 1 | 1 | 1 | 1 | 1 | 1 | 1 | 1 | 1 | 1 | 1 | 1 | 1 | | |
| 21 | PRENSA ESTOPA PG-21 | STUFFING BOX PG-21 | R023013000 | 1 | 1 | 1 | 1 | 1 | 1 | 1 | 1 | 1 | 1 | 1 | 1 | 1 | 1 | 1 | 1 | | |
| 22 | JUNTA GOMA | RUBBER SEAL | R023026000 | 1 | 1 | 1 | 1 | 1 | 1 | 1 | 1 | 1 | 1 | 1 | 1 | 1 | 1 | 1 | 1 | | |
| 23 | TUERCA ROSCA Pg 21 | SCREW THREAD Pg 21 | Q223016000 | 1 | 1 | 1 | 1 | 1 | 1 | 1 | 1 | 1 | 1 | 1 | 1 | 1 | 1 | 1 | 1 | 18,10,13 | |
| 23 | CONTRATUERCA (GAES) | LOCKNUT (GAES) | 12010063 | 1 | 1 | 1 | 1 | 1 | 1 | 1 | 1 | 1 | 1 | 1 | 1 | 1 | 1 | 1 | 1 | | 18,10,13 |
| 24 | TAPA CONEXIONES | CONNECTIONS COVER | 12001580 | | 1 | 1 | | 1 | 1 | | 1 | | 1 | 1 | | 1 | 1 | | 1 | | |
| | | | 12001581 | 1 | | | 1 | | | 1 | | 1 | | | 1 | | | 1 | | | |
| 25 | PLACA ENTRADAS-SALIDAS | INLET-OUTLET PLATE | 12024457 | 1 | 1 | 1 | | | | | | 1 | 1 | 1 | | | | | | | |
| | | | 12024197 | | | | 1 | 1 | 1 | 1 | 1 | | | | 1 | 1 | 1 | 1 | 1 | | |
| 26 | VISUALIZADOR | VIEWER | 12023357 | 1 | 1 | 1 | | | | | | 1 | 1 | 1 | | | | | | | |
| | | | 12024780 | | | | 1 | 1 | 1 | 1 | 1 | | | | 1 | 1 | 1 | 1 | 1 | | |
| 27 | INTERRUPTOR GENERAL | POWER SWITCH | 12024634 | 1 | 1 | 1 | 1 | 1 | 1 | | | 1 | 1 | 1 | 1 | 1 | 1 | | | | |
| 27 | CABLEADO CONECTOR PUENTE | WIRING CONNECTOR BRIDGE | 12025206 | 1 | 1 | 1 | 1 | 1 | 1 | 1 | 1 | 1 | 1 | 1 | 1 | 1 | 1 | 1 | 1 | | |
| 28 | CIERRE COMPLETO | COMPLETE LOCK | 12003913 | 1 | 1 | 1 | 1 | 1 | 1 | 1 | 1 | 1 | 1 | 1 | 1 | 1 | 1 | 1 | 1 | | |

| CUADRO ELECTRICO / ELECTRIC PANEL | | | | | | | | | | | | | | | | | | | | | | | |
|---|---|---|---|---|---|---|---|---|---|---|---|---|---|---|---|---|---|---|---|---|---|---|---|
| ITEM | DENOMINACION | NAME | CODIGO | LR-25 | | | | | | | | LA-25 | | | | | | | | ELIMINADO ELIMINATED | INTRODUCIDO INTRODUCED |
| | | | | MP | | | M | | | MA | | MP | | | M | | | MA | | | |
| | CALENTAMIENTO | | | E | AC | V | E | AC | V | E | AC | E | AC | V | E | AC | V | E | AC | | |
| 29 | INSTALACION GENERAL | GENERAL INSTALLATION | 12023366 | 1 | 1 | 1 | 1 | 1 | 1 | 1 | 1 | 1 | 1 | 1 | 1 | 1 | 1 | 1 | 1 | | |
| 30 | CABLE CALENTAMIENTO | HEATING CABLE | 12007781 | 1 | | | 1 | | | 1 | | 1 | | | 1 | | | 1 | | | |
| | | | 12025067 | | | 1 | | | 1 | | | | | 1 | | | 1 | | | | |
| | | | 12040999 | | | | | | | | | | 1 | | | 1 | | | | | |
| 31 | CABLE COMUNICACION | COMMUNICATION CABLE | 12025136 | 1 | 1 | 1 | | | | | | 1 | 1 | 1 | | | | | | | |
| | | | 12023293 | | | | 1 | 1 | 1 | 1 | 1 | | | | 1 | 1 | 1 | 1 | 1 | | |
| 32 | PLC PROGRAMADO 3KW | PLC PROGRAMMED 3KW | 12043487 | 1 | 1 | 1 | 1 | 1 | 1 | 1 | 1 | | | | | | | | | | |
| 32 | PLC PROGRAMADO 4KW 230V | PLC PROGRAMMED 4KW 230V | 12043489 | 1 | 1 | 1 | 1 | 1 | 1 | 1 | 1 | | | | | | | | | | |
| 32 | PLC PROGRAMADO 4KW 400V | PLC PROGRAMMED 4KW 400V | 12043488 | 1 | 1 | 1 | 1 | 1 | 1 | 1 | 1 | | | | | | | | | | |
| 32 | PLC PROGRAMADO 3KW | PLC PROGRAMMED 3KW | 12041245 | | | | | | | | | 1 | 1 | 1 | 1 | 1 | 1 | 1 | 1 | | |
| 32 | PLC PROGRAMADO 4KW 230V | PLC PROGRAMMED 4KW 230V | 12041247 | | | | | | | | | 1 | 1 | 1 | 1 | 1 | 1 | 1 | 1 | | |
| 32 | PLC PROGRAMADO 4KW 400V | PLC PROGRAMMED 4KW 400V | 12041246 | | | | | | | | | 1 | 1 | 1 | 1 | 1 | 1 | 1 | 1 | | |

| VARIOS / VARIOUS | | | | | | | | | | | | | | | | | | | | ELIMINADO ELIMINATED | INTRODUCIDO INTRODUCED |
|---|---|---|---|---|---|---|---|---|---|---|---|---|---|---|---|---|---|---|---|---|---|
| ITEM | DENOMINACION | NAME | CODIGO | LR-18 | | | | | | | | LA-18 | | | | | | | | | |
| | | | | MP | | | M | | | MA | | MP | | | M | | | MA | | | |
| | CALENTAMIENTO | | | E | AC | V | E | AC | V | E | AC | E | AC | V | E | AC | V | E | AC | | |
| | CABLEADO INTERRUP-GENER. | SWITCH WIRING-GENERAL | 12025118 | 1 | 1 | 1 | 1 | 1 | 1 | | | 1 | 1 | 1 | 1 | 1 | 1 | | | | |
| | CABLE. PTC+PUENTE RECTIFIC. | PTC + WIRING BRIDGE-RECTIF. | 12025061 | 1 | 1 | 1 | 1 | 1 | 1 | 1 | 1 | 1 | 1 | 1 | 1 | 1 | 1 | 1 | 1 | | |
| | CABLEADO RESISTENCIA | WIRING RESISTANCE L-8, 13 | 12024944 | 1 | | | 1 | | | 1 | | 1 | | | 1 | | | 1 | | | |
| | CABLEADO TECLADO-SIMPLE | WIRED KEYBOARD-SIMPLE | 12023293 | | | | 1 | 1 | 1 | 1 | 1 | | | | 1 | 1 | 1 | 1 | 1 | | |
| | CABLEADO TRANS.SIN NEUTRO | NO NEUTRAL WIRE TRANSFOR. | 12025104 | | | | 1 | | | | | | | | | | | | | | |
| | CABLEADO ARRASTRE-AC | TRAILING WIRING-AC | 12025082 | | 1 | | | 1 | | | 1 | | 1 | | | 1 | | | 1 | | |
| | CABLE. ELECTR. VALV.VAPOR | WIRING ELECTROVALV.VAPOR | 12025067 | | | 1 | | | 1 | | | | | 1 | | | 1 | | | | |
| | CABL. CONECTOR-PUENTE-LIM | WIRING CONN.-BRIDGE-POWER | 12025206 | | | | | | | 1 | 1 | | | | | | | 1 | 1 | | |
| | CABLEADO MONEDERO C.P. | WIRED PURSE C.P | 12009766 | | | | | | | 1 | 1 | | | | | | | 1 | 1 | 01.01.13 | |
| | CABLEADO MONEDERO C.P. | WIRED PURSE C.P | 12047190 | | | | | | | 1 | 1 | | | | | | | 1 | 1 | | 01.01.13 |
| | CABLEADO PROG.MP | PROGRAMMED WIRING MP | 12025136 | 1 | 1 | 1 | | | | | | 1 | 1 | 1 | | | | | | | |
| | CABLEADO AGUA-CALIENTE | HOT WATER WIRING 8/13/18 | 12024818 | | | | | | | | | | 1 | | | 1 | | | 1 | | |
| | CABLEADO LIMITADOR | LIMITER WIRING | 12024184 | 1 | 1 | 1 | 1 | 1 | 1 | | | | | | | | | | | | |

| VARIOS / VARIOUS | | | | | | | | | | | | | | | | | | | | ELIMINADO ELIMINATED | INTRODUCIDO INTRODUCED |
|---|---|---|---|---|---|---|---|---|---|---|---|---|---|---|---|---|---|---|---|---|---|
| ITEM | DENOMINACION | NAME | CODIGO | LR-25 | | | | | | | | LA-25 | | | | | | | | | |
| | | | | MP | | | M | | | MA | | MP | | | M | | | MA | | | |
| | CALENTAMIENTO | | | E | AC | V | E | AC | V | E | AC | E | AC | V | E | AC | V | E | AC | | |
| | CABLEADO INTERRUP-GENER. | SWITCH WIRING-GENERAL | 12025118 | 1 | 1 | 1 | 1 | 1 | 1 | | | 1 | 1 | 1 | 1 | 1 | 1 | | | | |
| | CABLE. PTC+PUENTE RECTIFIC. | PTC + WIRING BRIDGE-RECTIF. | 12025061 | 1 | 1 | 1 | 1 | 1 | 1 | 1 | 1 | 1 | 1 | 1 | 1 | 1 | 1 | 1 | 1 | | |
| | CABLEADO RESISTENCIA | WIRING RESISTANCE | 12040999 | | | | | | | | | | 1 | | | 1 | | | | | |
| | | | 12007781 | 1 | | | 1 | | | 1 | | 1 | | | 1 | | | 1 | | | |
| | CABLEADO TECLADO-SIMPLE | WIRED KEYBOARD-SIMPLE | 12023293 | | | | 1 | 1 | 1 | 1 | 1 | | | | 1 | 1 | 1 | 1 | 1 | | |
| | CABLEADO TRANS.SIN NEUTRO | NO NEUTRAL WIRE TRANSFOR. | 12025104 | | | | 1 | | | | | | | | | | | | | | |
| | CABLE. ELECTR. VALV.VAPOR | WIRING ELECTROVALV.VAPOR | 12025067 | | | 1 | | | 1 | | | | | 1 | | | 1 | | | | |
| | CABL. CONECTOR-PUENTE-LIM | WIRING CONN.-BRIDGE-POWER | 12025206 | 1 | 1 | 1 | 1 | 1 | 1 | 1 | 1 | 1 | 1 | 1 | 1 | 1 | 1 | 1 | 1 | | 01,02,12 |
| | CABLEADO MONEDERO C.P. | WIRED PURSE C.P | 12009766 | | | | | | | 1 | 1 | | | | | | | 1 | 1 | 01.01.13 | |
| | CABLEADO MONEDERO C.P. | WIRED PURSE C.P | 12047190 | | | | | | | 1 | 1 | | | | | | | 1 | 1 | | 01.01.13 |
| | CABLEADO PROG.MP | PROGRAMMED WIRING MP | 12025136 | 1 | 1 | 1 | | | | | | 1 | 1 | 1 | | | | | | | |
| | CABLEADO LIMITADOR | LIMITER WIRING | 12024184 | 1 | 1 | 1 | 1 | 1 | 1 | | | | | | | | | | | | 06,03,12 |

# *REPUESTOS RECOMENDADOS-RECOMMENDED SPARE PARTS-PIECES RECOMMANDEES*

| ***MODELO MAQUINA: MODEL MACHINE MACHINE MODELE:*** | ***LA- 18 M E*** |
|---|---|

| *REFERENCIA REFERENCE REFERENCE* | *DENOMINACION* | *DENOMINATION* | *DENOMINATION* | *CANTIDAD QUANTITY QUANTITÉ* |
|---|---|---|---|---|
| P635906 | MOTOR LA-18 230/400 V 50 HZ | MOTOR LA-18 230/400 V 50 HZ | MOTEUR LA-18 230/400 V 50 HZ | 1 |
| P635902 | CORREA PARA LA-18 | BELT FOR LA-18 | CORRIE POUR LA-18 | 1 |
| 12038446 | CIERRE PUERTA COMPLETO | COMPLETE LOCKING DOOR | FERMETURE DE PORTE COMPL. | 1 |
| 12025061 | PTC DEL CIERRE | PTC FOR LOCKING DEVICE | PTC PER FERMETURE PORTE | 1 |
| 12024404 | VALVULA DE VACIADO | DRAIN VALVE | VANNE DE VIDANGE | 1 |
| 12023921 | ELECTROVALVULA TRIPLE | TRIPLE ELECTROVALVE | ELECTROVANNE TRIPLE | 1 |
| 12023794 | ELECTROVALVULA DOBLE | DOUBLE ELECTROVALVE | ELECTROVANNE DOUBLE | 1 |
| 12025161 | ELECTROVALVULA SIMPLE | SIMPLE ELECTROVALVE | ELECTROVANNE SIMPLE | 2 |
| 12024634 | INTERRUPTOR ON-OFF | ON-OFF SWITCH | ON-OFF SWITCH | 1 |
| 12024040 | CONTACTOR 230 V CALENTAMIENTO | HEATING CONTACTOR 230V | CHAUFFAGE CONTACTEUR 230V | 2 |
| P503025 | TERMOSTATO | THERMOSTAT | THERMOSTAT | 1 |
| 12024333 | CARTUCHO FUSIBLE 4A | FUSE 4A | FUSSE 4A | 2 |
| 12024780 | VISUALIZADOR M | DISPLAY M | DISPLAY M | 1 |
| 12007722 | ADHESIVO TECLADO M | M ADHESIVE KEYBOARD | ADHESIF POUR CLAVIER M | 1 |
| 12024197 | PLACA ENTRADAS-SALIDAS M | INLET-OUTLET CARD M | ENTRE-SORTIE CARD M | 1 |
| P623028 | TRANSFORMADOR 220/20 VAC | TRANSFORMER 220/20 VAC | TRANSFORMATEUR 220/20 VAC | 1 |
| 12038441 | VARIADOR DE FRECUENCIA LA-18 | SPEED VARIATOR LA-18 | VARIATEUR DE VITESSE LA-18 | 1 |
| 12002437 | PLC PROGRAMADA LA- 18 | LA – 18 PROGRAMMED PLC | LA – 18 PROGRAMMÉ PLC | 3 |
| Z203062 | RELÉ VARIADOR FRECUENCIA CVF | SPEED VARIATOR RELAY CVF | RELAY VARIATEUR CVF | 1 |
| 12024628 | SECCIONADOR PARA 380VIII + N | 3 PHASE CIRCUIT BRAKER | DISJONCTEUR TRIPHASÉ | 1 |
| 12023242 | RESISTENCIA 4000W-230V | HEATING ELEMENT 4000W | RESÍSTENCE 4000W-230V | 3 |
| P620115 | AMORTIGUADOR | SHOCK ABSORBER | AMORTISSEUR | 8 |

- Este documento es valido para las máquinas fabricadas a partir de Marzo del 2013. Fagor Industrial se reserva el derecho de realizar modificaciones con el fin de mejorar el producto. En caso de duda, consultar al SAT.
- Ce document est valable pour les machines fabriquées depuis du Mars 2013. Fagor Industrial a le droit de faire des modifications pour améliorer ses produits. En cas de doute, demandez au SAV.
- This document is valid for the machines manufactured after March of 2013. Fagor Industrial has the right to do modifications for improving the product. If you have any doubt, please, ask our service department.

# *REPUESTOS RECOMENDADOS-RECOMMENDED SPARE PARTS-PIECES RECOMMANDEES*

| ***MODELO MAQUINA: MODEL MACHINE MACHINE MODELE:*** | ***LA- 18 M AC*** |
|---|---|

| *REFERENCIA REFERENCE REFERENCE* | *DENOMINACION* | *DENOMINATION* | *DENOMINATION* | *CANTIDAD QUANTITY QUANTITÉ* |
|---|---|---|---|---|
| P635906 | MOTOR LA-18 230/400 V 50 HZ | MOTOR LA-18 230/400 V 50 HZ | MOTEUR LA-18 230/400 V 50 HZ | 1 |
| P635902 | CORREA PARA LA-18 | BELT FOR LA-18 | CORRIE POUR LA-18 | 1 |
| 12038446 | CIERRE PUERTA COMPLETO | COMPLETE LOCKING DOOR | FERMETURE DE PORTE COMPL. | 1 |
| 12025061 | PTC DEL CIERRE | PTC FOR LOCKING DEVICE | PTC PER FERMETURE PORTE | 1 |
| 12024404 | VALVULA DE VACIADO | DRAIN VALVE | VANNE DE VIDANGE | 1 |
| 12023921 | ELECTROVALVULA TRIPLE | TRIPLE ELECTROVALVE | ELECTROVANNE TRIPLE | 1 |
| 12023794 | ELECTROVALVULA DOBLE | DOUBLE ELECTROVALVE | ELECTROVANNE DOUBLE | 1 |
| 12024634 | INTERRUPTOR ON-OFF | ON-OFF SWITCH | ON-OFF SWITCH | 1 |
| 12024039 | CONTACTOR 230 V CALENTAMIENTO | HEATING CONTACTOR 230V | CHAUFFAGE CONTACTEUR 230V | 1 |
| P503025 | TERMOSTATO | THERMOSTAT | THERMOSTAT | 1 |
| 12024333 | CARTUCHO FUSIBLE 4A | FUSE 4A | FUSSE 4A | 2 |
| 12024780 | VISUALIZADOR M | DISPLAY M | DISPLAY M | 1 |
| 12007722 | ADHESIVO TECLADO M | M ADHESIVE KEYBOARD | ADHESIF POUR CLAVIER M | 1 |
| 12024197 | PLACA ENTRADAS-SALIDAS M | INLET-OUTLET CARD M | ENTRE-SORTIE CARD M | 1 |
| P623028 | TRANSFORMADOR 220/20 VAC | TRANSFORMER 220/20 VAC | TRANSFORMATEUR 220/20 VAC | 1 |
| 12038441 | VARIADOR DE FRECUENCIA LA-18 | SPEED VARIATOR LA-18 | VARIATEUR DE VITESSE LA-18 | 1 |
| 12002437 | PLC PROGRAMADA LA- 18 | LA – 18 PROGRAMMED PLC | LA – 18 PROGRAMMÉ PLC | 3 |
| Z203062 | RELÉ VARIADOR FRECUENCIA CVF | SPEED VARIATOR RELAY CVF | RELAY VARIATEUR CVF | 1 |
| 12024858 | SECCIONADOR PARA 380VIII + N | 3 PHASE CIRCUIT BRAKER | DISJONCTEUR TRIPHASÉ | 1 |
| 12023242 | RESISTENCIA 4000W-230V | HEATING ELEMENT 4000W | RESÍSTENCE 4000W-230V | 3 |
| P620115 | AMORTIGUADOR | SHOCK ABSORBER | AMORTISSEUR | 8 |

- Este documento es valido para las máquinas fabricadas a partir de Marzo del 2013. Fagor Industrial se reserva el derecho de realizar modificaciones con el fin de mejorar el producto. En caso de duda, consultar al SAT.
- Ce document est valable pour les machines fabriquées depuis du Mars 2013. Fagor Industrial a le droit de faire des modifications pour améliorer ses produits. En cas de doute, demandez au SAV.
- This document is valid for the machines manufactured after March of 2013. Fagor Industrial has the right to do modifications for improving the product. If you have any doubt, please, ask our service department.

# *REPUESTOS RECOMENDADOS-RECOMMENDED SPARE PARTS-PIECES RECOMMANDEES*

| ***MODELO MAQUINA: MODEL MACHINE MACHINE MODELE:*** | ***LA- 18 M V*** |
|---|---|

| *REFERENCIA REFERENCE REFERENCE* | *DENOMINACION* | *DENOMINATION* | *DENOMINATION* | *CANTIDAD QUANTITY QUANTITÉ* |
|---|---|---|---|---|
| P635906 | MOTOR LA-18 230/400 V 50 HZ | MOTOR LA-18 230/400 V 50 HZ | MOTEUR LA-18 230/400 V 50 HZ | 1 |
| P635902 | CORREA PARA LA-18 | BELT FOR LA-18 | CORRIE POUR LA-18 | 1 |
| 12038446 | CIERRE PUERTA COMPLETO | COMPLETE LOCKING DOOR | FERMETURE DE PORTE COMPL. | 1 |
| 12025061 | PTC DEL CIERRE | PTC FOR LOCKING DEVICE | PTC PER FERMETURE PORTE | 1 |
| 12024404 | VALVULA DE VACIADO | DRAIN VALVE | VANNE DE VIDANGE | 1 |
| 12023921 | ELECTROVALVULA TRIPLE | TRIPLE ELECTROVALVE | ELECTROVANNE TRIPLE | 1 |
| 12023794 | ELECTROVALVULA DOBLE | DOUBLE ELECTROVALVE | ELECTROVANNE DOUBLE | 1 |
| 12025161 | ELECTROVALVULA SIMPLE | SIMPLE ELECTROVALVE | ELECTROVANNE SIMPLE | 2 |
| 12024634 | INTERRUPTOR ON-OFF | ON-OFF SWITCH | ON-OFF SWITCH | 1 |
| P503025 | TERMOSTATO | THERMOSTAT | THERMOSTAT | 1 |
| 12024333 | CARTUCHO FUSIBLE 4A | FUSE 4A | FUSSE 4A | 2 |
| 12024780 | VISUALIZADOR M | DISPLAY M | DISPLAY M | 1 |
| 12007722 | ADHESIVO TECLADO M | M ADHESIVE KEYBOARD | ADHESIF POUR CLAVIER M | 1 |
| 12024197 | PLACA ENTRADAS-SALIDAS M | INLET-OUTLET CARD M | ENTRE-SORTIE CARD M | 1 |
| P623028 | TRANSFORMADOR 220/20 VAC | TRANSFORMER 220/20 VAC | TRANSFORMATEUR 220/20 VAC | 1 |
| 12038441 | VARIADOR DE FRECUENCIA LA-18 | SPEED VARIATOR LA-18 | VARIATEUR DE VITESSE LA-18 | 1 |
| 12002437 | PLC PROGRAMADA LA- 18 | LA – 18 PROGRAMMED PLC | LA – 18 PROGRAMMÉ PLC | 3 |
| Z203062 | RELÉ VARIADOR FRECUENCIA CVF | SPEED VARIATOR RELAY CVF | RELAY VARIATEUR CVF | 1 |
| 12024858 | SECCIONADOR PARA 380VIII + N | 3 PHASE CIRCUIT BRAKER | DISJONCTEUR TRIPHASÉ | 1 |
| P615003 | ELECTROVALVULA VAPOR ½ “ | STEAM VALVE ½ “ | VANNE DU VAPEUR ½ “ | 1 |
| P620115 | AMORTIGUADOR | SHOCK ABSORBER | AMORTISSEUR | 4 |

- Este documento es valido para las máquinas fabricadas a partir de Marzo del 2013. Fagor Industrial se reserva el derecho de realizar modificaciones con el fin de mejorar el producto. En caso de duda, consultar al SAT.
- Ce document est valable pour les machines fabriquées depuis du Mars 2013. Fagor Industrial a le droit de faire des modifications pour améliorer ses produits. En cas de doute, demandez au SAV.
- This document is valid for the machines manufactured after March of 2013. Fagor Industrial has the right to do modifications for improving the product. If you have any doubt, please, ask our service department.

# *REPUESTOS RECOMENDADOS-RECOMMENDED SPARE PARTS-PIECES RECOMMANDEES*

| *MODELO MAQUINA: MODEL MACHINE MACHINE MODELE:* | ***LA- 18 MP E*** |
|---|---|

| *REFERENCIA REFERENCE REFERENCE* | *DENOMINACION* | *DENOMINATION* | *DENOMINATION* | *CANTIDAD QUANTITY QUANTITÉ* |
|---|---|---|---|---|
| P635906 | MOTOR LA-18 230/400 V 50 HZ | MOTOR LA-18 230/400 V 50 HZ | MOTEUR LA-18 230/400 V 50 HZ | 1 |
| P635902 | CORREA PARA LA-18 | BELT FOR LA-18 | CORRIE POUR LA-18 | 1 |
| 12038446 | CIERRE PUERTA COMPLETO | COMPLETE LOCKING DOOR | FERMETURE DE PORTE COMPL. | 1 |
| 12025061 | PTC DEL CIERRE | PTC FOR LOCKING DEVICE | PTC PER FERMETURE PORTE | 1 |
| 12024404 | VALVULA DE VACIADO | DRAIN VALVE | VANNE DE VIDANGE | 1 |
| 12023921 | ELECTROVALVULA TRIPLE | TRIPLE ELECTROVALVE | ELECTROVANNE TRIPLE | 1 |
| 12023794 | ELECTROVALVULA DOBLE | DOUBLE ELECTROVALVE | ELECTROVANNE DOUBLE | 1 |
| 12025161 | ELECTROVALVULA SIMPLE | SIMPLE ELECTROVALVE | ELECTROVANNE SIMPLE | 2 |
| 12024634 | INTERRUPTOR ON-OFF | ON-OFF SWITCH | ON-OFF SWITCH | 1 |
| 12024040 | CONTACTOR 230 V CALENTAMIENTO | HEATING CONTACTOR 230V | CHAUFFAGE CONTACTEUR 230V | 2 |
| P503025 | TERMOSTATO | THERMOSTAT | THERMOSTAT | 1 |
| 12024333 | CARTUCHO FUSIBLE 4A | FUSE 4A | FUSSE 4A | 2 |
| 12023357 | VISUALIZADOR MP | DISPLAY MP | DISPLAY MP | 1 |
| 12007721 | ADHESIVO TECLADO MP | MP ADHESIVE KEYBOARD | ADHESIF POUR CLAVIER MP | 1 |
| 12024457 | PLACA ENTRADAS-SALIDAS MP | INLET-OUTLET CARD MP | ENTRE-SORTIE CARD MP | 1 |
| P623028 | TRANSFORMADOR 220/20 VAC | TRANSFORMER 220/20 VAC | TRANSFORMATEUR 220/20 VAC | 1 |
| 12038441 | VARIADOR DE FRECUENCIA LA-18 | SPEED VARIATOR LA-18 | VARIATEUR DE VITESSE LA-18 | 1 |
| 12002437 | PLC PROGRAMADA LA- 18 | LA – 18 PROGRAMMED PLC | LA – 18 PROGRAMMÉ PLC | 3 |
| Z203062 | RELÉ VARIADOR FRECUENCIA CVF | SPEED VARIATOR RELAY CVF | RELAY VARIATEUR CVF | 1 |
| 12024628 | SECCIONADOR PARA 380VIII + N | 3 PHASE CIRCUIT BRAKER | DISJONCTEUR TRIPHASÉ | 1 |
| 12023242 | RESISTENCIA 4000W-230V | HEATING ELEMENT 4000W | RESÍSTENCE 4000W-230V | 3 |
| P620115 | AMORTIGUADOR | SHOCK ABSORBER | AMORTISSEUR | 8 |

- Este documento es valido para las máquinas fabricadas a partir de Marzo del 2013. Fagor Industrial se reserva el derecho de realizar modificaciones con el fin de mejorar el producto. En caso de duda, consultar al SAT.
- Ce document est valable pour les machines fabriquées depuis du Mars 2013. Fagor Industrial a le droit de faire des modifications pour améliorer ses produits. En cas de doute, demandez au SAV.
- This document is valid for the machines manufactured after March of 2013. Fagor Industrial has the right to do modifications for improving the product. If you have any doubt, please, ask our service department.

# *REPUESTOS RECOMENDADOS-RECOMMENDED SPARE PARTS-PIECES RECOMMANDEES*

| ***MODELO MAQUINA: MODEL MACHINE MACHINE MODELE:*** | ***LA- 18 MP AC*** |
|---|---|

| *REFERENCIA REFERENCE REFERENCE* | *DENOMINACION* | *DENOMINATION* | *DENOMINATION* | *CANTIDAD QUANTITY QUANTITÉ* |
|---|---|---|---|---|
| P635906 | MOTOR LA-18 230/400 V 50 HZ | MOTOR LA-18 230/400 V 50 HZ | MOTEUR LA-18 230/400 V 50 HZ | 1 |
| P635902 | CORREA PARA LA-18 | BELT FOR LA-18 | CORRIE POUR LA-18 | 1 |
| 12038446 | CIERRE PUERTA COMPLETO | COMPLETE LOCKING DOOR | FERMETURE DE PORTE COMPL. | 1 |
| 12025061 | PTC DEL CIERRE | PTC FOR LOCKING DEVICE | PTC PER FERMETURE PORTE | 1 |
| 12024404 | VALVULA DE VACIADO | DRAIN VALVE | VANNE DE VIDANGE | 1 |
| 12023921 | ELECTROVALVULA TRIPLE | TRIPLE ELECTROVALVE | ELECTROVANNE TRIPLE | 1 |
| 12023794 | ELECTROVALVULA DOBLE | DOUBLE ELECTROVALVE | ELECTROVANNE DOUBLE | 1 |
| 12025161 | ELECTROVALVULA SIMPLE | SIMPLE ELECTROVALVE | ELECTROVANNE SIMPLE | 2 |
| 12024634 | INTERRUPTOR ON-OFF | ON-OFF SWITCH | ON-OFF SWITCH | 1 |
| 12024039 | CONTACTOR 230 V CALENTAMIENTO | HEATING CONTACTOR 230V | CHAUFFAGE CONTACTEUR 230V | 1 |
| P503025 | TERMOSTATO | THERMOSTAT | THERMOSTAT | 1 |
| 12024333 | CARTUCHO FUSIBLE 4A | FUSE 4A | FUSSE 4A | 2 |
| 12023357 | VISUALIZADOR MP | DISPLAY MP | DISPLAY MP | 1 |
| 12007721 | ADHESIVO TECLADO MP | MP ADHESIVE KEYBOARD | ADHESIF POUR CLAVIER MP | 1 |
| 12024457 | PLACA ENTRADAS-SALIDAS MP | INLET-OUTLET CARD MP | ENTRE-SORTIE CARD MP | 1 |
| P623028 | TRANSFORMADOR 220/20 VAC | TRANSFORMER 220/20 VAC | TRANSFORMATEUR 220/20 VAC | 1 |
| 12038441 | VARIADOR DE FRECUENCIA LA-18 | SPEED VARIATOR LA-18 | VARIATEUR DE VITESSE LA-18 | 1 |
| 12002437 | PLC PROGRAMADA LA- 18 | LA – 18 PROGRAMMED PLC | LA – 18 PROGRAMMÉ PLC | 3 |
| Z203062 | RELÉ VARIADOR FRECUENCIA CVF | SPEED VARIATOR RELAY CVF | RELAY VARIATEUR CVF | 1 |
| 12024858 | SECCIONADOR PARA 380VIII + N | 3 PHASE CIRCUIT BRAKER | DISJONCTEUR TRIPHASÉ | 1 |
| 12023242 | RESISTENCIA 4000W-230V | HEATING ELEMENT 4000W | RESÍSTENCE 4000W-230V | 3 |
| P620115 | AMORTIGUADOR | SHOCK ABSORBER | AMORTISSEUR | 8 |

- Este documento es valido para las máquinas fabricadas a partir de Marzo del 2013. Fagor Industrial se reserva el derecho de realizar modificaciones con el fin de mejorar el producto. En caso de duda, consultar al SAT.
- Ce document est valable pour les machines fabriquées depuis du Mars 2013. Fagor Industrial a le droit de faire des modifications pour améliorer ses produits. En cas de doute, demandez au SAV.
- This document is valid for the machines manufactured after March of 2013. Fagor Industrial has the right to do modifications for improving the product. If you have any doubt, please, ask our service department.

# *REPUESTOS RECOMENDADOS-RECOMMENDED SPARE PARTS-PIECES RECOMMANDEES*

| ***MODELO MAQUINA: MODEL MACHINE MACHINE MODELE:*** | ***LA- 18 MP V*** |
|---|---|

| *REFERENCIA REFERENCE REFERENCE* | *DENOMINACION* | *DENOMINATION* | *DENOMINATION* | *CANTIDAD QUANTITY QUANTITÉ* |
|---|---|---|---|---|
| P635906 | MOTOR LA-18 230/400 V 50 HZ | MOTOR LA-18 230/400 V 50 HZ | MOTEUR LA-18 230/400 V 50 HZ | 1 |
| P635902 | CORREA PARA LA-18 | BELT FOR LA-18 | CORRIE POUR LA-18 | 1 |
| 12038446 | CIERRE PUERTA COMPLETO | COMPLETE LOCKING DOOR | FERMETURE DE PORTE COMPL. | 1 |
| 12025061 | PTC DEL CIERRE | PTC FOR LOCKING DEVICE | PTC PER FERMETURE PORTE | 1 |
| 12024404 | VALVULA DE VACIADO | DRAIN VALVE | VANNE DE VIDANGE | 1 |
| 12023921 | ELECTROVALVULA TRIPLE | TRIPLE ELECTROVALVE | ELECTROVANNE TRIPLE | 1 |
| 12023794 | ELECTROVALVULA DOBLE | DOUBLE ELECTROVALVE | ELECTROVANNE DOUBLE | 1 |
| 12025161 | ELECTROVALVULA SIMPLE | SIMPLE ELECTROVALVE | ELECTROVANNE SIMPLE | 2 |
| 12024634 | INTERRUPTOR ON-OFF | ON-OFF SWITCH | ON-OFF SWITCH | 1 |
| P503025 | TERMOSTATO | THERMOSTAT | THERMOSTAT | 1 |
| 12024333 | CARTUCHO FUSIBLE 4A | FUSE 4A | FUSSE 4A | 2 |
| 12023357 | VISUALIZADOR MP | DISPLAY MP | DISPLAY MP | 1 |
| 12007721 | ADHESIVO TECLADO MP | MP ADHESIVE KEYBOARD | ADHESIF POUR CLAVIER MP | 1 |
| 12024457 | PLACA ENTRADAS-SALIDAS MP | INLET-OUTLET CARD MP | ENTRE-SORTIE CARD MP | 1 |
| P623028 | TRANSFORMADOR 220/20 VAC | TRANSFORMER 220/20 VAC | TRANSFORMATEUR 220/20 VAC | 1 |
| 12038441 | VARIADOR DE FRECUENCIA LA-18 | SPEED VARIATOR LA-18 | VARIATEUR DE VITESSE LA-18 | 1 |
| 12002437 | PLC PROGRAMADA LA- 18 | LA – 18 PROGRAMMED PLC | LA – 18 PROGRAMMÉ PLC | 3 |
| Z203062 | RELÉ VARIADOR FRECUENCIA CVF | SPEED VARIATOR RELAY CVF | RELAY VARIATEUR CVF | 1 |
| 12024858 | SECCIONADOR PARA 380VIII + N | 3 PHASE CIRCUIT BRAKER | DISJONCTEUR TRIPHASÉ | 1 |
| P615003 | ELECTROVALVULA VAPOR ½ “ | STEAM VALVE ½ “ | VANNE DU VAPEUR ½ “ | 1 |
| P620115 | AMORTIGUADOR | SHOCK ABSORBER | AMORTISSEUR | 4 |

- Este documento es valido para las máquinas fabricadas a partir de Marzo del 2013. Fagor Industrial se reserva el derecho de realizar modificaciones con el fin de mejorar el producto. En caso de duda, consultar al SAT.
- Ce document est valable pour les machines fabriquées depuis du Mars 2013. Fagor Industrial a le droit de faire des modifications pour améliorer ses produits. En cas de doute, demandez au SAV.
- This document is valid for the machines manufactured after March of 2013. Fagor Industrial has the right to do modifications for improving the product. If you have any doubt, please, ask our service department.

# *REPUESTOS RECOMENDADOS-RECOMMENDED SPARE PARTS-PIECES RECOMMANDEES*

| ***MODELO MAQUINA: MODEL MACHINE*** | ***LA- 25 M E*** |
|---|---|

| *REFERENCIA REFERENCE* | *DENOMINACION* | *DENOMINATION* | *DENOMINATION* | *CANTIDAD QUANTITY* |
|---|---|---|---|---|
| P645902 | MOTOR LA-25 MP PS 230/400 V | MOTOR LA-25 MP PS 230/400 | MOTEUR LA-25 MP PS 230/400 V | 1 |
| P645905 | CORREA | BELT | COURROIE | 3 |
| 12038446 | CIERRE PUERTA COMPLETO | COMPLETE LOCKING DOOR | FERMETURE DE PORTE COMPL. | 1 |
| 12024404 | VALVULA DE VACIADO | DRAIN VALVE | VANNE DE VIDANGE | 1 |
| 12023921 | ELECTROVALVULA TRIPLE | TRIPLE ELECTROVALVE | ELECTROVANNE TRIPLE | 2 |
| 12025161 | ELECTROVALVULA SIMPLE | SIMPLE ELECTROVALVE | ELECTROVANNE SIMPLE | 1 |
| 12023794 | ELECTROVALVULA DOBLE | DOUBLE ELECTROVALVE | ELECTROVANNE DOUBLE | 2 |
| 12024634 | INTERRUPTOR ON-OFF | ON-OFF SWITCH | ON-OFF SWITCH | 1 |
| 12024040 | CONTACTOR 230 V CALENTAMIENTO | HEATING CONTACTOR 230V | CHAUFFAGE CONTACTEUR 230V | 2 |
| P503025 | TERMOSTATO | THERMOSTAT | THERMOSTAT | 1 |
| 12024333 | CARTUCHO FUSIBLE 4A | FUSE 4A | FUSSE 4A | 2 |
| 12024780 | VISUALIZADOR M | DISPLAY M | DISPLAY M | 1 |
| 12024197 | PLACA ENTRADAS-SALIDAS M | INLET-OUTLET CARD M | ENTRE-SORTIE CARTE M | 1 |
| 12007722 | ADHESIVO TECLADO M | ADHESIVE KEYBOARD M | ADHESIF POUR CLAVIER M | 1 |
| P623028 | TRANSFORMADOR 220/20 VAC | TRANSFORMER 220/20 VAC | TRANSFORMATEUR 220/20 VAC | 1 |
| 12043612 | VARIADOR DE FRECUENCIA 3 KW PROGRAMADO | SPEED VARIATOR 3KW PROGRAMMED | VARIATEUR DE VITESSE 3KW PROGRAMMÉ | 1 |
| 12041245 | PLC PROGRAMADA LA-25 | LA-25 PROGRAMMED PLC | LA-25 PROGRAMMÉ PLC | 3 |
| 12024628 | SECCIONADOR 380V-III | 3 PHASE CIRCUIT BRAKER | DISJONCTEUR TRIPHASÉ 380V-III | 1 |
| 12041359 | RESISTENCIA 6000W | HEATING ELEMENT 6000W | RESÍSTENCE 6000W | 3 |
| P630111 | AMORTIGUADOR | SHOCK ABSORBER | AMORTISSEUR | 4 |
| 12024477 | SENSOR MAGNET. DESEQUILIBRIO | BALANCE MAGNETIC SENSOR | EQUILIBRAGE MAGNET. SENSOR | 1 |

- Este documento es valido para las máquinas fabricadas a partir de Marzo del 2013. Fagor Industrial se reserva el derecho de realizar modificaciones con el fin de mejorar el producto. En caso de duda, consultar al SAT.
- Ce document est valable pour les machines fabriquées depuis du Mars 2013. Fagor Industrial a le droit de faire des modifications pour améliorer ses produits. En cas de doute, demandez au SAV.
- This document is valid for the machines manufactured after March of 2013. Fagor Industrial has the right to do modifications for improving the product. If you have any doubt, please, ask our service department.

# *REPUESTOS RECOMENDADOS-RECOMMENDED SPARE PARTS-PIECES RECOMMANDEES*

| ***MODELO MAQUINA: MODEL MACHINE*** | ***LA- 25 M AC*** |
|---|---|

| *REFERENCIA REFERENCE* | *DENOMINACION* | *DENOMINATION* | *DENOMINATION* | *CANTIDAD QUANTITY* |
|---|---|---|---|---|
| P645902 | MOTOR LA-25 MP PS 230/400 V | MOTOR LA-25 MP PS 230/400 | MOTEUR LA-25 MP PS 230/400 V | 1 |
| P645905 | CORREA | BELT | COURROIE | 3 |
| 12038446 | CIERRE PUERTA COMPLETO | COMPLETE LOCKING DOOR | FERMETURE DE PORTE COMPL. | 1 |
| 12024404 | VALVULA DE VACIADO | DRAIN VALVE | VANNE DE VIDANGE | 1 |
| 12023921 | ELECTROVALVULA TRIPLE | TRIPLE ELECTROVALVE | ELECTROVANNE TRIPLE | 2 |
| 12025161 | ELECTROVALVULA SIMPLE | SIMPLE ELECTROVALVE | ELECTROVANNE SIMPLE | 1 |
| 12023794 | ELECTROVALVULA DOBLE | DOUBLE ELECTROVALVE | ELECTROVANNE DOUBLE | 2 |
| 12024634 | INTERRUPTOR ON-OFF | ON-OFF SWITCH | ON-OFF SWITCH | 1 |
| 12024040 | CONTACTOR 230 V CALENTAMIENTO | HEATING CONTACTOR 230V | CHAUFFAGE CONTACTEUR 230V | 1 |
| P503025 | TERMOSTATO | THERMOSTAT | THERMOSTAT | 1 |
| 12024333 | CARTUCHO FUSIBLE 4A | FUSE 4A | FUSSE 4A | 2 |
| 12024780 | VISUALIZADOR M | DISPLAY M | DISPLAY M | 1 |
| 12024197 | PLACA ENTRADAS-SALIDAS M | INLET-OUTLET CARD M | ENTRE-SORTIE CARTE M | 1 |
| 12007722 | ADHESIVO TECLADO M | ADHESIVE KEYBOARD M | ADHESIF POUR CLAVIER M | 1 |
| P623028 | TRANSFORMADOR 220/20 VAC | TRANSFORMER 220/20 VAC | TRANSFORMATEUR 220/20 VAC | 1 |
| 12043612 | VARIADOR DE FRECUENCIA 3 KW PROGRAMADO | SPEED VARIATOR 3KW PROGRAMMED | VARIATEUR DE VITESSE 3KW PROGRAMMÉ | 1 |
| 12041245 | PLC PROGRAMADA LA-25 | LA-25 PROGRAMMED PLC | LA-25 PROGRAMMÉ PLC | 3 |
| 12024858 | SECCIONADOR 380V-III | 3 PHASE CIRCUIT BRAKER | DISJONCTEUR TRIPHASÉ 380V-III | 1 |
| 12024816 | RESISTENCIA 6000W | HEATING ELEMENT 6000W | RESÍSTENCE 6000W | 1 |
| P630111 | AMORTIGUADOR | SHOCK ABSORBER | AMORTISSEUR | 4 |
| 12024477 | SENSOR MAGNET. DESEQUILIBRIO | BALANCE MAGNETIC SENSOR | EQUILIBRAGE MAGNET. SENSOR | 1 |

- Este documento es valido para las máquinas fabricadas a partir de Marzo del 2013. Fagor Industrial se reserva el derecho de realizar modificaciones con el fin de mejorar el producto. En caso de duda, consultar al SAT.
- Ce document est valable pour les machines fabriquées depuis du Mars 2013. Fagor Industrial a le droit de faire des modifications pour améliorer ses produits. En cas de doute, demandez au SAV.
- This document is valid for the machines manufactured after March of 2013. Fagor Industrial has the right to do modifications for improving the product. If you have any doubt, please, ask our service department.

# *REPUESTOS RECOMENDADOS-RECOMMENDED SPARE PARTS-PIECES RECOMMANDEES*

| ***MODELO MAQUINA: MODEL MACHINE*** | ***LA- 25 M V*** |
|---|---|

| *REFERENCIA REFERENCE* | *DENOMINACION* | *DENOMINATION* | *DENOMINATION* | *CANTIDAD QUANTITY* |
|---|---|---|---|---|
| P645902 | MOTOR LA-25 MP PS 230/400 V | MOTOR LA-25 MP PS 230/400 | MOTEUR LA-25 MP PS 230/400 V | 1 |
| P645905 | CORREA | BELT | COURROIE | 3 |
| 12038446 | CIERRE PUERTA COMPLETO | COMPLETE LOCKING DOOR | FERMETURE DE PORTE COMPL. | 1 |
| 12024404 | VALVULA DE VACIADO | DRAIN VALVE | VANNE DE VIDANGE | 1 |
| 12023921 | ELECTROVALVULA TRIPLE | TRIPLE ELECTROVALVE | ELECTROVANNE TRIPLE | 2 |
| 12025161 | ELECTROVALVULA SIMPLE | SIMPLE ELECTROVALVE | ELECTROVANNE SIMPLE | 1 |
| 12023794 | ELECTROVALVULA DOBLE | DOUBLE ELECTROVALVE | ELECTROVANNE DOUBLE | 2 |
| 12024634 | INTERRUPTOR ON-OFF | ON-OFF SWITCH | ON-OFF SWITCH | 1 |
| P503025 | TERMOSTATO | THERMOSTAT | THERMOSTAT | 1 |
| 12024333 | CARTUCHO FUSIBLE 4A | FUSE 4A | FUSSE 4A | 2 |
| 12024780 | VISUALIZADOR M | DISPLAY M | DISPLAY M | 1 |
| 12024197 | PLACA ENTRADAS-SALIDAS M | INLET-OUTLET CARD M | ENTRE-SORTIE CARTE M | 1 |
| 12007722 | ADHESIVO TECLADO M | ADHESIVE KEYBOARD M | ADHESIF POUR CLAVIER M | 1 |
| P623028 | TRANSFORMADOR 220/20 VAC | TRANSFORMER 220/20 VAC | TRANSFORMATEUR 220/20 VAC | 1 |
| 12043612 | VARIADOR DE FRECUENCIA 3 KW PROGRAMADO | SPEED VARIATOR 3KW PROGRAMMED | VARIATEUR DE VITESSE 3KW PROGRAMMÉ | 1 |
| 12041245 | PLC PROGRAMADA LA-25 | LA-25 PROGRAMMED PLC | LA-25 PROGRAMMÉ PLC | 3 |
| 12024628 | SECCIONADOR 380V-III | 3 PHASE CIRCUIT BRAKER | DISJONCTEUR TRIPHASÉ 380V-III | 1 |
| P535023 | ELECTROVALVULA VAPOR ½ “ | STEAM VALVE ½ “ | VANNE DU VAPEUR ½ “ | 1 |
| P630111 | AMORTIGUADOR | SHOCK ABSORBER | AMORTISSEUR | 4 |
| 12024477 | SENSOR MAGNET. DESEQUILIBRIO | BALANCE MAGNETIC SENSOR | EQUILIBRAGE MAGNET. SENSOR | 1 |

- Este documento es valido para las máquinas fabricadas a partir de Marzo del 2013. Fagor Industrial se reserva el derecho de realizar modificaciones con el fin de mejorar el producto. En caso de duda, consultar al SAT.
- Ce document est valable pour les machines fabriquées depuis du Mars 2013. Fagor Industrial a le droit de faire des modifications pour améliorer ses produits. En cas de doute, demandez au SAV.
- This document is valid for the machines manufactured after March of 2013. Fagor Industrial has the right to do modifications for improving the product. If you have any doubt, please, ask our service department.

# *REPUESTOS RECOMENDADOS-RECOMMENDED SPARE PARTS-PIECES RECOMMANDEES*

| ***MODELO MAQUINA: MODEL MACHINE*** | ***LA- 25 MP E*** |
|---|---|

| *REFERENCIA REFERENCE* | *DENOMINACION* | *DENOMINATION* | *DENOMINATION* | *CANTIDAD QUANTITY* |
|---|---|---|---|---|
| P645902 | MOTOR LA-25 MP PS 230/400 V | MOTOR LA-25 MP PS 230/400 | MOTEUR LA-25 MP PS 230/400 V | 1 |
| P645905 | CORREA | BELT | COURROIE | 3 |
| 12038446 | CIERRE PUERTA COMPLETO | COMPLETE LOCKING DOOR | FERMETURE DE PORTE COMPL. | 1 |
| 12024404 | VALVULA DE VACIADO | DRAIN VALVE | VANNE DE VIDANGE | 1 |
| 12023921 | ELECTROVALVULA TRIPLE | TRIPLE ELECTROVALVE | ELECTROVANNE TRIPLE | 2 |
| 12025161 | ELECTROVALVULA SIMPLE | SIMPLE ELECTROVALVE | ELECTROVANNE SIMPLE | 1 |
| 12023794 | ELECTROVALVULA DOBLE | DOUBLE ELECTROVALVE | ELECTROVANNE DOUBLE | 2 |
| 12024634 | INTERRUPTOR ON-OFF | ON-OFF SWITCH | ON-OFF SWITCH | 1 |
| 12024040 | CONTACTOR 230 V CALENTAMIENTO | HEATING CONTACTOR 230V | CHAUFFAGE CONTACTEUR 230V | 2 |
| P503025 | TERMOSTATO | THERMOSTAT | THERMOSTAT | 1 |
| 12024333 | CARTUCHO FUSIBLE 4A | FUSE 4A | FUSSE 4A | 2 |
| 12023357 | VISUALIZADOR MP | DISPLAY MP | DISPLAY MP | 1 |
| 12024457 | PLACA ENTRADAS-SALIDAS MP | INLET-OUTLET CARD MP | ENTRE-SORTIE CARTE MP | 1 |
| 12007721 | ADHESIVO TECLADO MP | ADHESIVE KEYBOARD MP | ADHESIF POUR CLAVIER MP | 1 |
| P623028 | TRANSFORMADOR 220/20 VAC | TRANSFORMER 220/20 VAC | TRANSFORMATEUR 220/20 VAC | 1 |
| 12043612 | VARIADOR DE FRECUENCIA 3 KW PROGRAMADO | SPEED VARIATOR 3KW PROGRAMMED | VARIATEUR DE VITESSE 3KW PROGRAMMÉ | 1 |
| 12041245 | PLC PROGRAMADA LA-25 | LA-25 PROGRAMMED PLC | LA-25 PROGRAMMÉ PLC | 3 |
| 12024628 | SECCIONADOR 380V-III | 3 PHASE CIRCUIT BRAKER | DISJONCTEUR TRIPHASÉ 380V-III | 1 |
| 12041359 | RESISTENCIA 6000W | HEATING ELEMENT 6000W | RESÍSTENCE 6000W | 3 |
| P630111 | AMORTIGUADOR | SHOCK ABSORBER | AMORTISSEUR | 4 |
| 12024477 | SENSOR MAGNET. DESEQUILIBRIO | BALANCE MAGNETIC SENSOR | EQUILIBRAGE MAGNET. SENSOR | 1 |

- Este documento es valido para las máquinas fabricadas a partir de Marzo del 2013. Fagor Industrial se reserva el derecho de realizar modificaciones con el fin de mejorar el producto. En caso de duda, consultar al SAT.
- Ce document est valable pour les machines fabriquées depuis du Mars 2013. Fagor Industrial a le droit de faire des modifications pour améliorer ses produits. En cas de doute, demandez au SAV.
- This document is valid for the machines manufactured after March of 2013. Fagor Industrial has the right to do modifications for improving the product. If you have any doubt, please, ask our service department.

# *REPUESTOS RECOMENDADOS-RECOMMENDED SPARE PARTS-PIECES RECOMMANDEES*

| ***MODELO MAQUINA: MODEL MACHINE*** | ***LA- 25 MP AC*** |
|---|---|

| *REFERENCIA REFERENCE* | *DENOMINACION* | *DENOMINATION* | *DENOMINATION* | *CANTIDAD QUANTITY* |
|---|---|---|---|---|
| P645902 | MOTOR LA-25 MP PS 230/400 V | MOTOR LA-25 MP PS 230/400 | MOTEUR LA-25 MP PS 230/400 V | 1 |
| P645905 | CORREA | BELT | COURROIE | 3 |
| 12038446 | CIERRE PUERTA COMPLETO | COMPLETE LOCKING DOOR | FERMETURE DE PORTE COMPL. | 1 |
| 12024404 | VALVULA DE VACIADO | DRAIN VALVE | VANNE DE VIDANGE | 1 |
| 12023921 | ELECTROVALVULA TRIPLE | TRIPLE ELECTROVALVE | ELECTROVANNE TRIPLE | 2 |
| 12025161 | ELECTROVALVULA SIMPLE | SIMPLE ELECTROVALVE | ELECTROVANNE SIMPLE | 1 |
| 12023794 | ELECTROVALVULA DOBLE | DOUBLE ELECTROVALVE | ELECTROVANNE DOUBLE | 2 |
| 12024634 | INTERRUPTOR ON-OFF | ON-OFF SWITCH | ON-OFF SWITCH | 1 |
| 12024040 | CONTACTOR 230 V CALENTAMIENTO | HEATING CONTACTOR 230V | CHAUFFAGE CONTACTEUR 230V | 1 |
| P503025 | TERMOSTATO | THERMOSTAT | THERMOSTAT | 1 |
| 12024333 | CARTUCHO FUSIBLE 4A | FUSE 4A | FUSSE 4A | 2 |
| 12023357 | VISUALIZADOR MP | DISPLAY MP | DISPLAY MP | 1 |
| 12024457 | PLACA ENTRADAS-SALIDAS MP | INLET-OUTLET CARD MP | ENTRE-SORTIE CARTE MP | 1 |
| 12007721 | ADHESIVO TECLADO MP | ADHESIVE KEYBOARD MP | ADHESIF POUR CLAVIER MP | 1 |
| P623028 | TRANSFORMADOR 220/20 VAC | TRANSFORMER 220/20 VAC | TRANSFORMATEUR 220/20 VAC | 1 |
| 12043612 | VARIADOR DE FRECUENCIA 3 KW PROGRAMADO | SPEED VARIATOR 3KW PROGRAMMED | VARIATEUR DE VITESSE 3KW PROGRAMMÉ | 1 |
| 12041245 | PLC PROGRAMADA LA-25 | LA-25 PROGRAMMED PLC | LA-25 PROGRAMMÉ PLC | 3 |
| 12024858 | SECCIONADOR 380V-III | 3 PHASE CIRCUIT BRAKER | DISJONCTEUR TRIPHASÉ 380V-III | 1 |
| 12024816 | RESISTENCIA 6000W | HEATING ELEMENT 6000W | RESÍSTENCE 6000W | 1 |
| P630111 | AMORTIGUADOR | SHOCK ABSORBER | AMORTISSEUR | 4 |
| 12024477 | SENSOR MAGNET. DESEQUILIBRIO | BALANCE MAGNETIC SENSOR | EQUILIBRAGE MAGNET. SENSOR | 1 |

- Este documento es valido para las máquinas fabricadas a partir de Marzo del 2013. Fagor Industrial se reserva el derecho de realizar modificaciones con el fin de mejorar el producto. En caso de duda, consultar al SAT.
- Ce document est valable pour les machines fabriquées depuis du Mars 2013. Fagor Industrial a le droit de faire des modifications pour améliorer ses produits. En cas de doute, demandez au SAV.
- This document is valid for the machines manufactured after March of 2013. Fagor Industrial has the right to do modifications for improving the product. If you have any doubt, please, ask our service department.

# *REPUESTOS RECOMENDADOS-RECOMMENDED SPARE PARTS-PIECES RECOMMANDEES*

| ***MODELO MAQUINA: MODEL MACHINE*** | ***LA- 25 MP V*** |
|---|---|

| *REFERENCIA REFERENCE* | *DENOMINACION* | *DENOMINATION* | *DENOMINATION* | *CANTIDAD QUANTITY* |
|---|---|---|---|---|
| P645902 | MOTOR LA-25 MP PS 230/400 V | MOTOR LA-25 MP PS 230/400 | MOTEUR LA-25 MP PS 230/400 V | 1 |
| P645905 | CORREA | BELT | COURROIE | 3 |
| 12038446 | CIERRE PUERTA COMPLETO | COMPLETE LOCKING DOOR | FERMETURE DE PORTE COMPL. | 1 |
| 12024404 | VALVULA DE VACIADO | DRAIN VALVE | VANNE DE VIDANGE | 1 |
| 12023921 | ELECTROVALVULA TRIPLE | TRIPLE ELECTROVALVE | ELECTROVANNE TRIPLE | 2 |
| 12025161 | ELECTROVALVULA SIMPLE | SIMPLE ELECTROVALVE | ELECTROVANNE SIMPLE | 1 |
| 12023794 | ELECTROVALVULA DOBLE | DOUBLE ELECTROVALVE | ELECTROVANNE DOUBLE | 2 |
| 12024634 | INTERRUPTOR ON-OFF | ON-OFF SWITCH | ON-OFF SWITCH | 1 |
| P503025 | TERMOSTATO | THERMOSTAT | THERMOSTAT | 1 |
| 12024333 | CARTUCHO FUSIBLE 4A | FUSE 4A | FUSSE 4A | 2 |
| 12023357 | VISUALIZADOR MP | DISPLAY MP | DISPLAY MP | 1 |
| 12024457 | PLACA ENTRADAS-SALIDAS MP | INLET-OUTLET CARD MP | ENTRE-SORTIE CARTE MP | 1 |
| 12007721 | ADHESIVO TECLADO MP | ADHESIVE KEYBOARD MP | ADHESIF POUR CLAVIER MP | 1 |
| P623028 | TRANSFORMADOR 220/20 VAC | TRANSFORMER 220/20 VAC | TRANSFORMATEUR 220/20 VAC | 1 |
| 12043612 | VARIADOR DE FRECUENCIA 3 KW PROGRAMADO | SPEED VARIATOR 3KW PROGRAMMED | VARIATEUR DE VITESSE 3KW PROGRAMMÉ | 1 |
| 12041245 | PLC PROGRAMADA LA-25 | LA-25 PROGRAMMED PLC | LA-25 PROGRAMMÉ PLC | 3 |
| 12024628 | SECCIONADOR 380V-III | 3 PHASE CIRCUIT BRAKER | DISJONCTEUR TRIPHASÉ 380V-III | 1 |
| P535023 | ELECTROVALVULA VAPOR ½ “ | STEAM VALVE ½ “ | VANNE DU VAPEUR ½ “ | 1 |
| P630111 | AMORTIGUADOR | SHOCK ABSORBER | AMORTISSEUR | 4 |
| 12024477 | SENSOR MAGNET. DESEQUILIBRIO | BALANCE MAGNETIC SENSOR | EQUILIBRAGE MAGNET. SENSOR | 1 |

- Este documento es valido para las máquinas fabricadas a partir de Marzo del 2013. Fagor Industrial se reserva el derecho de realizar modificaciones con el fin de mejorar el producto. En caso de duda, consultar al SAT.
- Ce document est valable pour les machines fabriquées depuis du Mars 2013. Fagor Industrial a le droit de faire des modifications pour améliorer ses produits. En cas de doute, demandez au SAV.
- This document is valid for the machines manufactured after March of 2013. Fagor Industrial has the right to do modifications for improving the product. If you have any doubt, please, ask our service department.

LAVAD/E - 10,13,18 MPP, M

LAVAD/V - 10,13,18 MPP, M

LAVAD/AC - 10,13,18 MPP, M

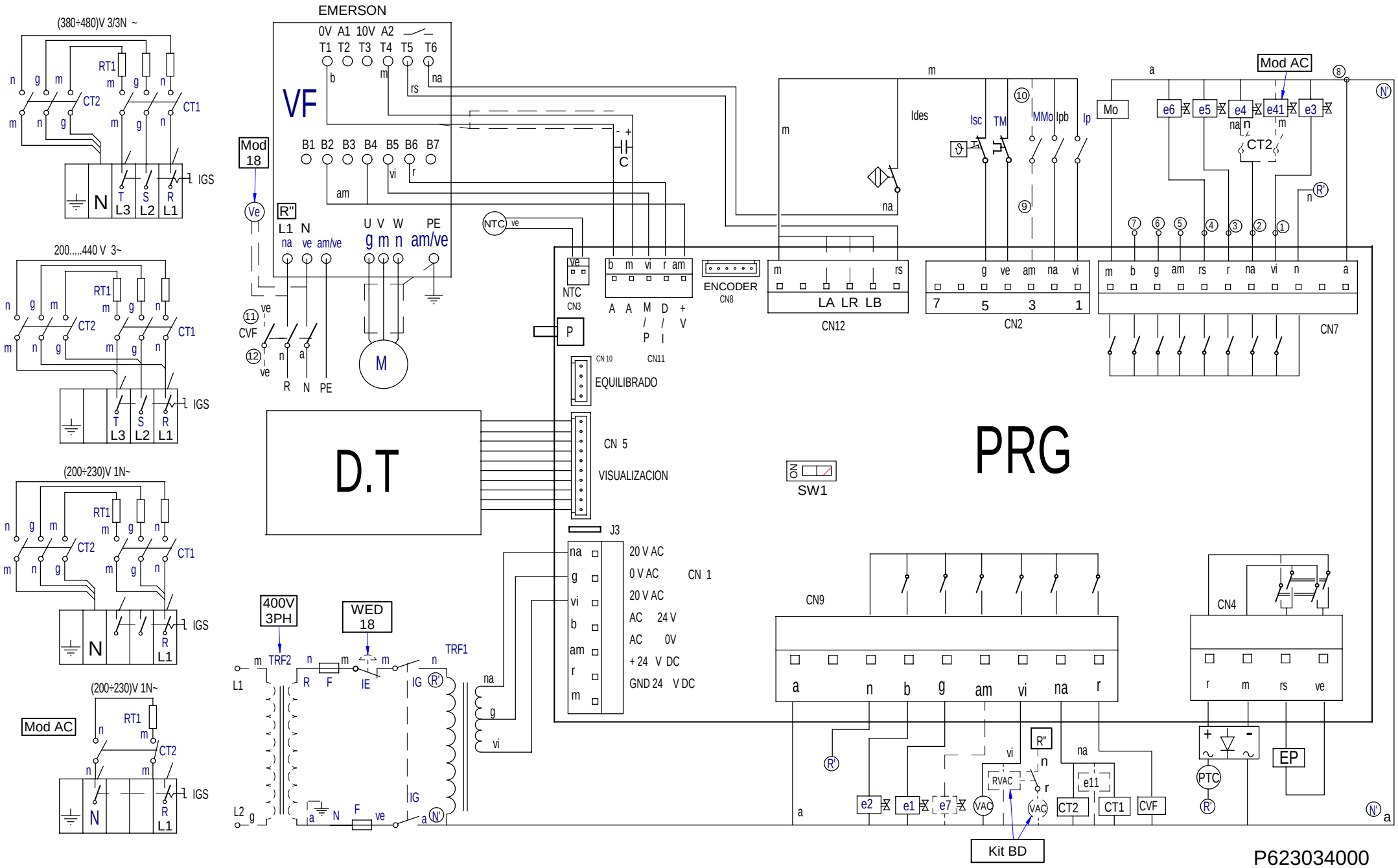

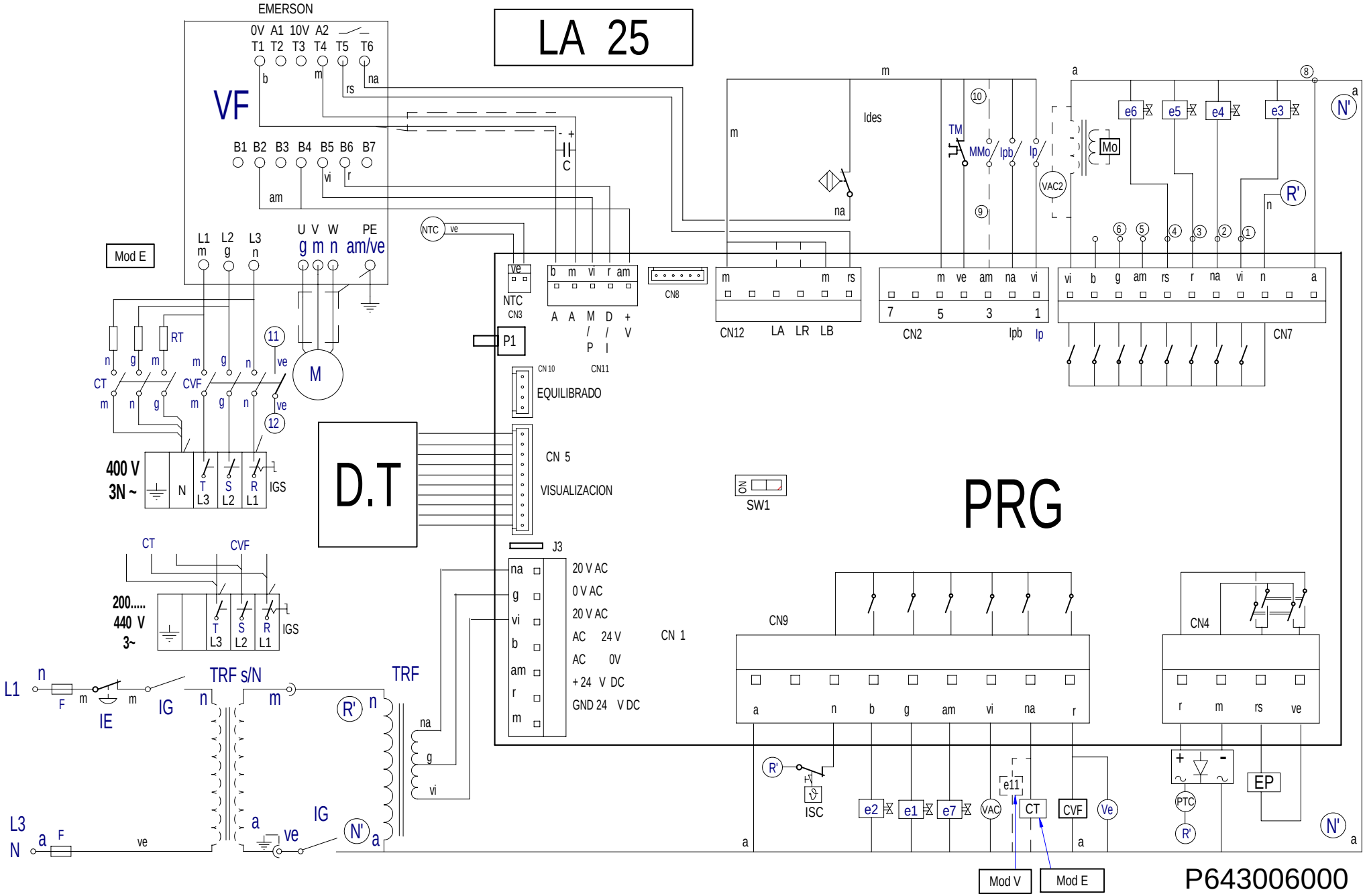
LA 25
EMERSON
VF
0V A1 10V A2
T1 T2 T3 T4 T5 T6
B1 B2 B3 B4 B5 B6 B7
L1 L2 L3
U V W PE
Mod E
RT
CT
CVF
M
400 V
3N ~
IGS
D.T
CN 5
VISUALIZACION
EQUILIBRADO
P1
NTC
CN3
CN8
CN12
CN2
CN7
SW1
PRG
J3
20 V AC
0 V AC
20 V AC
AC 24 V
AC 0V
+ 24 V DC
GND 24 V DC
CN 1
CN9
CN4
200.....
440 V
3~
L1
L3
N
TRF s/N
TRF
IE
IG
F
ISC
EP
PTC
Mod V
Mod E
P643006000

| Simb / LENG | ESPAÑOL | FRANÇAIS | ENGLISH | DEUTSCH | ITALIANO |
|---|---|---|---|---|---|
| CT = | Contactor Calentamiento | Contacteur Chauffe | Heating Contactor | Heizschütz | Contatore Riscaldamento |
| DP = | Detector posición. | Détecteur position | Position detector | Stellung Taster | Rilevatore posizione |
| DS1 | Dosificador Neutralizante. | Doseur Neutralisant | Neutralizer feeder | Dosiervorrichtung Neutralspülmittel | Dosatore Neutralizzante |
| DS2 | Dosificador jabon liquido. | Doseur lessive liquide | Liquid soap feeder | Dosiervorrichtung Flüssigseife | Dosatore sapone liquido |
| DS3 | Dosificador aditivos. | Doseur additifs | Additive feeder | Dosiervorrichtung Zusatzmittel | Dosatore additivi |
| D.T. | Display/Teclado | Écran/Clavier | Display/Keyboard | Display/Tastatur | Display/Tastiera |
| e1 = | Electro válvula agua Fria. | Électrovanne eau Froide | Cold water electrically operated valve | Elektroventil Kaltwasser | Elettrovalvola acqua Fredda |
| e2 = | Electro válvula agua Caliente | Électrovanne eau Chaude | Hot water electrically operated valve | Elektroventil Warmwasser | Elettrovalvola acqua Calda |
| e3 = | Electro válvula Prelavado. | Électrovanne Prélavage | Pre-wash electrically operated valve | Elektroventil Vorwaschen | Elettrovalvola Prelavaggio |
| e4 = | Electro válvula Lavado. | Électrovanne Lavage | Wash electrically operated valve | Elektroventil Hauptwaschgang | Elettrovalvola Lavaggio |
| e5 = | Electro válvula Lejía. | Électrovanne Eau de Javel | Bleach electrically operated valve. | Elektroventil Bleiche | Elettrovalvola Candeggina |
| e6 = | Electro válvula Suavizante. | Électrovanne Assouplissant | Fabric softener electrically operated valve | Elektroventil Weichspüler | Elettrovalvola Ammorbidente |
| e7 = | Electro válvula agua Descalcificada | Électrovanne eau Adoucie | Delimed water electrically operated valve | Elektroventil entkalktes Wasser | Elettrovalvola acqua Decalcificata |
| e8 ,9,10 = | Electro válvula Equilibrado | Électrovanne Équilibrage | Balancer electrically operated valve | Elektroventil Gleichgewicht | Elettrovalvola Bilanciamento |
| e11 = | Electro válvula Vapor. | Électrovanne Vapeur | Steam electrically operated valve | Elektroventil Dampf | Equilibrado Vapore |
| EP = | Electroimán de Puerta. | Électro-aimant de Porte | Door electric magnet | Elektromagnet Gerätetür | Elettromagnete Porta |
| FI = | Filtro de Interferencias. | Filtre Anti-parasites | Interference filter | Störungsfilter | Filtro Interferenze |
| F = | Fusible. | Fusible | Fuse | Sicherung | Fusibile |
| G1,G2 = | Galga Sensor. | Jauge Capteur | Sensing gage | Meßsensor | Calibro Sensore |
| IE = | Pulsador Parada de emergencia. | Bouton-poussoir Arrêt d'urgence | Emergency stop push button | Not-Aus-Taster | Pulsante Arresto di emergenza |
| IG = | Interruptor general. | Interrupteur général | General switch | Hauptschalter | Interruttore generale |
| IGS = | Interruptor General de seguridad. | interrupteur Général de sécurité | General safety switch | Sicherheitshauptschalter | Interruttore Generale di sicurezza |
| Ides = | Interruptor de desequilibrio. | Interrupteur de balourd | Unbalance switch | Ungleichgewichtsschalter | Interruttore di squilibrio |
| IMo = | Interruptor Monedero. | Interrupteur Monnayeur | Coin slote switch | Münzschalter | Interruttore Portamonete |
| Ip = | Interruptor puerta Cerrada. | Interrupteur porte Fermée | Closed door switch | Schalter Tür geschlossen | Interruttore porta Chiusa |
| Ipb = | Interruptor puerta bloqueada. | Interrupteur porte verrouillée | Door lock switch | Schalter Tür verriegelt | Interruttore porta bloccata |
| Isc | Interruptor seguridad Temperatura | Thermostat Limiteur | Hi-limit Thermostat | Grenzthermostat | Termostato Limitatore |
| M = | Motor. | Moteur | Motor | Motor | Motore |
| Mo = | Monedero. | Monnayeur | Coin slot | Münzvorrichtung | Portamonete |
| NTC = | Sensor temperatura.. | Capteur température | Temperature sensor | Temperatursensor | Sensore temperatura |
| RT = | Resistencia Calentamiento. | Résistance Chauffe | Heating Resistors | Widerstand Aufheizung | Resistenza Riscaldamento |
| Tm = | Térmico de Motor. | Thermique du Moteur | Motor hot-wire | Motorwärmeschalter | Termico del Motore |
| Trf = | Transformador | Transformateur | Transformer | Transformator | Trasformatore |
| Trf s/N = | Transformador Versión sin Neutro. | Transformateur Version sans Neutre | Transformer Version without Neutral | Transformator Modell ohne Neutralstellung | Trasformatore Versione senza Neutro |
| VAC = | Válvula Vaciado | Vanne Vidange | Emptying valve | Ablassventil | Valvola Scarico |
| Ve = | Ventilador. | Ventilateur | Fan | Ventilator | Ventola |
| VF = | Convertidor de Frecuencia. | Convertisseur de Fréquence | Frequency converter | Frequenzumwandler | Convertitore di Frequenza |
| VM = | Ventilador Motor. | Ventilateur Moteur | Fan motor | Ventilator Motor | Ventola Motore |
| 1...8 = | Puntos conexión dosificadores. | Points raccordement doseurs | Feeder connection points | Anschlussstellen Dosiervorrichtungen | Punti connessione dosatori |
| **COLOR** | **COLORES** | **COULEURS** | **COLOUR** | **FARBEN** | **COLORE** |
| a = | Azul | Bleu | Blue | Blau | Blu |
| am = | Amarillo | Jaune | Yellow | Gelb | Giallo |
| am/ve = | Amarillo/verde | Jaune / vert | Yellow / green | Gelb/grün | Giallo/verde |
| b = | Blanco | Blanc | White | Weiß | Bianco |
| g = | Gris | Gris | Grey | Grau | Grigio |
| m = | Marrón | Marron | Brown | Braun | Marrone |
| n = | Negro | Noir | Black | Schwarz | Nero |
| na = | Naranja | Orange | Orange | Orange | Arancio |
| r = | Rojo | Rouge | Red | Rot | Rosso |
| rs = | Rosa | Rose | Pink | Rosa | Roseo |
| ve = | Verde | Vert | Green | Grün | Verde |
| vi = | Violeta | Violet | Purple | Violett | Viola |