DESPIECE TECNICO

Cocina de inducción
Induction ranges
Fourneaux induction
Induktion-herde
Cucine induzione
Fogões indução

GAMA 900

Modelos:

CI9-20 PLUS
CI9-40 PLUS

Marzo 01/03/2011 March

Revisado Junio 2013 June Revised

FAGOR

FAGOR INDUSTRIAL

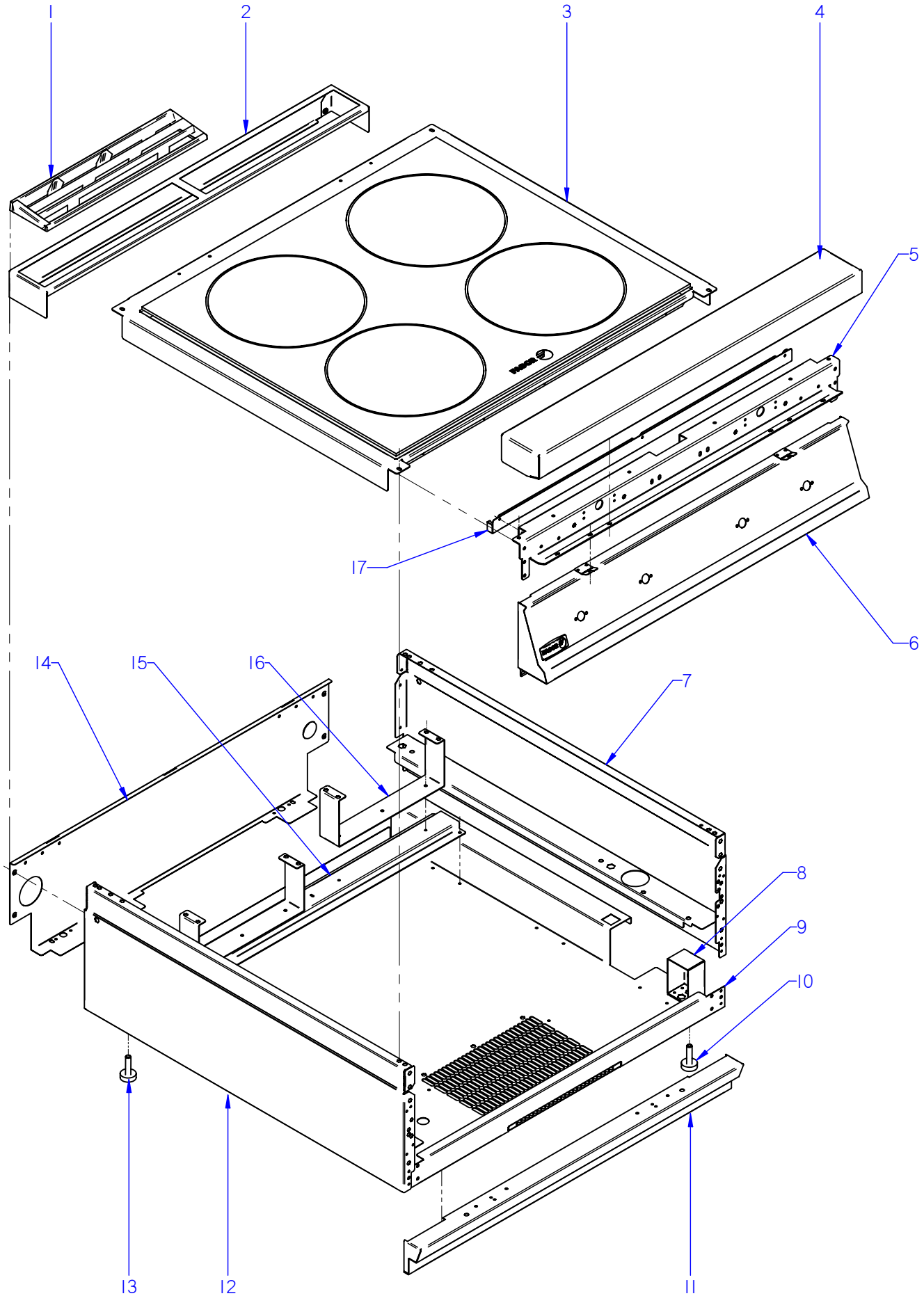

ITEM MARCADO EN COLOR = REPUESTO RECOMENDADO
COLOURED ITEM = RECOMMENDED SPARE PART

Nº plano / N º plane	Firma	Fecha / Date	Denominación / Denomination: MUEBLE / FITTING	Lamina / Sheet
C-2693		2011-03	COCINA / RANGES CI9-20 / CI9-40 PLUS	1

FAGOR
FAGOR INDUSTRIAL

MOD.	COCINAS / RANGES	ZONA / ZONE	MUEBLE / FITTING	PLANO DIAGRAM	C-2693

ITEM	CODIGO REFERENCE	DENOMINACION	DENOMINATION	CI9-20 PLUS	CI9-40 PLUS							ELIMINADO ELIMINATED	INTRODUCID. INTRODUCED	NOTAS
1	R205425000	EMBELLECEDOR ESMALTE	ENAMEL TRIM	1	2									
2	R205438000	SOPORTE EMBELLECEDOR 1/2M	1/2M TRIM SUPPORT	1	_									
2	R205439000	SOPORTE EMBELLECEDOR 1M	TRIM SUPPORT 1M	_	1									
	Q419005000	REMACHE 4X8 ALMG3 / ALUMINIO	RIVET 4X8 ALMG3 / ALUMINIUM	2	2									
3	U175410000	ENCIMERA COMPLETA CI9-20	TOP CI9-20 COMPL.	1	_									
3	U175409000	ENCIMERA COMPLETA CI9-40	TOP CI9-40 COMPL.	_	1							04.09.13		
3	12095134	ENCIMERA COMPLETA CI9-40	TOP CI9-40 COMPL.	_	1								04.09.13	
	Q012032000	TORNILLO EXAGONAL M5x15 A304	HEXAGONAL BOLT M5x15	6	6									
4	R045416000	ANTERIOR DE MESA 1/2 M	BENCH FRONT 1/2 M	1	_									
4	S105402000	ANTERIOR MESA 1 M	BENCH FRONT 1 M	_	1									
	Q152004000	TORNIL, APLASTADO M5x13 A304	FLAT HEADED BOLT M5x13 A304	2	2									
	Q302022000	ARANDELA 16x6x1,2 A304	WASHER 16x6x1,2 A304	2	2									
5	R042611000	ESCUADRA INTER. DE MESA 1/2M	INTER BRACKET. TABLE 1/2M	1	_									
5	U172618000	ESCUADRA INTER. DE MESA 1M	INTER BRACKET. TABLE 1 M	_	1									
	Q221342000	REMACHE EXAGONAL M5	HEXAGONAL RIVET M5	4	4									
	Q012032000	TORNILLO EXAGONAL M5x15 A304	HEXAGONAL BOLT M5x15	6	6									
	Q302022000	ARANDELA 16x6x1,2 A304	WASHER 16x6x1,2 A304	4	4									
	Q419005000	REMACHE 4x8 ALMG3 / ALUMINIO	RIVET 4X8 ALMG3 / ALUMINIUM	7	7									
	Q221345000	REMACHE EXAGONAL M10	HEXAGONAL RIVET M10	8	8									
6	U172815000	PORTAMANDOS CI9-20	CONTROL HOLDER CI9-20	1	_									
6	U172808000	PORTAMANDOS CI9-40	CONTROL HOLDER CI9-40	_	1									
	U022836000	ESCUDO FAGOR	FAGOR EMBLEM	1	1									
	Q221023000	CLIP SUJECIÓN RÁPIDA Ø5	RAPID CONNECT CLIP Ø5	2	2									
	Q152004000	TORNIL, APLASTADO M5x13 A304	FLAT HEADED BOLT M5x13 A304	2	2									
7	R062810000	PANEL LATERAL DERECHO	RIGHT SIDE PANEL	1	1									
	Q221343000	REMACHE EXAGONAL M6	HEXAGONAL RIVET M6	5	5									
	Q221342000	REMACHE EXAGONAL M5	HEXAGONAL RIVET M5	7	7									
8	U962627000	ESCUADRA AMARRE PATA AD	LEG FASTENING BRACKET AD	2	2									
	Q162030000	TUERCA EXAGONAL M5	HEXAGONAL NUT M5	4	4									
	Q302022000	ARANDELA 16x6x1,2 A304	WASHER 16x6x1,2 A304	4	4									
	X010503000	CIERRE MUELLE	LOCK SPRING	2	2									

MOD.	COCINAS / RANGES	ZONA / ZONE	MUEBLE / FITTING	PLANO DIAGRAM	C-2693

ITEM	CODIGO REFERENCE	DENOMINACION	DENOMINATION	CI9-20 PLUS	CI9-40 PLUS							ELIMINADO ELIMINATED	INTRODUCID. INTRODUCED	NOTAS
1	R205425000	EMBELLECEDOR ESMALTE	ENAMEL TRIM	1	2									
2	R205438000	SOPORTE EMBELLECEDOR 1/2M	1/2M TRIM SUPPORT	1	_									
2	R205439000	SOPORTE EMBELLECEDOR 1M	TRIM SUPPORT 1M	_	1									
	Q419005000	REMACHE 4X8 ALMG3 / ALUMINIO	RIVET 4X8 ALMG3 / ALUMINIUM	2	2									
3	U175410000	ENCIMERA COMPLETA CI9-20	TOP CI9-20 COMPL.	1	_									
3	U175409000	ENCIMERA COMPLETA CI9-40	TOP CI9-40 COMPL.	_	1									
	Q012032000	TORNILLO EXAGONAL M5x15 A304	HEXAGONAL BOLT M5x15	6	6									
4	R045416000	ANTERIOR DE MESA 1/2 M	BENCH FRONT 1/2 M	1	_									
4	S105402000	ANTERIOR MESA 1 M	BENCH FRONT 1 M	_	1									
	Q152004000	TORNIL, APLASTADO M5x13 A304	FLAT HEADED BOLT M5x13 A304	2	2									
	Q302022000	ARANDELA 16x6x1,2 A304	WASHER 16x6x1,2 A304	2	2									
5	R042611000	ESCUADRA INTER. DE MESA 1/2M	INTER BRACKET. TABLE 1/2M	1	_									
5	U172618000	ESCUADRA INTER. DE MESA 1M	INTER BRACKET. TABLE 1 M	_	1									
	Q221342000	REMACHE EXAGONAL M5	HEXAGONAL RIVET M5	4	4									
	Q012032000	TORNILLO EXAGONAL M5x15 A304	HEXAGONAL BOLT M5x15	6	6									
	Q302022000	ARANDELA 16x6x1,2 A304	WASHER 16x6x1,2 A304	4	4									
	Q419005000	REMACHE 4x8 ALMG3 / ALUMINIO	RIVET 4X8 ALMG3 / ALUMINIUM	7	7									
	Q221341000	REMACHE EXAGONAL M4	HEXAGONAL RIVET M4	1	1									
	Q221345000	REMACHE EXAGONAL M10	HEXAGONAL RIVET M10	8	8									
6	U172815000	PORTAMANDOS CI9-20	CONTROL HOLDER CI9-20	1	_									
6	U172808000	PORTAMANDOS CI9-40	CONTROL HOLDER CI9-40	_	1									
	U022836000	ESCUDO FAGOR	FAGOR EMBLEM	1	1									
	Q221023000	CLIP SUJECIÓN RÁPIDA Ø5	RAPID CONNECT CLIP Ø5	2	2									
	Q152004000	TORNIL, APLASTADO M5x13 A304	FLAT HEADED BOLT M5x13 A304	2	2									
7	R062810000	PANEL LATERAL DERECHO	RIGHT SIDE PANEL	1	1									
	Q221343000	REMACHE EXAGONAL M6	HEXAGONAL RIVET M6	5	5									
	Q221342000	REMACHE EXAGONAL M5	HEXAGONAL RIVET M5	7	7									
8	U962627000	ESCUADRA AMARRE PATA AD	LEG FASTENING BRACKET AD	2	2									
	Q162030000	TUERCA EXAGONAL M5	HEXAGONAL NUT M5	4	4									
	Q302022000	ARANDELA 16x6x1,2 A304	WASHER 16x6x1,2 A304	4	4									
	X010503000	CIERRE MUELLE	LOCK SPRING	2	2									

MOD.	COCINAS / RANGES	ZONA / ZONE	MUEBLE / FITTING	PLANO DIAGRAM	C-2693

ITEM	CODIGO REFERENCE	DENOMINACION	DENOMINATION	CI9-20 PLUS	CI9-40 PLUS							ELIMINADO ELIMINATED	INTRODUCID. INTRODUCED	NOTAS
9	U172627000	BASE COMPLETA CI9-05	COMPLETE BASE CI9-05	1	_									
9	U172628000	BASE COMPLETA CI9-40	COMPLETE BASE CI9-40	_	1									
	Q419005000	REMACHE 4x8 ALMG3 / ALUMINIO	RIVET 4X8 ALMG3 / ALUMINIUM	12	12									
10	Z200107000	PATA REGULABLE	ADJUSTABLE LEG	2	2									
11	R062805000	ZOCALO COMPLETO 1/2M	COMPLETE SKIRTING 1/2M	1	_									
11	H352817000	ZOCALO COMPLETO	COMPLETE SKIRTING	_	1									
	Q151336000	TORNILLO SOPORTE GUIAS	TORNILLO SOPORTE GUIAS	2	2									
	Q221343000	REMACHE EXAGONAL M6	HEXAGONAL RIVET M6	2	2									
	Q152004000	TORNIL, APLASTADO M5x13 A304	FLAT HEADED BOLT M5x13	2	2									
	Q302022000	ARANDELA 16x6x1,2 A304	WASHER 16x6x1,2 A304	2	2									
12	R062811000	PANEL LATERAL IZQUIERDO	LEFT SIDE PANEL	1	1									
	Q221343000	REMACHE EXAGONAL M6	HEXAGONAL RIVET M6	5	5									
	Q221342000	REMACHE EXAGONAL M5	HEXAGONAL RIVET M5	7	7									
13	Z200107000	PATA REGULABLE	ADJUSTABLE LEG	2	2									
14	R042838000	PANEL POSTERIOR 1/2M AD	REAR PANEL 1/2M AD	1	_									
14	U042805000	PANEL POSTERIOR 1M AD	REAR PANEL 1M AD	_	1									
	Q419005000	REMACHE 4x8 ALMG3 / ALUMINIO	RIVET 4X8 ALMG3 / ALUMINIUM	4	4									
	Q152004000	TORNIL, APLASTADO M5x13 A304	FLAT HEADED BOLT M5x13 A304	2	2									
	X010503000	CIERRE MUELLE	LOCK SPRING	2	2									
15	U172612000	SOPORTE OMEGA CI9-20	OMEGA CI9-20 SUPPORT	2	_									
15	U172613000	SOPORTE OMEGA CI9-40	OMEGA CI9-40 SUPPORT	_	2									
	Q419005000	REMACHE 4x8 ALMG3 / ALUMINIO	RIVET 4X8 ALMG3 / ALUMINIUM	8	8									
16	U172609000	SOPORTE CARRIER	CARRIER SUPPORT	2	4									
	Q419005000	REMACHE 4x8 ALMG3 / ALUMINIO	RIVET 4X8 ALMG3 / ALUMINIUM	4	8									
	Q221342000	REMACHE EXAGONAL M5	HEXAGONAL RIVET M5	4	8									
17	12046932	CORREAGUAS 0,5M	WATER COLLECT 0,5M	1	_								01,10,12	
17	12046955	CORREAGUAS 1M	WATER COLLECT 1M	_	1								01,10,12	

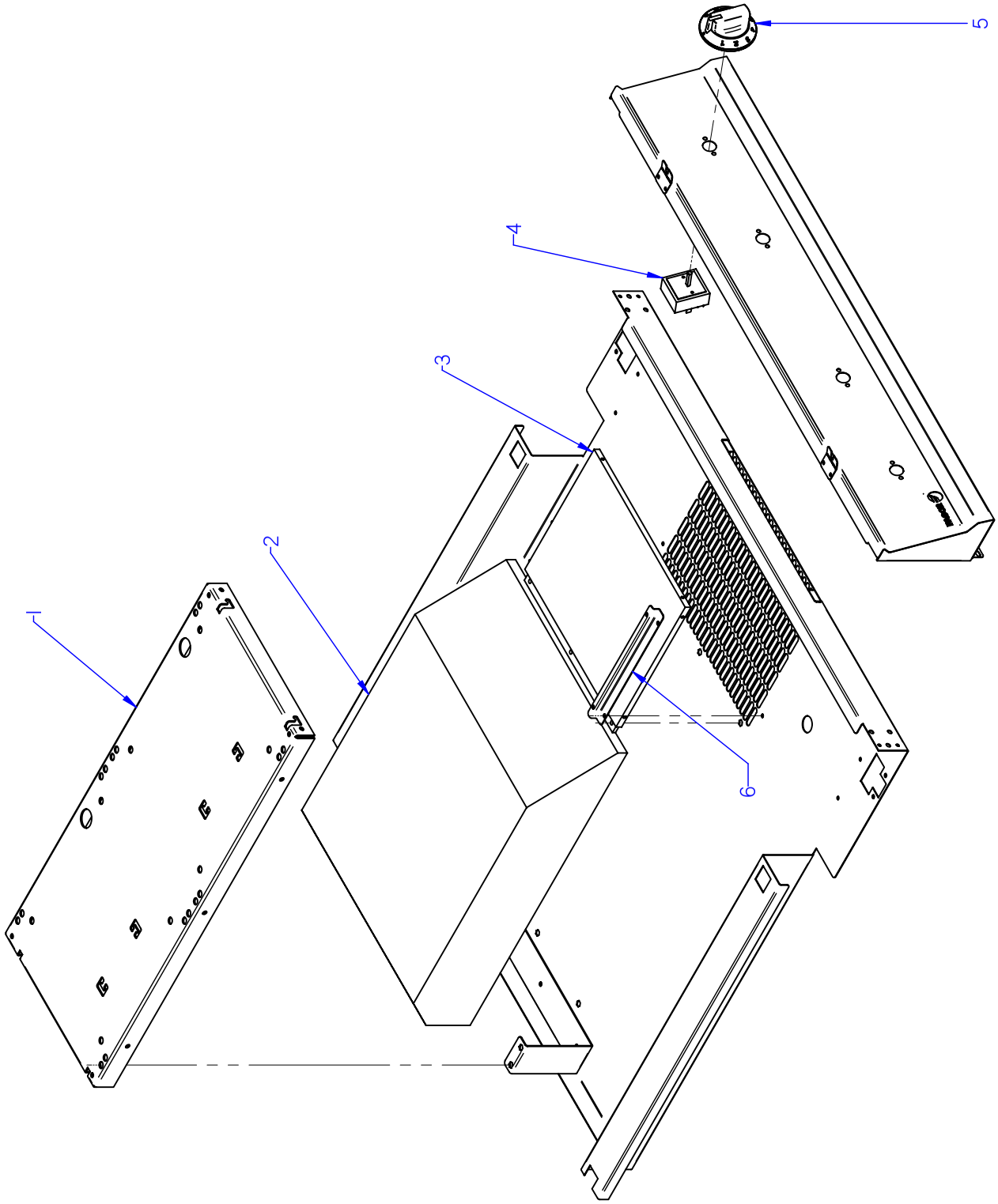

ITEM MARCADO EN COLOR = REPUESTO RECOMENDADO
COLOURED ITEM = RECOMMENDED SPARE PART

Nº plano / N º plane	Firma	Fecha / Date	Denominación / Denomination: PARTE FUNCIONAL ELECTRICA / ELECTRICAL FUNCTIONAL PART	Lamina / Sheet	
C-2694		2011-03	COCINA / RANGES CI9-20 / CI9-40 PLUS	2	FAGOR INDUSTRIAL

MOD.	COCINAS / RANGES	ZONA / ZONE	PARTE FUNCIONAL ELECTRICA ELECTRICAL FUNCTIONAL PART	PLANO DIAGRAM	C-2694

ITEM	CODIGO REFERENCE	DENOMINACION	DENOMINATION	CI9-20 PLUS	CI9-40 PLUS							ELIMINADO ELIMINATED	INTRODUCID. INTRODUCED	NOTAS
1	U172602000	BOBINA REDONDA	ROUND COIL	1	2									
	Q302022000	ARANDELA 16x6x1,2 A304	WASHER 16x6x1,2 A304	2	4									
	Q012032000	TORNILLO EXAGONAL M5x15 A304	HEXAGONAL BOLT M5x15	2	4									
2	U173015000	GENERADOR 2x5kW	GENERATOR 2x5kW	1	_									
2	U173014000	GENERADOR 4x5kW	GENERATOR 4x5kW	_	1									
3	U172624000	FILTRO CI9-40	CI9-40 FILTER	1	1									
4	U173016000	MANDO ROTATORIO CI	ROTATING KNOB CI	2	4									
	Q151320000	TORNILLO ALOMADO M4x6 H.ZINC.	CURVED SCREW M4X6 H. ZINC	4	8									
5	S162102000	BOTON DE MANDO	CONTROL BUTTON	2	4									
6	U172617000	GUIA FILTRO CI-900	FILTER GUIDE CI-900	2	2									
	Q419005000	REMACHE 4x8 ALMG3 / ALUMINIO	RIVET 4X8 ALMG3 / ALUMINIUM	4	4									
	Q221342000	REMACHE EXAGONAL M5	HEXAGONAL RIVET M5	6	6									
S/Nº	R253044000	REGLETA AUXILIAR FV-122	AUXILIARY TERMINAL STRIP FV-1	1	1									

MOD.	COCINAS / RANGES	ZONA / ZONE	VARIOS / MISCELLANEOUS	PLANO DIAGRAM	

ITEM	CODIGO REFERENCE	DENOMINACION	DENOMINATION	CI9-20 PLUS	CI9-40 PLUS							ELIMINADO ELIMINATED	INTRODUCID. INTRODUCED	NOTAS
	U176502000	FOLLETO DE INSTRUCIONES CV	INSTRUCTION LEAFLET CV	1	1									
	U173020000	MANGUERA 2 x 6 mm2 SILICONA	HOSE 2 x 6 mm2 SILICONE	2	4									
	U173021000	MANGUERA 2 x 0,5 mm2 SILICONA	HOSE 2 x 0,5 mm2 SILICONE	2	4									
	X363017000	CABLE MANGUERA 5X2.5 FE-8-18	HOSE CABLE 5X2.5 FE-8-18	1	_									
	X393008000	CABLE MANGUERA 5X6MM2	HOSE CABLE 5X6MM2	_	1									
	12004421	ESQUEMA MONTAJE	ASSEMBLY DIAGRAM	1	1									PLANO HC-71229
	NO INCLUYE ESQUEMA TEORICO, ESTA INTEGRADO EN KIT EGO			THE THEORETICAL DIAGRAM IS NOT INCLUDED AS IT IS GOUND THE WIT EGO KIT										

MOD.	COCINAS / RANGES	ZONA / ZONE	REPUESTOS RECOMENDADOS RECOMMENDED SPARE PART	PLANO DIAGRAM	

ITEM	CODIGO REFERENCE	DENOMINACION	DENOMINATION	CI9-20 PLUS	CI9-40 PLUS							ELIMINADO ELIMINATED	INTRODUCID. INTRODUCED	NOTAS
3	U175410000	ENCIMERA COMPLETA CI9-20	TOP CI9-20 COMPL.	1	_									C-2693
3	U175409000	ENCIMERA COMPLETA CI9-40	TOP CI9-40 COMPL.	_	1									C-2693
2	U173015000	GENERADOR 2x5kW	GENERATOR 2x5kW	1	_									C-2694
2	U173014000	GENERADOR 4x5kW	GENERATOR 4x5kW	_	1									C-2694
4	U173016000	MANDO ROTATORIO CI	ROTATING KNOB CI	2	4									C-2694

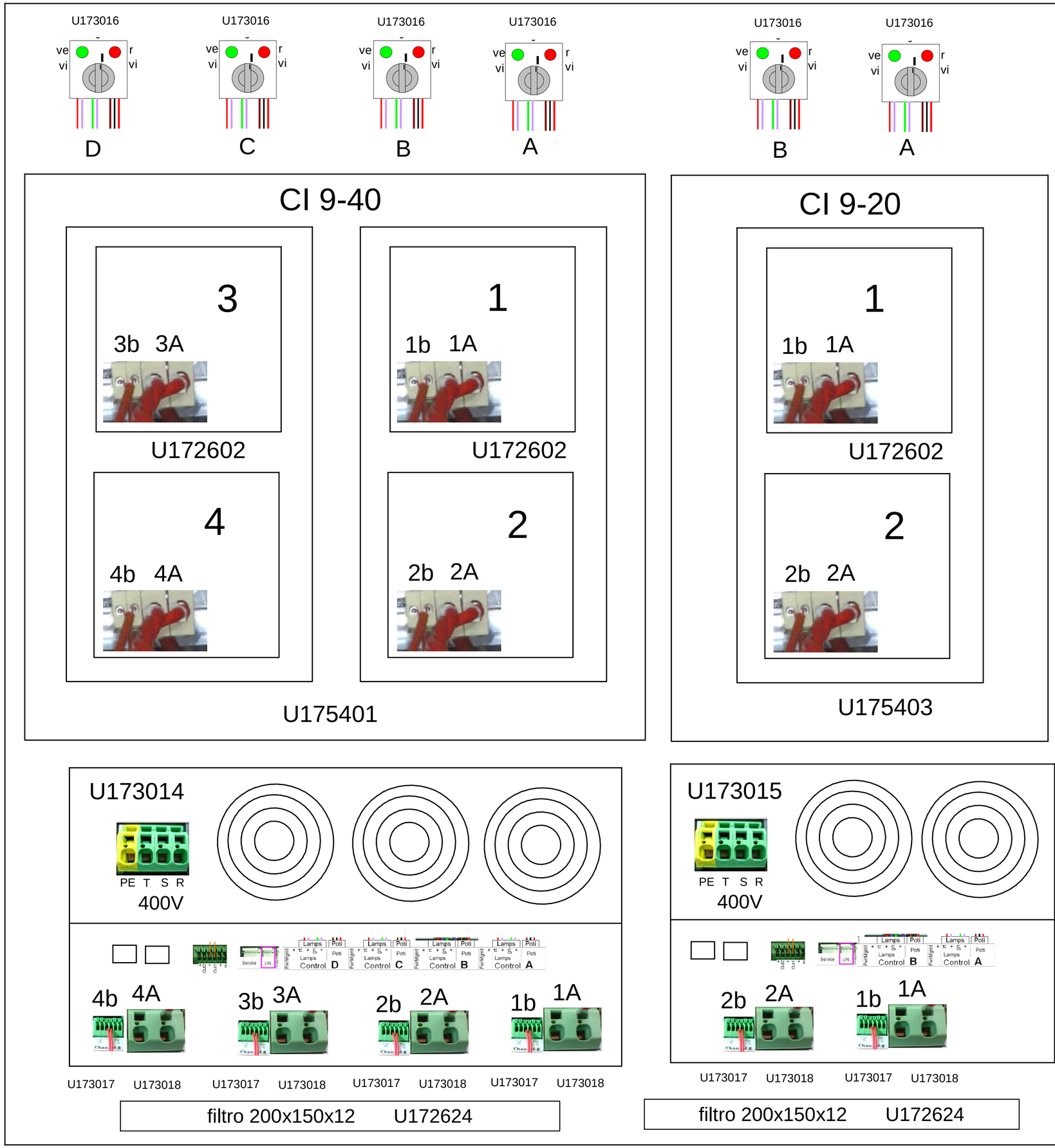

CI 920 Cable
manguera 5x2.5mm2
X363017

CI 940 Cable
manguera 5x6mm2
X393008

-	**Plano Montaje Cocina de Induccion**	-	-	**U173019000**	-
Zk./Nº	Pieza	Cant.	Materiala/Material	Klas. zk/Nº Clas.	Gainazal akabera/Tratamiento
Zk./Nº	Aldaketa/Modificaciones		Nork proposatua/Propuesta de	Data/Fecha	Perdoi orokorrak Tolerancias generales
-	-		-	-	
-	-		-	-	< 5 ± 0.2 / 50 ÷ 100 ± 0.8
-	-		-	-	5 ÷ 25 ± 0.4 / >100± 1
-	-		-	-	25 ÷ 50 ± 0.6 / α ± 1
-	-		-	-	

	Sinadura/Firma	Data/Fecha
Marraztua/Dibujado	**M.Maillo**	**2010-09-03**
Proiektatua/Proyectado	**M.Maillo**	**2010-09-03**
Egiaztatua/Comprobado	ENERITZ	**2010-09-03**

FAGOR
Fagor Industrial,Koop.Elk, Mugatua

Gainazal perdoia
Mecanizado superficial
—

Eskala/Escala
-

COCINAS

Plano Zk./Plano Nº
HD -13207

- Zk. ord. du
- Zk.gaitik ord.

Plano hau ezin daiteke erabili, ez berriztatu, gure baimenik gabe.