DESPIECE TECNICO

# Marmitas a vapor
# Marmites à vapeur
# Steam boling pans
# Dampf -Kochkessel
# Pentole a vapore
# Marmitas a vapor

## GAMA 900

## Modelos:

**MV9-10 BM**
**MV9-15 BM**
**MV9-10 BM S**
**MV9-15 BM S**

***Marzo 2009 March***

***Revisado Septiembre 2010***

**Fagor Industrial**

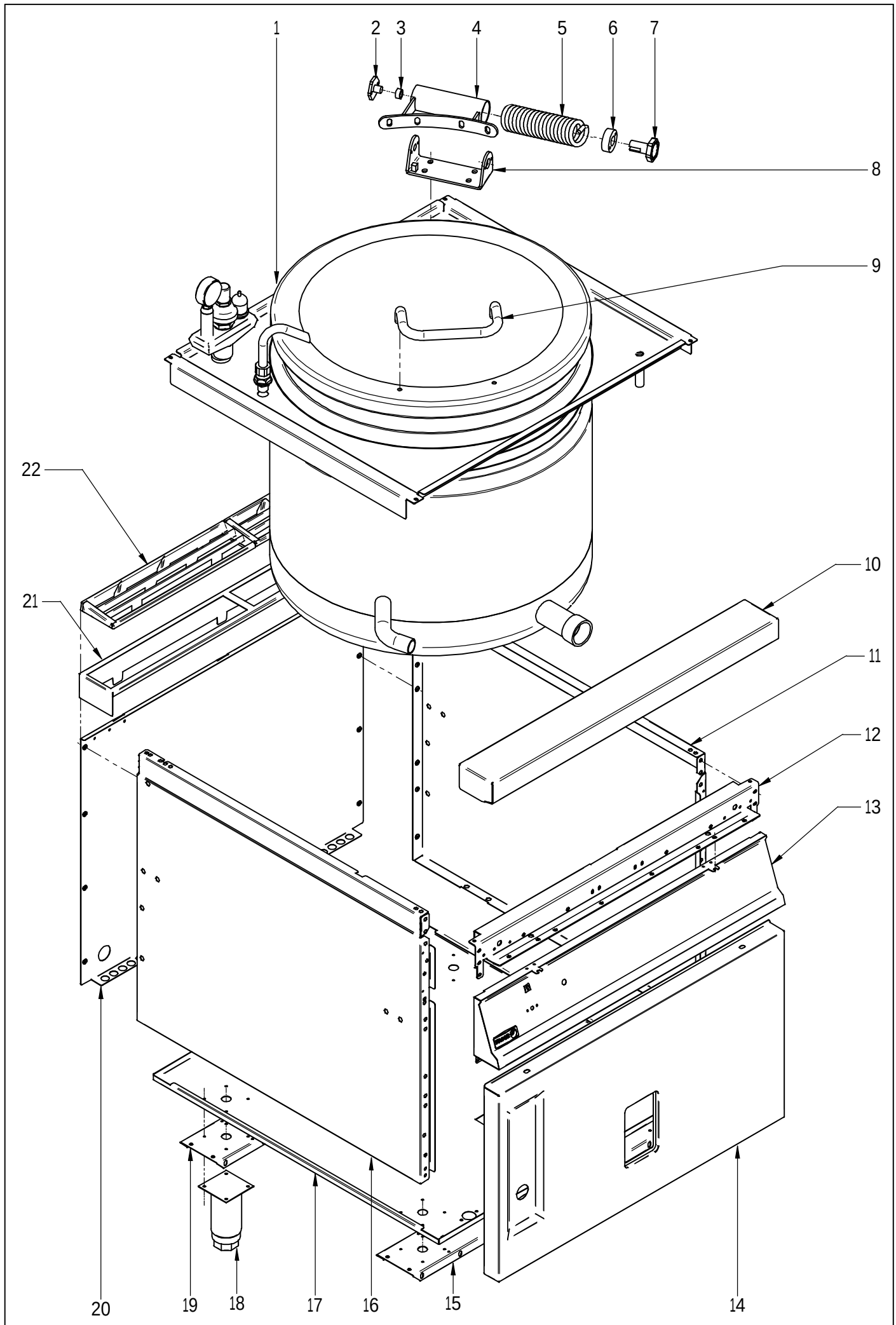


| N plano | Firma | Fecha | Aparato | MUEBLE | Lamina | |
|---|---|---|---|---|---|---|
| C-2280 | | 2009-03 | MARMITA MV9-10 BM; MV9-15 BM | | 1 | Fagor Industrial S.Coop. FAGOR<br>Oñate |

| MOD. | MARMITAS GAMA 900 / PAN 900 RANGE | ZONA | MUEBLE / UNIT | PLANO | C-2280 |
|---|---|---|---|---|---|

| ITEM | CODIGO | DENOMINACION | TEXTO | MV9-10 BM | MV9-15 BM | | | | | | | NOTAS |
|---|---|---|---|---|---|---|---|---|---|---|---|---|
| 1 | S516111000 | CUBA+TAPA MV9-10 BM | CUBA+TAPA MV9-10 BM | 1 | _ | | | | | | | |
| 1 | S506121000 | CUBA+TAPA MV9-15 BM | TUB+COVER MV9-15 BM | _ | 1 | | | | | | | |
| S/Nº | S516113000 | CUBA COMPLETA MV9-10 BM | COMPLETE TUB MV9-10 BM | 1 | _ | | | | | | | |
| S/Nº | S506122000 | CUBA COMPLETA MV9-15 BM | COMPLETE TUB MV9-15 BM | _ | 1 | | | | | | | |
| S/Nº | S036141000 | TAPA COMPLETA | COMPLETE COVER | 1 | 1 | | | | | | | |
| S/Nº | S016101000 | FILTRO DE CUBA | TUB FILTER | 1 | 1 | | | | | | | |
| | S036117000 | SOPORTE FILTRO | FILTER SUPPORT | 2 | 2 | | | | | | | |
| | Q412000000 | REMACHE TUBULAR 4x8 | TUBULAR RIVET 4x8 | 8 | 8 | | | | | | | |
| 2 | S116119000 | GIRO DE ASA | HANDLE ROTATION | 1 | 1 | | | | | | | |
| | Q012041000 | TORNILLO EXAGONAL M6x10 A304 | HEXAGONAL BOLT M6x10 A304 | 2 | 2 | | | | | | | |
| 3 | S116126000 | COJINETE CILINDRICO | CYLINDRICAL BEARING | 1 | 1 | | | | | | | |
| 4 | S036143000 | BISAGRA COMPLETA | COMPLETE HINGE | 1 | 1 | | | | | | | |
| 5 | S116121000 | RESORTE TAPA 07199 | SPRING COVER 07199 | 1 | 1 | | | | | | | |
| 6 | S116118000 | CASQUILLO | BUSHING | 1 | 1 | | | | | | | |
| 7 | S116120000 | TENSOR MUELLE | TENSIONING SPRING | 1 | 1 | | | | | | | |
| | Q012042000 | TORNILLO EXAGONAL M6x15 | HEXAGONAL BOLT M6x15 | 2 | 2 | | | | | | | |
| | Q262040000 | ARANDELA GROW. A6 A304 | WASHER GROW. A6 A304 | 2 | 2 | | | | | | | |
| 8 | S036131000 | SOPORTE BISAGRA COMPLETA | COMPLETE HINGE SUPPORT | 1 | 1 | | | | | | | ELIMINADO 03.05.10 |
| 8 | S226136000 | SOPORTE BISAGRA COMPLETA | COMPLETE HINGE SUPPORT | 1 | 1 | | | | | | | INTRODUCIDO 03.05.10 |
| S/Nº | S026102000 | REFUERZO BISAGRA MARMITAS | COOK. POT HINGE REINFORCE. | 1 | 1 | | | | | | | |
| | Q232050000 | ARANDELA A8 | WASHER A8 | 4 | 4 | | | | | | | |
| | Q262050000 | ARANDELA GROW. A8 A304 | WASHER GROW. A8 A304 | 4 | 4 | | | | | | | |
| | Q212051000 | TUERCA SOMBRERO M8 | COWL NUT M8 | 4 | 4 | | | | | | | |
| 9 | S036123000 | ASA DE TAPA | COVER HANDLE | 1 | 1 | | | | | | | |
| | Q012053000 | TORNILLO EXAGONAL M8x20 A304 | HEXAGONAL BOLT M8x20 A304 | 2 | 2 | | | | | | | |
| | Q302027000 | ARANDELA 25x8,4x2 | WASHER 25X8.4X2 | 2 | 2 | | | | | | | |
| | Q302027000 | ARANDELA 25x8,4x2 | WASHER 25X8.4X2 | 2 | 2 | | | | | | | |
| 10 | S105402000 | ANTERIOR DE MESA 1M | BENCH FRONT 1M | 1 | 1 | | | | | | | |
| | Q152004000 | TORNILLO APLAST. M5x13 A304 | MUSHROOM HEAD BOLT M5x13 A | 2 | 2 | | | | | | | |
| | Q302022000 | ARANDELA 16x6x1,2 A304 | WASHER 16x6x1.2 A304 | 2 | 2 | | | | | | | |
| | | | | | | | | | | | | |

| MOD. | MARMITAS GAMA 900 / PAN 900 RANGE | ZONA | MUEBLE / UNIT | PLANO | C-2280 |
|---|---|---|---|---|---|

| ITEM | CODIGO | DENOMINACION | TEXTO | MV9-10 BM | MV9-15 BM | | | | | | | NOTAS |
|---|---|---|---|---|---|---|---|---|---|---|---|---|
| 11 | X162814000 | PANEL LATERAL DERECHO G900 | RIGHT SIDE PANEL G900 | 1 | 1 | | | | | | | |
| | Q221343000 | REMACHE EXAGONAL M6 | HEXAGONAL RIVET M6 | 11 | 11 | | | | | | | |
| | Q221342000 | REMACHE EXAGONAL M5 | HEXAGONAL RIVET M5 | 6 | 6 | | | | | | | |
| | Q012053000 | TORNILLO EXAGONAL M8x20 A304 | HEXAGONAL BOLT M8x20 A304 | 2 | 2 | | | | | | | |
| 12 | S222606000 | ESCUADRA INTE. ANT. MESA | BENCH FRONT INT BRACKET | 1 | 1 | | | | | | | |
| | Q221342000 | REMACHE EXAGONAL M5 | HEXAGONAL RIVET M5 | 7 | 7 | | | | | | | |
| | Q012032000 | TORNILLO EXAGONAL M5X15 | HEXAGONAL BOLT M5x15 | 6 | 6 | | | | | | | |
| 13 | S502803000 | PORTAMANDOS MV9-00 BM | CONTROL HOLDER MV9-00 BM | 1 | 1 | | | | | | | |
| | Q152004000 | TORNILLO APLAST. M5x13 A304 | MUSHROOM HEAD BOLT M5x13 A | 4 | 4 | | | | | | | |
| | Q221343000 | REMACHE EXAGONAL M6 | HEXAGONAL RIVET M6 | 2 | 2 | | | | | | | |
| | Q151336000 | TORNILLO SOPORTE GUIAS | GUIDE SUPPORT BOLT | 2 | 2 | | | | | | | |
| | Q302022000 | ARANDELA 16x6x1,2 A304 | WASHER 16x6x1.2 A304 | 2 | 2 | | | | | | | |
| | U022836000 | ESCUDO FAGOR | FAGOR EMBLEM | 1 | 1 | | | | | | | |
| | Q221023000 | CLIP SUJECIÓN RÁPIDA Ø 5 | RAPID FASTENING CLIP Ø5 | 2 | 2 | | | | | | | |
| 14 | S182807000 | PANEL FRONTAL MV9-10 | FRONT PANEL MV9-10 | 1 | _ | | | | | | | |
| 14 | S502805000 | PANEL FRONTAL MV9-15 BM | FRONT PANEL MV9-15 BM | _ | 1 | | | | | | | |
| | Q012042000 | TORNILLO EXAGONAL M6x15 | HEXAGONAL BOLT M6x15 | 2 | 2 | | | | | | | |
| | Q302022000 | ARANDELA 16x6x1,2 A304 | WASHER 16x6x1.2 A304 | 2 | 2 | | | | | | | |
| 15 | S102610000 | LISTON SOPORTE PATAS ANTER. | FRONT LEG SUPPORT STRIP | 1 | 1 | | | | | | | |
| 16 | X162813000 | PANEL LATERAL IZQUIERDO G900 | LEFT SIDE PANEL G900 | 1 | 1 | | | | | | | |
| | Q221343000 | REMACHE EXAGONAL M6 | HEXAGONAL RIVET M6 | 11 | 11 | | | | | | | |
| | Q221342000 | REMACHE EXAGONAL M5 | HEXAGONAL RIVET M5 | 6 | 6 | | | | | | | |
| | Q012053000 | TORNILLO EXAGONAL M8x20 A304 | HEXAGONAL BOLT M8x20 A304 | 2 | 2 | | | | | | | |
| 17 | S502604000 | BASE INFERIOR MV900 | LOWER BASE MV900 | 1 | 1 | | | | | | | |
| | Q221343000 | REMACHE EXAGONAL M6 | HEXAGONAL RIVET M6 | 2 | 2 | | | | | | | |
| 18 | X260151000 | PATA REGULABLE | ADJUSTABLE LEG | 4 | 4 | | | | | | | |
| | Q411304000 | REMACHE AVIBULB Ø4,8 | AVIBULB RIVET Ø4.8 | 16 | 16 | | | | | | | |
| 19 | S102611000 | LISTON SOPORTE PATAS POS.1M | REAR LEG SUPPORT STRIP 1M | 1 | 1 | | | | | | | |
| | Q012042000 | TORNILLO EXAGONAL M6x15 | HEXAGONAL BOLT M6x15 | 8 | 8 | | | | | | | |
| | Q302022000 | ARANDELA 16x6x1,2 A304 | WASHER 16x6x1.2 A304 | 8 | 8 | | | | | | | |
| | Q232040000 | ARANDELA A6 | WASHER A6 | 8 | 8 | | | | | | | |

| MOD. | MARMITAS GAMA 900 / PAN 900 RANGE | ZONA | MUEBLE / UNIT | PLANO | C-2280 |
|---|---|---|---|---|---|

| ITEM | CODIGO | DENOMINACION | TEXTO | MV9-10 BM | MV9-15 BM | | | | | | | NOTAS |
|---|---|---|---|---|---|---|---|---|---|---|---|---|
| 20 | U562853000 | PANEL POSTERIOR 1M G9-00 | REAR PANEL 1M G9-00 | 1 | 1 | | | | | | | |
| | Q419005000 | REMACHE 4x8 ALMG3 / ALUMINIO | RIVET 4X8 ALMG3 / ALUMINIUM | 8 | 8 | | | | | | | |
| 21 | R205439000 | SOPORTE EMBELLECEDOR 1M | TRIM SUPPORT 1M | 1 | 1 | | | | | | | |
| 22 | R205425000 | EMBELLECEDOR ESMALTE | ENAMEL TRIM | 2 | 2 | | | | | | | |

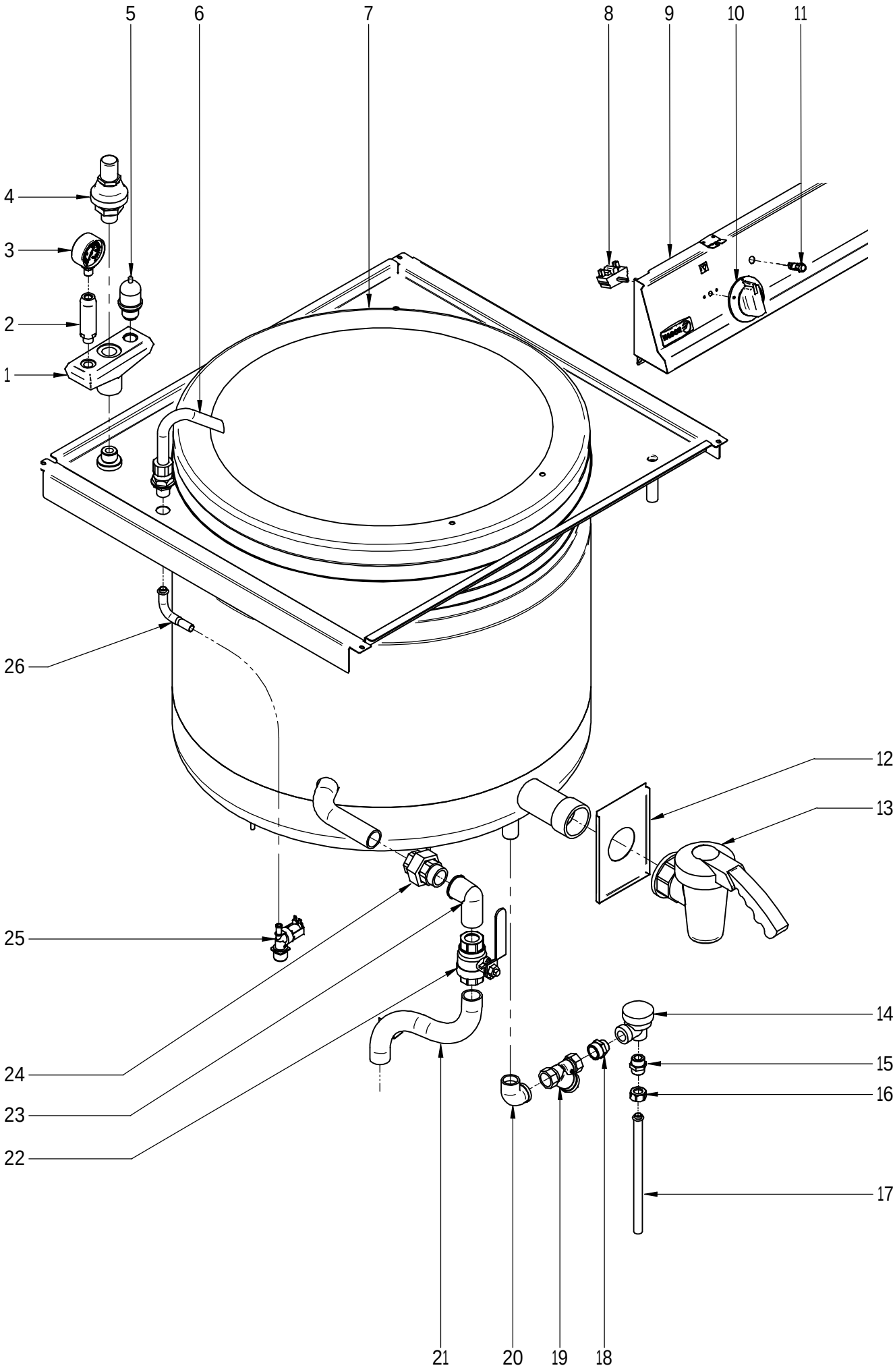


| N plano | Firma | Fecha | Aparato | CONJUNTO FUNCIONAL | Lamina | |
|---|---|---|---|---|---|---|
| C-2281 | | 2009-03 | MARMITA MV9-10 BM; MV9-15 BM | | 2 | Fagor Industrial S.Coop. FAGOR Oñate |

| MOD. | MARMITAS GAMA 900 / PAN 900 RANGE | ZONA | CONJUNTO FUNCIONAL / FUNCTIONAL UNIT | PLANO | C-2281 |
|---|---|---|---|---|---|

| ITEM | CODIGO | DENOMINACION | TEXTO | MV9-10 BM | MV9-15 BM | | | | | | | NOTAS |
|---|---|---|---|---|---|---|---|---|---|---|---|---|
| 1 | S022100000 | SOPORTE 3 SALIDAS 22805062 | 3-OUTPUT SUPPORT 22805062 | 1 | 1 | | | | | | | |
| | Q306063000 | ARANDELA Ø34x26,7x1,5 | WASHER Ø34x26.7x1.5 | 1 | 1 | | | | | | | |
| 2 | S022102000 | PORTAMANOMETRO 2210617 | MANOMETERHOLDER 2210617 | 1 | 1 | | | | | | | |
| | Q306066000 | ARANDELA Ø23,9x16,6x3 | WASHER Ø23.9X16.6X3 | 1 | 1 | | | | | | | |
| 3 | 9220815000 | MANOMETRO 36303601 | MANOMETER 36303601 | 1 | 1 | | | | | | | |
| 4 | S022101000 | VALVULA SEGURIDAD 01508004 | SAFETY VALVE 01508004 | 1 | 1 | | | | | | | |
| | Q306063000 | ARANDELA Ø34x26,7x1,5 | WASHER Ø34x26.7x1.5 | 1 | 1 | | | | | | | |
| 5 | S022103000 | VALVULA PRESION 01509004 | PRESSURE VALVE 01509004 | 1 | 1 | | | | | | | |
| | Q306064000 | ARANDELA Ø29,8x24,8x1,5 | WASHER Ø29.8x24.8x1.5 | 1 | 1 | | | | | | | |
| 6 | S052100000 | TUBO LLENADO 01102113 | FILLER PIPE 01102113 | 1 | 1 | | | | | | | |
| 7 | S516113000 | CUBA COMPLETA MV9-10 BM | COMPLETE TUB MV9-10 BM | 1 | _ | | | | | | | |
| 7 | S506122000 | CUBA COMPLETA MV9-15 BM | COMPLETE TUB MV9-15 BM | _ | 1 | | | | | | | |
| 8 | T343008000 | CONMUTADOR HGC | SWITCH HGC | 1 | 1 | | | | | | | |
| 9 | S502803000 | PORTAMANDOS MV9-00 BM | CONTROL HOLDER MV9-00 BM | 1 | 1 | | | | | | | |
| 10 | X022133000 | MANDO AGUA MARMITA Ø 6 | WATER PAN CONTROL Ø 6 | 1 | 1 | | | | | | | |
| 11 | X143018000 | PILOTO AMBAR SARTEN | FRYING PAM AMBER PILOT | 1 | 1 | | | | | | | |
| 12 | S112803000 | CUBIERTA GRIFO MG-900 | TAP COVER MG-900 | 1 | 1 | | | | | | | |
| S/Nº | S112105000 | MUELLE MV9-00 | SPRING MV9-00 | 1 | 1 | | | | | | | |
| 13 | S102125000 | GRIFO VACIADO 2" | DRAINAGE TAP 2" | 1 | 1 | | | | | | | |
| 14 | S502102000 | GRIFO CONDENSAC. BPT13AX 1/2 | CONDENS. TAP BPT13AX 1/2 | 1 | 1 | | | | | | | |
| 15 | S205023000 | MANGUITO DOBLE 1/2 | DOUBLE SLEEVE 1/2 | 1 | 1 | | | | | | | |
| 16 | Q223010000 | TUERCA 1/2 GAS | NUT 1/2 GAS | 1 | 1 | | | | | | | |
| | Q306024000 | JUNTA18X12.5X1.5 | SEAL 18X12.5X1.5 | 1 | 1 | | | | | | | |
| 17 | H315014000 | TUBO ANTERIOR DESAGÜE | DRAINAGE PIPE | 1 | 1 | | | | | | | |
| 18 | S502106000 | MANGUITO DOBLE 3/4"- 1/2" | DOUBLE SLEEVE 3/4"- 1/2" | 1 | 1 | | | | | | | |
| 19 | Z102308000 | FILTRO 3/4 | FILTER 3/4" | 1 | 1 | | | | | | | |
| | R205062000 | TUERCA CIEGA 1/2" | 1/2" NUT | 1 | 1 | | | | | | | |
| | Q306053000 | ARANDELA TAPON 18.5X3 | 18.5X3 WASHER | 1 | 1 | | | | | | | |
| 20 | Z718421000 | CODO M-H 3/4" LATON | L-BEND M-H 3/4" BRASS | 1 | 1 | | | | | | | |
| | | | | | | | | | | | | |
| | | | | | | | | | | | | |

| MOD. | MARMITAS GAMA 900 / PAN 900 RANGE | ZONA | CONJUNTO FUNCIONAL / FUNCTIONAL UNIT | PLANO | C-2281 |
|---|---|---|---|---|---|

| ITEM | CODIGO | DENOMINACION | TEXTO | MV9-10 BM | MV9-15 BM | | | | | | | NOTAS |
|---|---|---|---|---|---|---|---|---|---|---|---|---|
| 21 | S185006000 | CONDUCCION ENTRADA VAPOR | STEAM INPUT PIPE | 1 | 1 | | | | | | | ELIMINADO 30.06.09 |
| 21 | S185012000 | CONDUCCION ENTRADA VAPOR | STEAM INPUT PIPE | 1 | 1 | | | | | | | INTRODUCIDO 30.06.09 |
| | Q221343000 | REMACHE EXAGONAL M6 | HEXAGONAL RIVET M6 | 1 | 1 | | | | | | | |
| | Q012042000 | TORNILLO EXAGONAL M6X15 | HEXAGONAL BOLT M6x15 | 1 | 1 | | | | | | | |
| | Q302022000 | ARANDELA 16X6X1.2 A.304 | WASHER 16X6X1.2 A.304 | 1 | 1 | | | | | | | |
| 22 | S502103000 | VALVULA ESFERA PASO TOTAL | SPHERICAL VALVE TOTAL PASS | 1 | 1 | | | | | | | |
| 23 | S502105000 | CODO MACHO-HEMBRA 1" | MALE-FEMALE L-BEND 1" | 1 | 1 | | | | | | | |
| 24 | S502104000 | RACOR EMPALME DE 1 | CONNECTION 1 | 1 | 1 | | | | | | | |
| 25 | Z701135000 | ELECTROVALVULA SIMP. 220V | SIMPLE SOLENOID VALVE 220V | 1 | 1 | | | | | | | |
| | S222645000 | PROT. ELECTROVALVULA M900 | SOLENOID PROTECTION M900 | 1 | 1 | | | | | | | INTRODUCIDO 01.12.09 |
| | S222646000 | TAPA PROTEC. ELECTR. M900 | PROT. COVER SOLENOID M900 | 1 | 1 | | | | | | | INTRODUCIDO 01.12.09 |
| | Z601156000 | REGULADOR 8L RO. 254.034 | REGULATOR 8L RED 254.034 | 3 | 3 | | | | | | | |
| | Q032021000 | TORNILLO ALOMADO M4X10 | CURVED SCREW M4X10 | 4 | 4 | | | | | | | |
| S/Nº | 3676900000 | TUBO GOMA NEGRA Ø 17*10 | BLACK RUBBER PIPE 17*10 | 1 | 1 | | | | | | | |
| | Q881308000 | ABRAZADERA 8-14L | CLAMP 8-14L | 2 | 2 | | | | | | | |
| 26 | S565027000 | TUBO ENTRADA TUBO LLENADO | INTAKE PIPE FILLER PIPE | 1 | 1 | | | | | | | |
| | Q306024000 | JUNTA18X12.5X1.5 | SEAL 18X12.5X1.5 | 1 | 1 | | | | | | | |

| MOD. | MARMITAS GAMA 900 / PAN 900 RANGE | ZONA | CONJUNTO FUNCIONAL / FUNCTIONAL UNIT | PLANO | C-2281 |
|---|---|---|---|---|---|

| ITEM | CODIGO | DENOMINACION | TEXTO | MV9-10 BM | MV9-15 BM | | | | | | | NOTAS |
|---|---|---|---|---|---|---|---|---|---|---|---|---|
| 21 | S185006000 | CONDUCCION ENTRADA VAPOR | STEAM INPUT PIPE | 1 | 1 | | | | | | | |
| | Q221343000 | REMACHE EXAGONAL M6 | HEXAGONAL RIVET M6 | 1 | 1 | | | | | | | |
| | Q012042000 | TORNILLO EXAGONAL M6X15 | HEXAGONAL BOLT M6x15 | 1 | 1 | | | | | | | |
| | Q302022000 | ARANDELA 16X6X1.2 A.304 | WASHER 16X6X1.2 A.304 | 1 | 1 | | | | | | | |
| 22 | S502103000 | VALVULA ESFERA PASO TOTAL | SPHERICAL VALVE TOTAL PASS | 1 | 1 | | | | | | | |
| 23 | S502105000 | CODO MACHO-HEMBRA 1" | MALE-FEMALE L-BEND 1" | 1 | 1 | | | | | | | |
| 24 | S502104000 | RACOR EMPALME DE 1 | CONNECTION 1 | 1 | 1 | | | | | | | |
| 25 | Z701135000 | ELECTROVALVULA SIMP. 220V | SIMPLE SOLENOID VALVE 220V | 1 | 1 | | | | | | | |
| | Z601156000 | REGULADOR 8L RO. 254.034 | REGULATOR 8L RED 254.034 | 3 | 3 | | | | | | | |
| | Q032021000 | TORNILLO ALOMADO M4X10 | CURVED SCREW M4X10 | 4 | 4 | | | | | | | |
| S/Nº | 3676900000 | TUBO GOMA NEGRA Ø 17*10 | BLACK RUBBER PIPE 17*10 | 1 | 1 | | | | | | | |
| | Q881308000 | ABRAZADERA 8-14L | CLAMP 8-14L | 2 | 2 | | | | | | | |
| 26 | S565027000 | TUBO ENTRADA TUBO LLENADO | INTAKE PIPE FILLER PIPE | 1 | 1 | | | | | | | |
| | Q306024000 | JUNTA18X12.5X1.5 | SEAL 18X12.5X1.5 | 1 | 1 | | | | | | | |

| MOD. | MARMITAS GAMA 900 / PAN 900 RANGE | ZONA | VARIOS / VARIOUS | PLANO | |
|---|---|---|---|---|---|

| ITEM | CODIGO | DENOMINACION | TEXTO | MV9-10 BM | MV9-15 BM | | | | | | | NOTAS |
|---|---|---|---|---|---|---|---|---|---|---|---|---|
| | S246501000 | FOLLETO DE INSTRUCCIONES MV | INSTRUCTION LEAFLET MV | 1 | 1 | | | | | | | |
| | S593002000 | ESQUEMA TEORICO ADHESIVO | THEOR. DIAGRAM LABEL | 1 | 1 | | | | | | | PLANO HB-80044 |
| | S593003000 | CABLEADO MARMITA MV7-10 BM | PAN WIRING MV7-10 BM | 1 | 1 | | | | | | | |

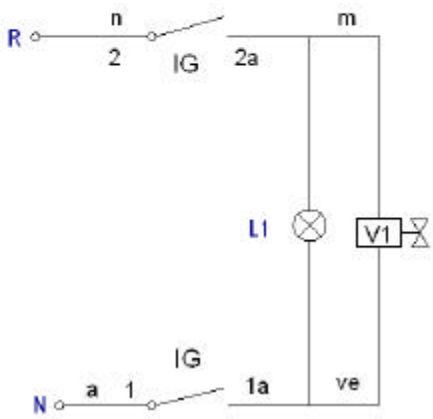


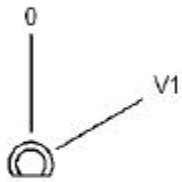


| IG | 1<br>1a | 2<br>2a |
|---|---|---|
| 0 | | |
| V1 | X | X |

a=azul-blue
n=negro-black-noir
m=marron-brown-marron
ve=verde-green-vert

IG = Interruptor general
L1 = Lampara funcionamiento
V1 = Valvula Agua Caliente

**S593002000**

| | | | | | |
|---|---|---|---|---|---|
| - | Eskema teorikoa: MV7-10 BM | - | - | S593002000 | - |
| Zk.Nº | Pieza | Cant. | Materiala/Material | Klas. zk/Nº Clas. | Gainazal akabera/Tratamiento |
| Zk.Nº | Aldaketa/Modificaciones | | Nork proposatua/Propuesta de | Data/Fecha | Perdoi orokorrak<br>Tolerancias generales<br>< 5 ± 0.2 50 - 100 ± 0.8<br>5 ÷ 25 ± 0.4 >100± 1<br>25 ÷ 50 ± 0.6 α ± 1 |
| - | - | - | - | - | |
| - | - | - | - | - | |
| - | - | - | - | - | |
| - | - | - | - | - | |
| - | - | - | - | - | |

| | Sinadura/Firma | Data/Fecha |
|---|---|---|
| Marraztua/Dibujado | ecarrascal | 2007-12-11 |
| Proiektatua/Proyectado | ecarrascal | 2007-12-11 |
| Egiaztatua/Comprobado | [illegible] | 2007-12-11 |

Eskala/Escala -

FAGOR
Fagor Industrial/Coop.Elk, Mugatua

# MARMITAK

Plano hau ezin daiteke erabili, ez berriztatu, gure baimenik gabe.

Gainazal perdoia
Mecanizado superficial
—

Plano Zk./Plano Nº
**HB-80044**

| | |
|---|---|
| - | Zk. ord. du |
| - | Zk.gaitik ord. |