Mod./Type: **_70/... FT...ES... - _90/... FT...ES...**

**SIMPLE**

cod./num. 2531824.00

data/date: 26/08/2014

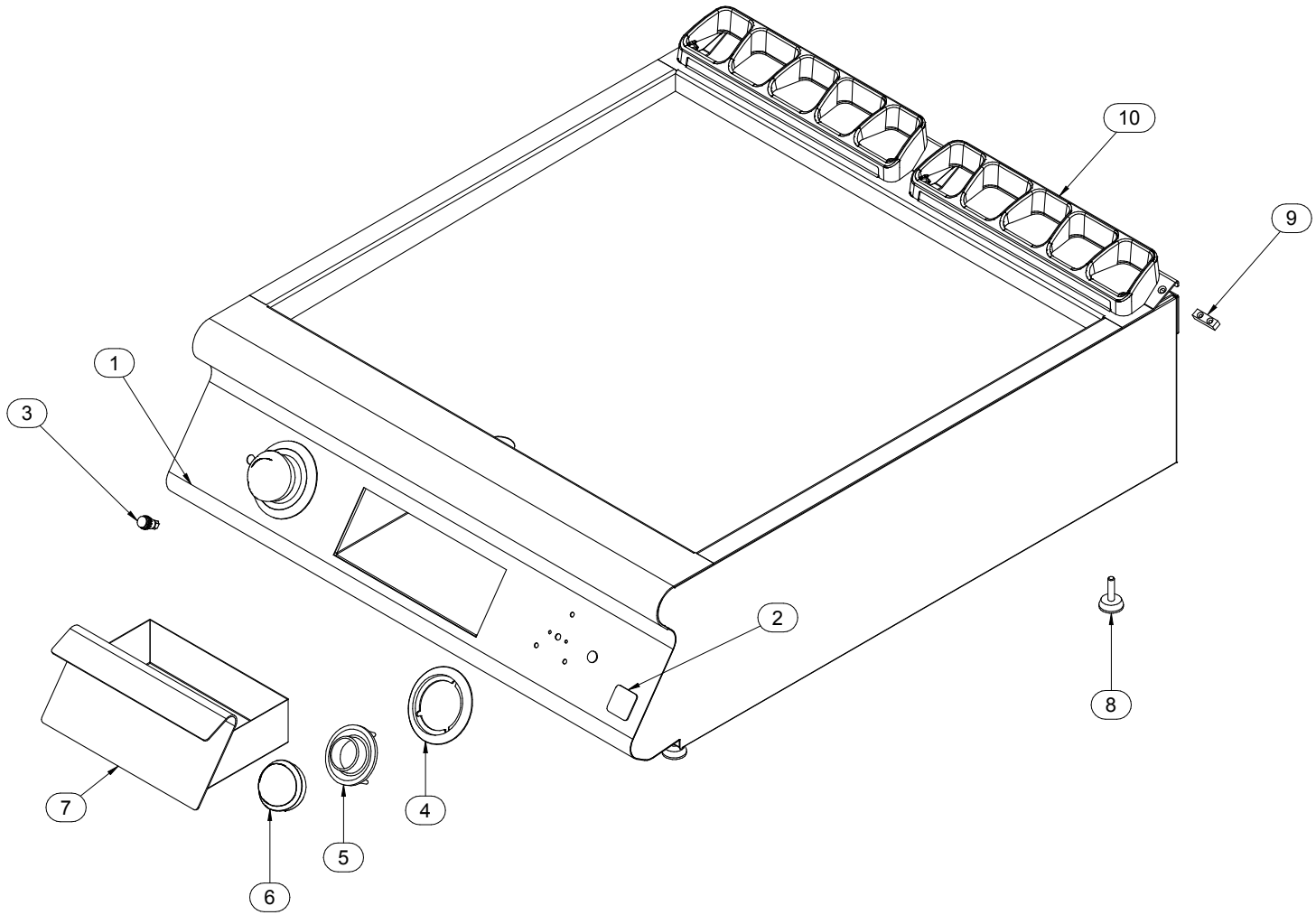

Mod./Type: **_70/... FT...E... - _ 90/... FT...E...**

**EXTREME**

cod./num. 2531635.00

data/date: 27/08/2014

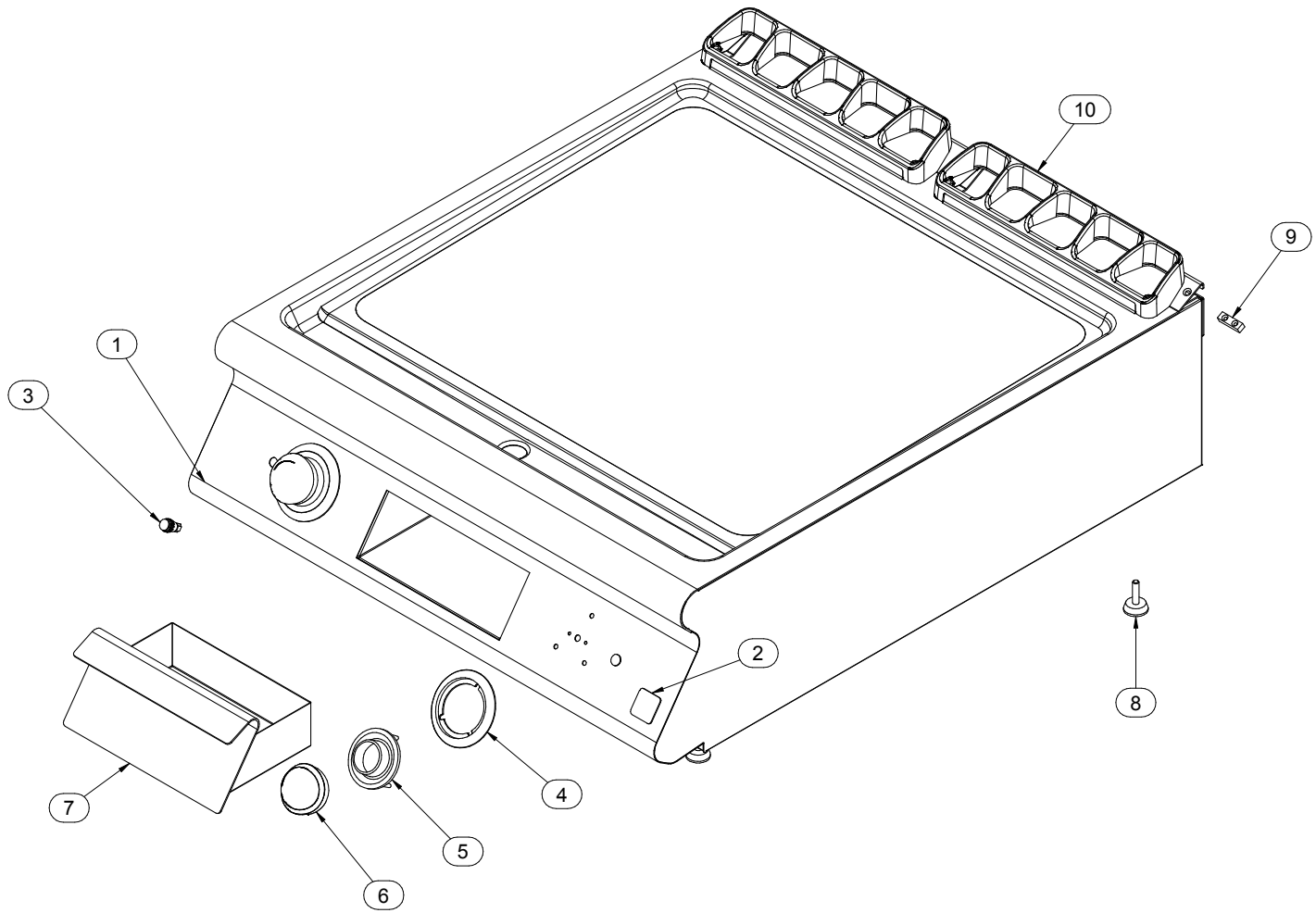

| Mod./Type: | **_70/... FT...ES... - _90/... FT...ES...** | cod./num. | 2531826.00 |
|---|---|---|---|
| | **SIMPLE** | data/date: | 27/08/2014 |

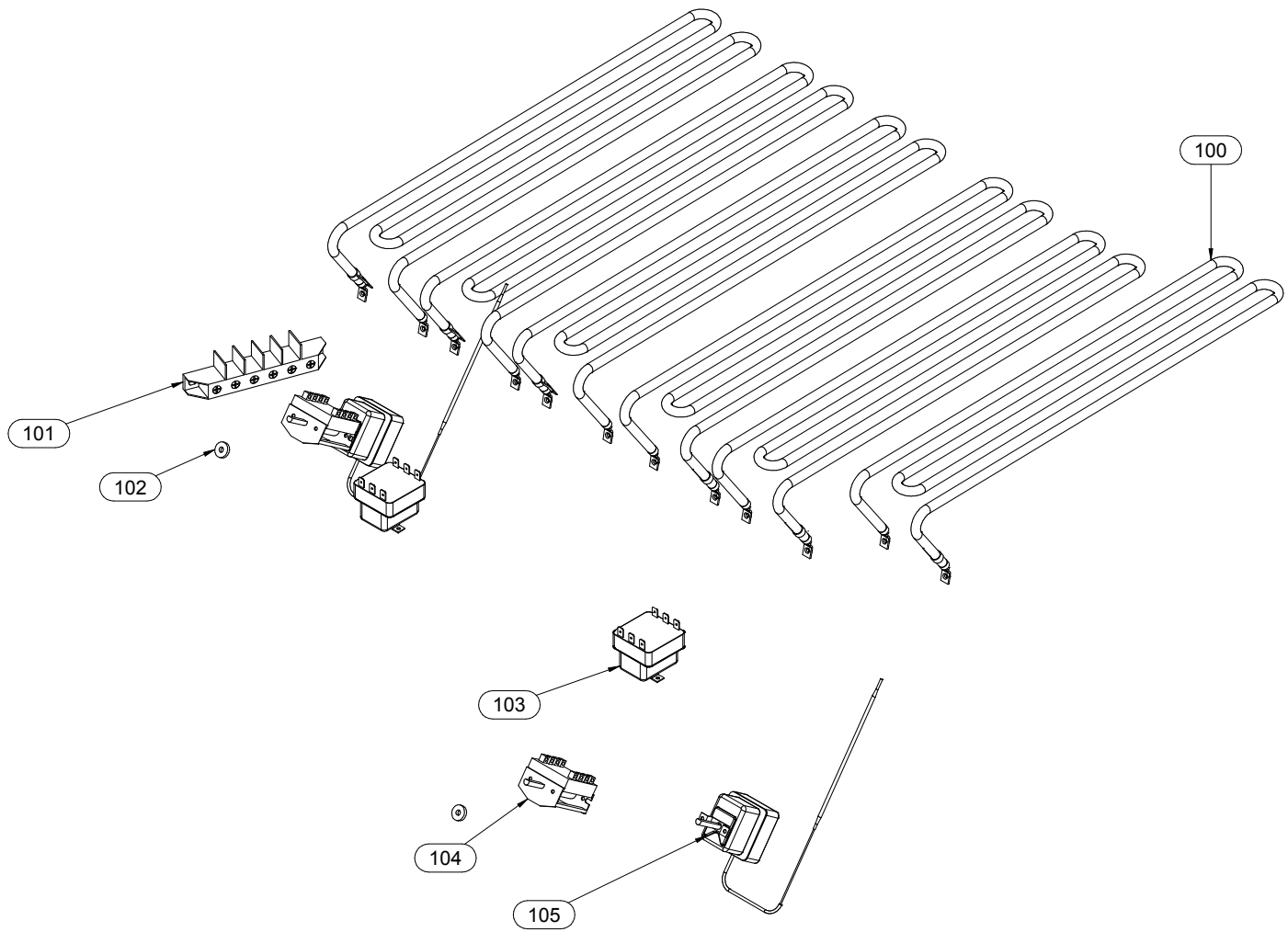

| Mod./Type: | _70/... FT...E... - _90/... FT...E... | cod./num. | 2531637.00 |
|---|---|---|---|
| | **EXTREME** | data/date: | 27/08/2014 |

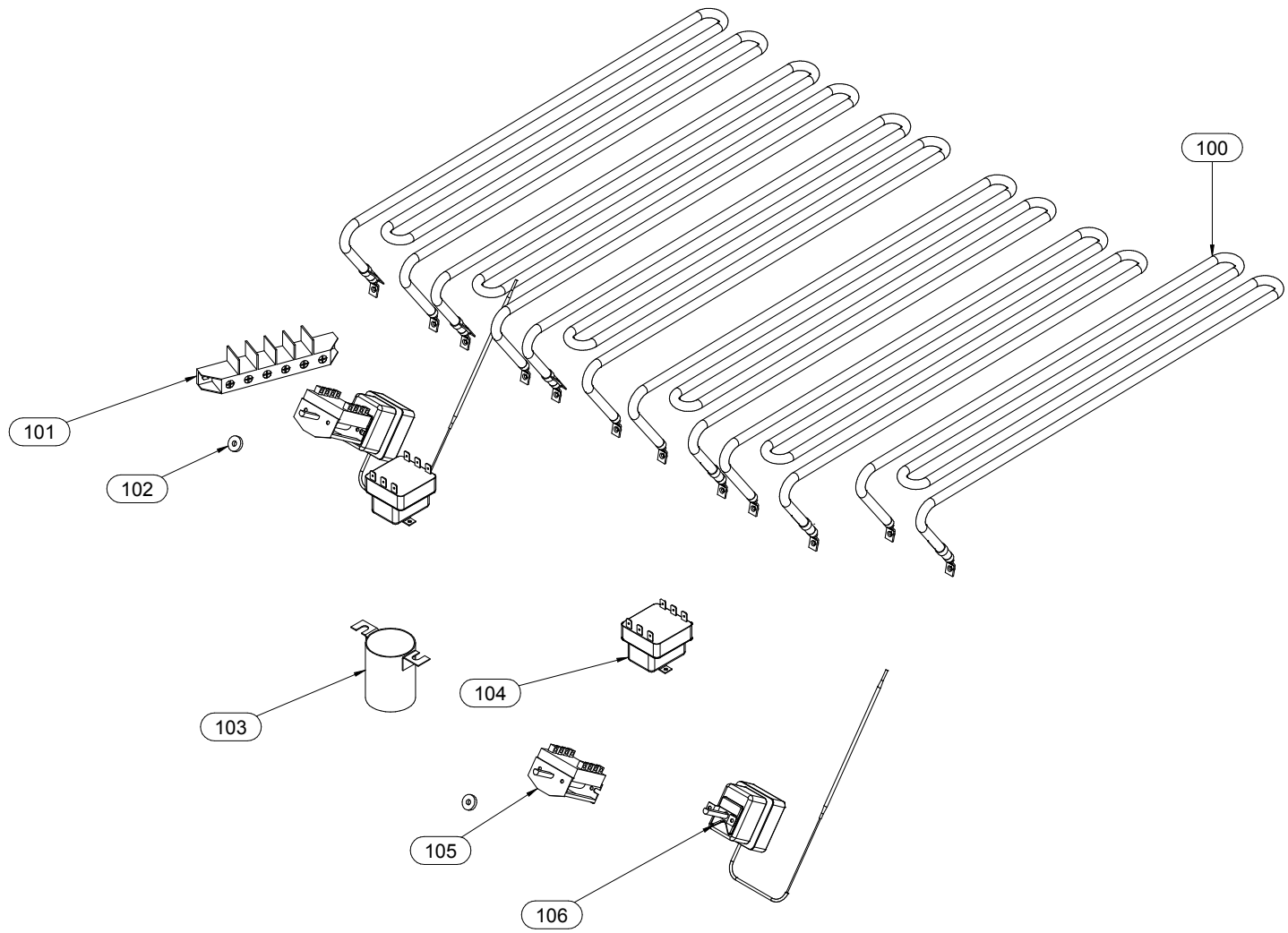

Mod./Type: **_70 - _90 .../40 ... - .../80 ... - .../120 ...**

**VANO / CABINET - ...B - ...BE - ...BH2**

cod./num. 2531578.00

data/date: 05/06/2014

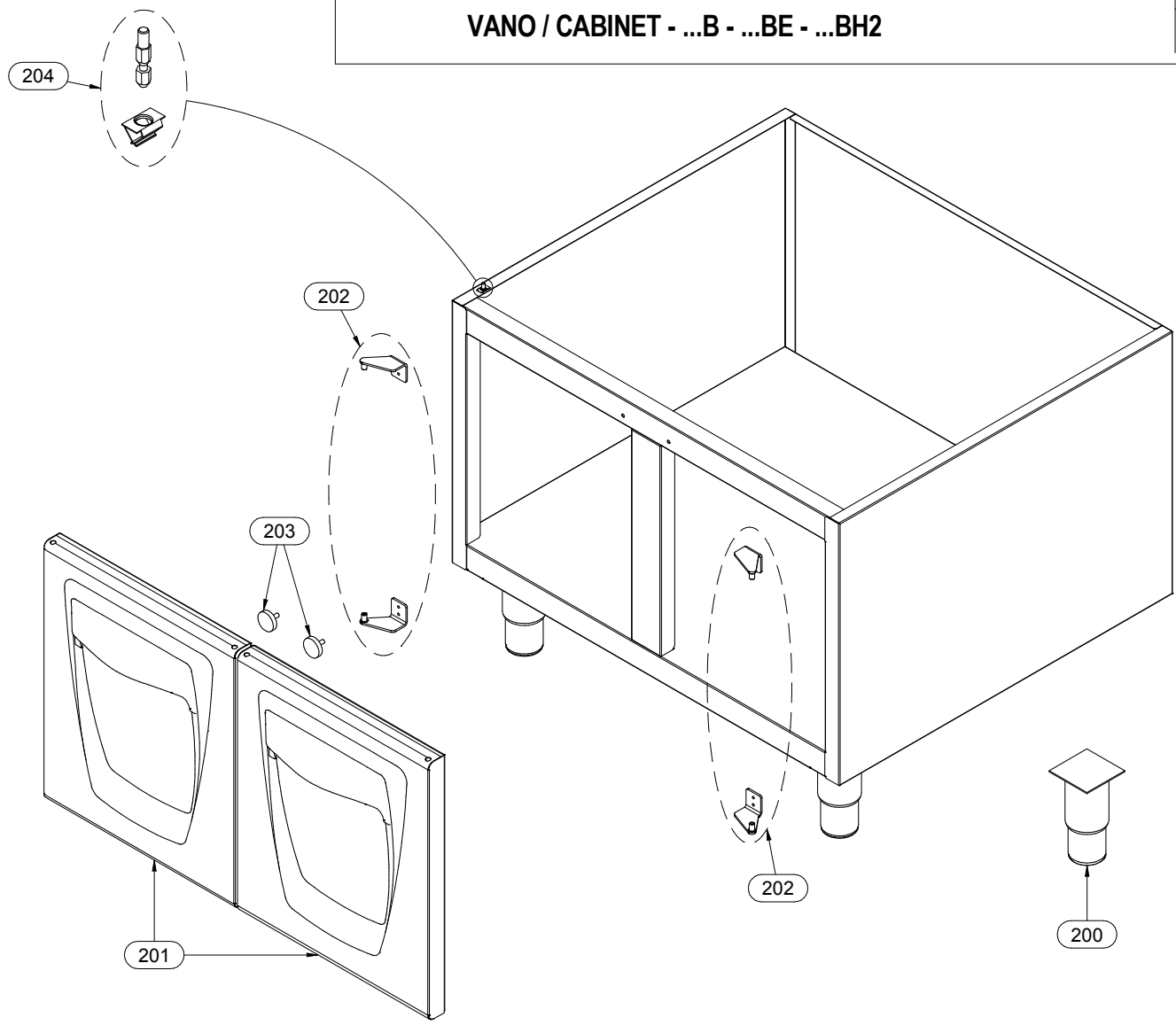

| Mod.: | _70/... FT...ES... - _90/... FT...ES... SIMPLE | | | cod. / num. 2531825.00<br>data / date 26/08/2014<br>rif. / ref. 2531824.00 | | RICAMBI CONSIGLIATI - RECOMMENDED SPARE PARTS - PIECES DETACHEES RECOMMANDEES - EMPFOHLENEN ERSATZTEILE | EM70/40 FT...ES... | EM70/80 FT...ES... | EM70/120 FT...ES... | EM90/40 FT...ES... | EM90/80 FT...ES... | EM90/120 FT...ES... | NOTE | |
|---|---|---|---|---|---|---|---|---|---|---|---|---|---|---|
| POS. | DESCRIZIONE | DESCRIPTION | DENOMINATION | BENENNUNG | COD. | | Q.ty | | | | | | | |
| 1 | CRUSCOTTO | CONTROL PANEL | BANDEAU | BEDIENBLENDE | 256.452.00 | | 1 | | | 1 | | | FROM: 15.12.2011 | TO: 14.07.2015 |
| | | | | | 256.452.13 | | 1 | | | 1 | | | FROM: 15.07.2015 | TO:.... |
| | | | | | 256.453.00 | | | 1 | | | 1 | | FROM: 15.12.2011 | TO: 14.07.2015 |
| | | | | | 256.453.13 | | | 1 | | | 1 | | FROM: 15.07.2015 | TO:.... |
| | | | | | 256.456.00 | | | | 1 | | | 1 | FROM: 15.12.2011 | TO: 14.07.2015 |
| | | | | | 256.456.13 | | | | 1 | | | 1 | FROM: 15.07.2015 | TO:.... |
| 2 | MARCHIO | BRAND NAME | MARQUE | MARKENZEICHEN | 982.021.00 | | 1 | 1 | 1 | 1 | 1 | 1 | FROM: 15.12.2011 | TO: 31.01.2014 |
| | | | | | 982.023.00 | | 1 | 1 | 1 | 1 | 1 | 1 | FROM: 01.02.2014 | TO:... |
| 3 | LAMPADA SPIA ARANCIO | ORANGE INDICATOR LIGHT | LAMPE TEMOIN ORANGE | ORANGE KONTROLLAMPE | 963.013.00 | | 1 | 2 | 3 | 1 | 2 | 3 | | |
| 4 | SERIGRAFIA | SCREEN PRINT | SÉRIGRAPHIE | SIEBDRUCK | 910.229.00 | | 1 | 2 | 3 | 1 | 2 | 3 | | |
| 5 | LABIRINTO | LABYRINTH | LABYRINTHE | LABYRINTH | 256.235.00 | | 1 | 2 | 3 | 1 | 2 | 3 | | |
| 6 | MANOPOLA | KNOB | BOUTON | DREHKNOPF | 256.234.00 | * | 1 | 2 | 3 | 1 | 2 | 3 | | |
| 7 | CASSETTO | DRAWER | TIROIR | SCHUBLADE | 6111248.00 | | 1 | | | 1 | | | | |
| | | | | | 6111249.00 | | | 1 | 2 | | 1 | 2 | | |
| 8 | PIEDINO | FOOT | PIED | STELLFUSS | 951.083.00 | | 4 | 4 | 4 | 4 | 4 | 4 | SOLO VERSIONE (-T) | ONLY (-T) VERSION |
| 9 | PIASTRINA GIUNZIONE | FIXING PLATE | PLAQUETTE FIXAGE | BEFESTIGUNGSPLATTE | 941.130.00 | | 1 | 1 | 1 | 1 | 1 | 1 | | |
| 10 | GRIGLIA CAMINO | FLUE GRIDDLE | GRILLE POUR CHEMINÉE | KAMINROST | 983.012.00 | | 1 | 2 | 2 | 1 | 2 | 2 | | |
| 11 | | | | | | | | | | | | | | |
| 12 | | | | | | | | | | | | | | |
| 13 | | | | | | | | | | | | | | |
| 14 | | | | | | | | | | | | | | |
| 15 | | | | | | | | | | | | | | |
| 16 | | | | | | | | | | | | | | |
| 17 | | | | | | | | | | | | | | |
| 18 | | | | | | | | | | | | | | |
| 19 | | | | | | | | | | | | | | |
| 20 | | | | | | | | | | | | | | |
| 21 | | | | | | | | | | | | | | |
| 22 | | | | | | | | | | | | | | |
| 23 | | | | | | | | | | | | | | |
| 24 | | | | | | | | | | | | | | |
| 25 | | | | | | | | | | | | | | |
| 26 | | | | | | | | | | | | | | |
| 27 | | | | | | | | | | | | | | |
| 28 | | | | | | | | | | | | | | |
| 29 | | | | | | | | | | | | | | |
| 30 | | | | | | | | | | | | | | |
| 31 | | | | | | | | | | | | | | |
| 32 | | | | | | | | | | | | | | |
| 33 | | | | | | | | | | | | | | |
| 34 | | | | | | | | | | | | | | |
| 35 | | | | | | | | | | | | | | |
| 36 | | | | | | | | | | | | | | |
| 37 | | | | | | | | | | | | | | |

| Mod.: | _90/... FT...E... EXTREME | | | cod. / num. 2532233.00<br>data / date 26/06/2015<br>rif. / ref. 2531635.00 | | RICAMBI CONSIGLIATI - RECOMMENDED SPARE PARTS - PIÈCES DÉTACHÉES RECOMMANDÉES - EMPFOHLENEN ERSATZTEILE | EM90/40 FT...E... | EM90/80 FT...E... | NOTE | |
|---|---|---|---|---|---|---|---|---|---|---|
| POS. | DESCRIZIONE | DESCRIPTION | DENOMINATION | BENENNUNG | COD. | | Q.ty | | | |
| 1 | CRUSCOTTO | CONTROL PANEL | BANDEAU | BEDIENBLENDE | 256.457.00 | | 1 | | FROM: 15.12.2011 | TO: 14.07.2015 |
| | | | | | 256.452.13 | | 1 | | FROM: 15.07.2015 | TO:.... |
| | | | | | 256.458.00 | | | 1 | FROM: 15.12.2011 | TO: 14.07.2015 |
| | | | | | 256.453.13 | | | 1 | FROM: 15.07.2015 | TO:.... |
| 2 | MARCHIO | BRAND NAME | MARQUE | MARKENZEICHEN | 982.021.00 | | 1 | 1 | FROM: 15.12.2011 | TO: 31.01.2014 |
| | | | | | 982.023.00 | | 1 | 1 | FROM: 01.02.2014 | TO:... |
| 3 | LAMPADA SPIA ARANCIO | ORANGE INDICATOR LIGHT | LAMPE TEMOIN ORANGE | ORANGE KONTROLLAMPE | 963.013.00 | | 1 | 2 | | |
| 4 | SERIGRAFIA | SCREEN PRINT | SÉRIGRAPHIE | SIEBDRUCK | 910.229.00 | | 1 | 2 | | |
| 5 | LABIRINTO | LABYRINTH | LABYRINTHE | LABYRINTH | 256.235.00 | | 1 | 2 | | |
| 6 | MANOPOLA | KNOB | BOUTON | DREHKNOPF | 256.234.00 | * | 1 | 2 | | |
| 7 | CASSETTO | DRAWER | TIROIR | SCHUBLADE | 6111127.13 | | 1 | | FROM: 15.12.2011 | TO: 14.07.2015 |
| | | | | | 6111248.00 | | 1 | | FROM: 15.07.2015 | TO:.... |
| | | | | | 6111129.13 | | | 1 | FROM: 15.12.2011 | TO: 14.07.2015 |
| | | | | | 6111249.00 | | | 1 | FROM: 15.07.2015 | TO:.... |
| 8 | PIEDINO | FOOT | PIED | STELLFUSS | 951.083.00 | | 4 | 4 | SOLO VERSIONE (-T) | ONLY (-T) VERSION |
| 9 | PIASTRINA GIUNZIONE | FIXING PLATE | PLAQUETTE FIXAGE | BEFESTIGUNGSPLATTE | 941.130.00 | | 1 | 1 | | |
| 10 | GRIGLIA CAMINO | FLUE GRIDDLE | GRILLE POUR CHEMINÉE | KAMINROST | 982.012.00 | | 1 | 2 | | |
| 11 | | | | | | | | | | |
| 12 | | | | | | | | | | |
| 13 | | | | | | | | | | |
| 14 | | | | | | | | | | |
| 15 | | | | | | | | | | |
| 16 | | | | | | | | | | |
| 17 | | | | | | | | | | |
| 18 | | | | | | | | | | |
| 19 | | | | | | | | | | |
| 20 | | | | | | | | | | |
| 21 | | | | | | | | | | |
| 22 | | | | | | | | | | |
| 23 | | | | | | | | | | |
| 24 | | | | | | | | | | |
| 25 | | | | | | | | | | |
| 26 | | | | | | | | | | |
| 27 | | | | | | | | | | |
| 28 | | | | | | | | | | |
| 29 | | | | | | | | | | |
| 30 | | | | | | | | | | |
| 31 | | | | | | | | | | |
| 32 | | | | | | | | | | |
| 33 | | | | | | | | | | |
| 34 | | | | | | | | | | |

| Mod.: | _70/... FT...ES... - _90/... FT...ES...<br>SIMPLE | | | cod. / num. 2531827.00<br>data / date 27/08/2014<br>rif. / ref. 2531826.00 | | RICAMBI CONSIGLIATI - RECOMMENDED SPARE PARTS - PIÈCES DÉTACHÉES RECOMMANDÉES - EMPFOHLENEN ERSATZTEILE | _70/40 FT...ES... | _70/80 FT...ES... | _70/120 FT...ES... | _90/40 FT...ES... | _90/80 FT...ES... | _90/120 FT...ES... | NOTE |
|---|---|---|---|---|---|---|---|---|---|---|---|---|---|
| POS. | DESCRIZIONE | DESCRIPTION | DENOMINATION | BENENNUNG | COD. | | Q.ty | | | | | | |
| 100 | RESISTENZA | HEATING ELEMENT | RESISTANCE | HEINZELEMENT | 665.095.12 | * | 3 | 6 | 9 | | | | |
| | | | | | 965.059.12 | * | | | | 3 | 6 | 9 | |
| 101 | MORSETTIERA | TERMINAL BOARD | BORNES | KLEMMENBRETT | M566050500 | | 1 | 1 | 1 | 1 | 1 | 1 | |
| 102 | GUARNIZIONE | WASHER | GUARNITURE | DICHTUNGSRING | 953.020.00 | | 1 | 2 | 3 | 1 | 2 | 3 | |
| 103 | TERMOSTATO SICUREZZA | SAFETY THERMOSTAT | THERMOSTAT DE SECURITE | TEMPERATURBEGRENZER | 661.115.00 | * | 1 | 2 | 3 | 1 | 2 | 3 | |
| 104 | COMMUTATORE | CHANGE-OVER SWITCH | COMMUTATEUR | UMSCHALTER | 661.000.00 | * | 1 | 2 | 3 | 1 | 2 | 3 | |
| 105 | TERMOSTATO | THERMOSTAT | THERMOSTAT | THERMOSTAT | 661.116.00 | * | 1 | 2 | 3 | 1 | 2 | 3 | |
| 106 | | | | | | | | | | | | | |
| 107 | | | | | | | | | | | | | |
| 108 | | | | | | | | | | | | | |
| 109 | | | | | | | | | | | | | |
| 110 | | | | | | | | | | | | | |
| 111 | | | | | | | | | | | | | |
| 112 | | | | | | | | | | | | | |
| 113 | | | | | | | | | | | | | |
| 114 | | | | | | | | | | | | | |
| 115 | | | | | | | | | | | | | |
| 116 | | | | | | | | | | | | | |
| 117 | | | | | | | | | | | | | |
| 118 | | | | | | | | | | | | | |
| 119 | | | | | | | | | | | | | |
| 120 | | | | | | | | | | | | | |
| 121 | | | | | | | | | | | | | |
| 122 | | | | | | | | | | | | | |
| 123 | | | | | | | | | | | | | |
| 124 | | | | | | | | | | | | | |
| 125 | | | | | | | | | | | | | |
| 126 | | | | | | | | | | | | | |
| 127 | | | | | | | | | | | | | |
| 128 | | | | | | | | | | | | | |
| 129 | | | | | | | | | | | | | |
| 130 | | | | | | | | | | | | | |
| 131 | | | | | | | | | | | | | |
| 132 | | | | | | | | | | | | | |
| 133 | | | | | | | | | | | | | |
| 134 | | | | | | | | | | | | | |
| 135 | | | | | | | | | | | | | |
| 136 | | | | | | | | | | | | | |
| 137 | | | | | | | | | | | | | |

| Mod.: | _70/... FT...E... - _90/... FT...E...<br>EXTREME | | | cod. / num. 2531638.00<br>data / date 27/08/2014<br>rif. / ref. 2531637.00 | | RICAMBI CONSIGLIATI - RECOMMENDED SPARE PARTS - PIECES DETACHEES RECOMMANDEES - EMPFOHLENEN ERSATZTEILE | _70/40 FT...E... | _70/80 FT...E... | _90/40 FT...E... | _90/80 FT...E... | NOTE | |
|---|---|---|---|---|---|---|---|---|---|---|---|---|
| POS. | DESCRIZIONE | DESCRIPTION | DENOMINATION | BENENNUNG | COD. | | Q.ty | | | | | |
| 100 | RESISTENZA | HEATING ELEMENT | RESISTANCE | HEINZELEMENT | 665.095.00 | * | 3 | 6 | | | FROM: 01.10.2012 | TO: 05.05.2014 |
| | | | | | 665.095.12 | * | 3 | 6 | | | FROM: 06.05.2014 | TO:.... |
| | | | | | 965.059.00 | * | | | 3 | 6 | FROM: 01.06.2012 | TO: 05.05.2014 |
| | | | | | 965.059.12 | * | | | 3 | 6 | FROM: 06.05.2014 | TO:.... |
| 101 | MORSETTIERA | TERMINAL BOARD | BORNES | KLEMMENBRETT | M566050500 | | 1 | 1 | 1 | 1 | | |
| 102 | GUARNIZIONE | WASHER | GUARNITURE | DICHTUNGSRING | 953.020.00 | | 1 | 2 | 1 | 2 | | |
| 103 | SCARICO | DRAIN | VIDANGE | ABLAUF | 931.198.00 | | - | - | 1 | 1 | FROM: 15.12.2011 | TO: 14.07.2015 |
| | | | | | 631.175.00 | | 1 | 1 | 1 | 1 | FROM: 15.07.2015 | TO:.... |
| 104 | TERMOSTATO SICUREZZA | SAFETY THERMOSTAT | THERMOSTAT DE SECURITE | TEMPERATURBEGRENZER | 661.115.00 | * | 1 | 2 | 1 | 2 | | |
| 105 | COMMUTATORE | CHANGE-OVER SWITCH | COMMUTATEUR | UMSCHALTER | 661.000.00 | * | 1 | 2 | 1 | 2 | | |
| 106 | TERMOSTATO | THERMOSTAT | THERMOSTAT | THERMOSTAT | 661.116.00 | * | 1 | 2 | 1 | 2 | | |
| 107 | | | | | | | | | | | | |
| 108 | | | | | | | | | | | | |
| 109 | | | | | | | | | | | | |
| 110 | | | | | | | | | | | | |
| 111 | | | | | | | | | | | | |
| 112 | | | | | | | | | | | | |
| 113 | | | | | | | | | | | | |
| 114 | | | | | | | | | | | | |
| 115 | | | | | | | | | | | | |
| 116 | | | | | | | | | | | | |
| 117 | | | | | | | | | | | | |
| 118 | | | | | | | | | | | | |
| 119 | | | | | | | | | | | | |
| 120 | | | | | | | | | | | | |
| 121 | | | | | | | | | | | | |
| 122 | | | | | | | | | | | | |
| 123 | | | | | | | | | | | | |
| 124 | | | | | | | | | | | | |
| 125 | | | | | | | | | | | | |
| 126 | | | | | | | | | | | | |
| 127 | | | | | | | | | | | | |
| 128 | | | | | | | | | | | | |
| 129 | | | | | | | | | | | | |
| 130 | | | | | | | | | | | | |
| 131 | | | | | | | | | | | | |
| 132 | | | | | | | | | | | | |
| 133 | | | | | | | | | | | | |
| 134 | | | | | | | | | | | | |

| Mod.: | _70/... - _90/…<br>VANO / CABINET<br>…B - …BE - …BH2 | | | cod. / num. 2531579.00<br>data / date 05/06/2014<br>rif. / ref. 2531578.00 | | RICAMBI CONSIGLIATI - RECOMMENDED SPARE PARTS - PIÈCES DÉTACHÉES RECOMMANDÉES - EMPFOHLENEN ERSATZTEILE | EM70/40 ... | EM70/80 ... | EM70/120 ... | EM90/40 ... | EM90/80 ... | EM90/120 ... | NOTE | |
|---|---|---|---|---|---|---|---|---|---|---|---|---|---|---|
| POS. | DESCRIZIONE | DESCRIPTION | DENOMINATION | BENENNUNG | COD. | | Q. ty | | | | | | | |
| 200 | PIEDINO | FOOT | PIED | STELLFUSS | 912.090.00 | | 4 | 4 | 4 | 4 | 4 | 4 | FROM: 15.12.2011 | TO: 17.05.2013 |
| | | | | | 912.090.14 | | 4 | 4 | 4 | 4 | 4 | 4 | FROM: 18.05.2013 | TO:... |
| 201 | PORTA | DOOR | PORTE | TÜR | 256.215.00 | | 1 | 2 | 3 | 1 | 2 | 3 | | |
| 202 | COPPIA CERNIERE | GASKETS PAIR | COUPLE CHARNIÈRES | SCHARNIERPAAR | 256.216.00 | | 1 | 2 | 3 | 1 | 2 | 3 | | |
| 203 | MAGNETE | MAGNET | MAGNÉTO | MAGNET | 684.007.00 | | 1 | 2 | 3 | 1 | 2 | 3 | FROM: 15.12.2011 | TO: 01.01.2014 |
| | | | | | 984.006.00 | | 1 | 2 | 3 | 1 | 2 | 3 | FROM: 02.01.2014 | TO:... |
| 204 | FISSAGGIO | FIXING | FIXAGE | BEFESTIGUNG | 256.431.00 | | 4 | 4 | 4 | 4 | 4 | 4 | FROM: 04.05.2015 | TO:... |
| 205 | | | | | | | | | | | | | | |
| 206 | | | | | | | | | | | | | | |
| 207 | | | | | | | | | | | | | | |
| 208 | | | | | | | | | | | | | | |
| 209 | | | | | | | | | | | | | | |
| 210 | | | | | | | | | | | | | | |
| 211 | | | | | | | | | | | | | | |
| 212 | | | | | | | | | | | | | | |
| 213 | | | | | | | | | | | | | | |
| 214 | | | | | | | | | | | | | | |
| 215 | | | | | | | | | | | | | | |
| 216 | | | | | | | | | | | | | | |
| 217 | | | | | | | | | | | | | | |
| 218 | | | | | | | | | | | | | | |
| 219 | | | | | | | | | | | | | | |
| 220 | | | | | | | | | | | | | | |
| 221 | | | | | | | | | | | | | | |
| 222 | | | | | | | | | | | | | | |
| 223 | | | | | | | | | | | | | | |
| 224 | | | | | | | | | | | | | | |
| 225 | | | | | | | | | | | | | | |
| 226 | | | | | | | | | | | | | | |
| 227 | | | | | | | | | | | | | | |
| 228 | | | | | | | | | | | | | | |
| 229 | | | | | | | | | | | | | | |
| 230 | | | | | | | | | | | | | | |
| 231 | | | | | | | | | | | | | | |
| 232 | | | | | | | | | | | | | | |
| 233 | | | | | | | | | | | | | | |
| 234 | | | | | | | | | | | | | | |