Mod./Type:	_70/... CPG EXTREME	cod./num.	2531707.00
		data/date:	21/06/2014

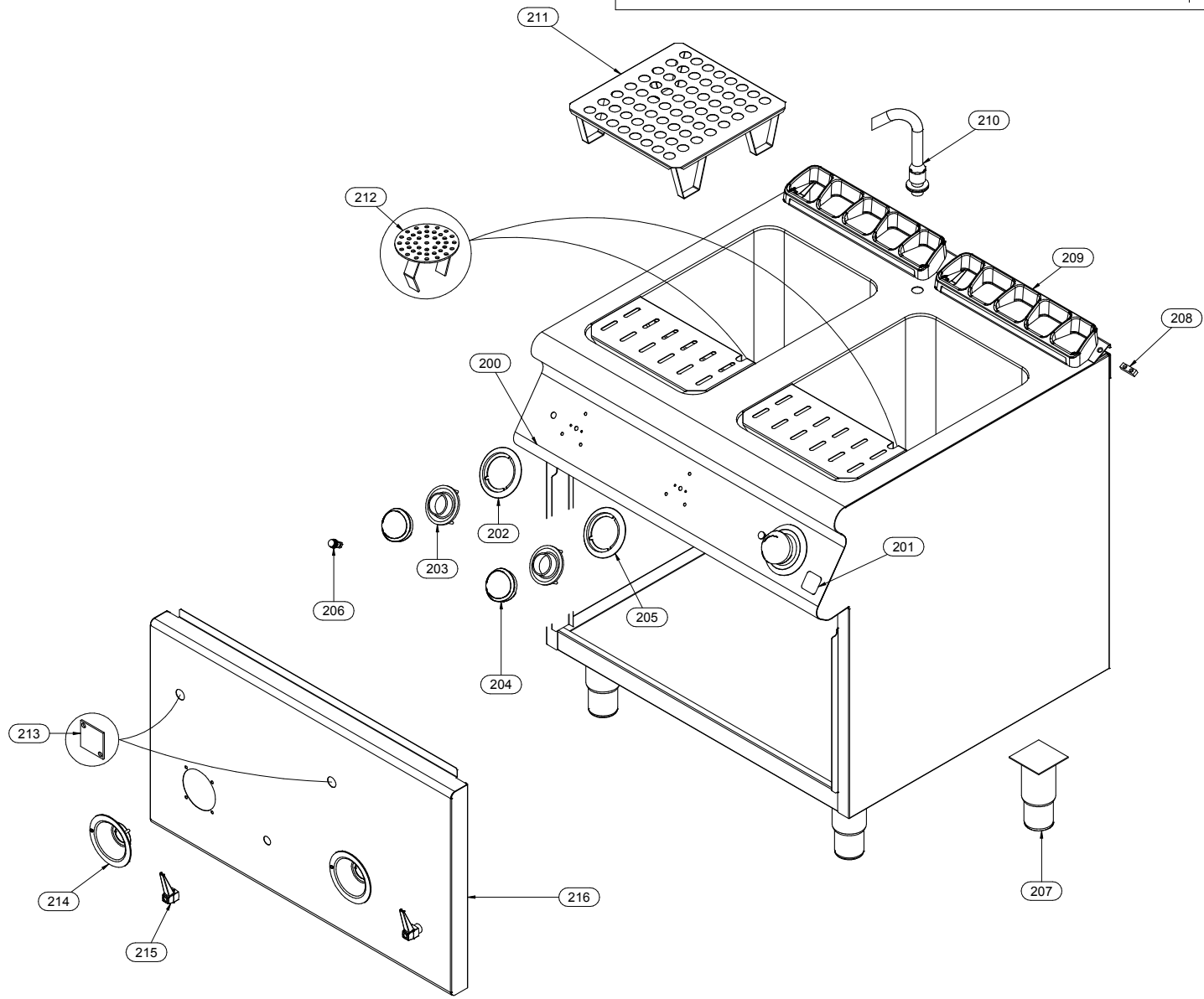

Mod./Type:	_70/... CPG EXTREME	cod./num.	2531709.00
		data/date:	21/06/2014

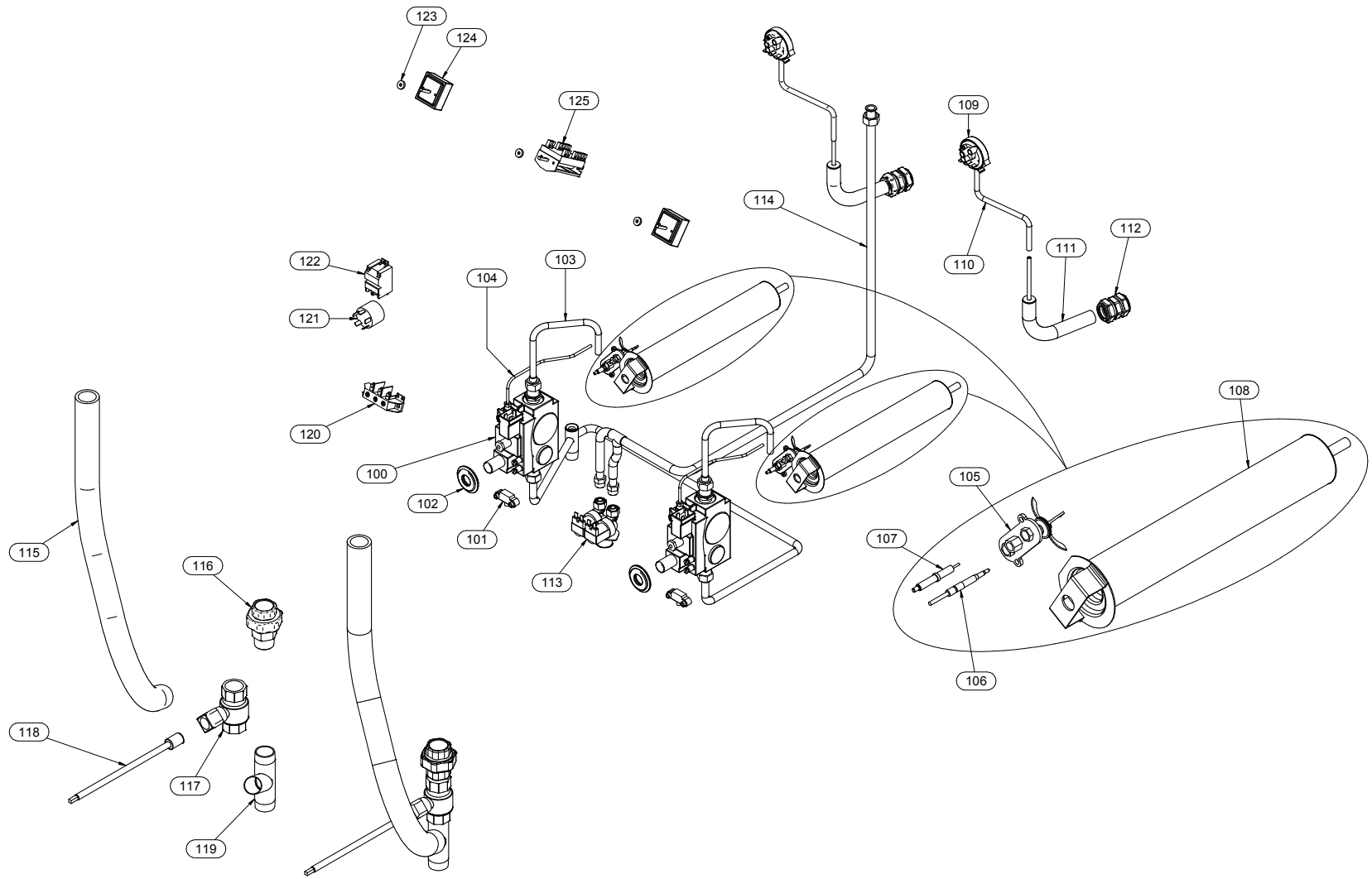

Mod./Type: **_70 - _90 .../40 ... - .../80 ... - .../120 ...**

VANO / CABINET - ...B - ...BE - ...BH2

cod./num. 2531578.00

data/date: 05/06/2014

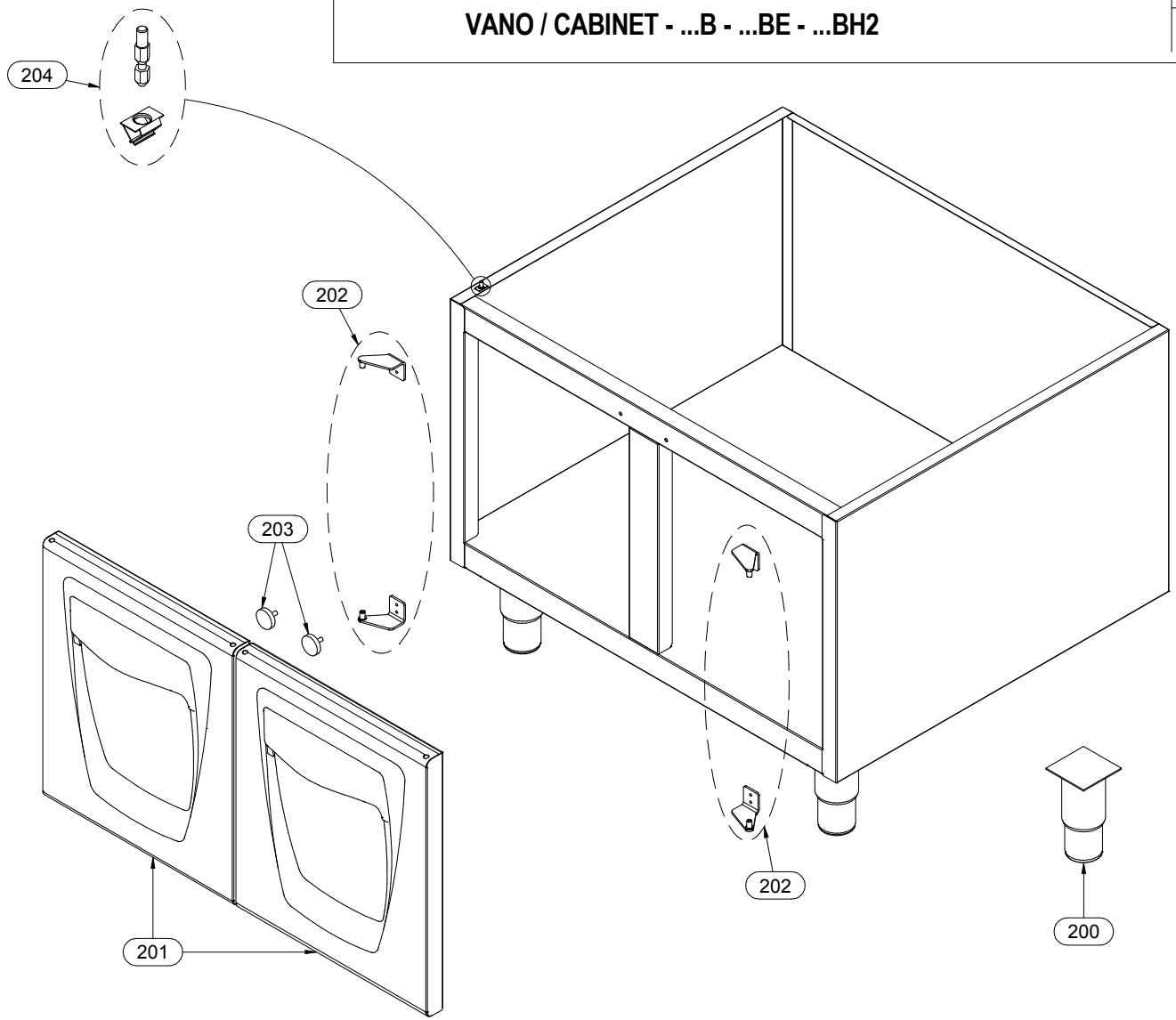

Mod.:	_70/... CPG EXTREME			cod. / num. 2531710.00 data / date 23/07/2014 rif. / ref. 2531709.00		_70/40 CPG	_70/80 CPG	NOTE	
POS.	DESCRIZIONE	DESCRIPTION	DENOMINATION	BENENNUNG	COD.	Q. ty			
100	VALVOLA GAS	GAS VALVE	SOUPAPE GAZ	GAS VENTIL	256.336.00	1	2		
101	IMPULSO ACCENSIONE	IGNITION PULSE	IMPULSION ALLUMAGE	EINSCHALTEN DRÜCK-TASTE	968.501.00	1	2		
102	GUARNIZIONE	WASHER	GUARNITURE	DICHTUNGSRING	953.018.00	1	2		
103	TUBO GAS	GAS PIPE	TUBE GAZ	GASROHR	256.305.00	1	2		
104	TUBO GAS	GAS PIPE	TUBE GAZ	GASROHR	256.306.00	1	2		
105	GRUPPO PILOTA	PILOT GROUP	GROUPE VEILLEUSE	ZÜNDBRENNER GRUPPE	672.042.00	1	2		
106	TERMOCOPPIA	THERMOCOUPLE	THERMOCOUPLE	THERMOELEMENT	672.025.00	1	2		
107	CANDELA ACCENSIONE	IGNITION ELECTRODE	BOUGIE D'ALLUMAGE	KERZE SCHNELLBRENNER	256.017.00	1	2		
108	BRUCIATORE	BURNER	BRULEUR	BRENNER	672.169.00	1	2		
109	PRESSOSTATO	PRESSURE SWITCH	PRESSOSTAT	NIVEAUSCHALTER	462.018.00	1	2		
110	TUBO PRESSOSTATO	PRESSURE SWITCH PIPE	TUYAU PRESSOSTAT	NIVEAUSCHALTERTUBE	0831.0407.00	0,25	0,45	U. M. metri	U. M. meters
111	TUBO PRESSOSTATO	PRESSURE SWITCH PIPE	TUYAU PRESSOSTAT	NIVEAUSCHALTERTUBE	931.200.00	1	2		
112	RACCORDO	CONNECTOR	RACCORD	ANSCHLUSS	678.074.00	1	2		
113	ELETTROVALVOLA ACQUA	SOLENOID VALVE WATER	ELECTROVANNE EAU	WASSERVENTIL	256.308.00	1	1		
114	TUBO CARICO	INLET HOSE	TUYAU DE CHARGEMENT	BELASTUNG-ROHR	631.177.00	1			
					631.184.00		1		
115	SCARICO TROPPOPIENO	OVERFLOW WATER OUTLET	VIDANGE DU TROP-PLEIN	ABLAUF DES ÜBERLAUFS	0831.2027.00	0,9	1,8	U. M. metri	U. M. meters
116	RACCORDO	CONNECTOR	RACCORD	ANSCHLUSS	0716.10080.0	1	2		
117	VALVOLA	VALVE	SOUPAPE	VENTIL	678.075.00	1	2		
118	PROLUNGA VALVOLA	VALVE EXTENSION	RALLONGE SOUPAPE	VENTIL VERLÄNGERUNG	256.303.00	1	2		
119	TUBO SCARICO	EXHAUST PIPE	TUYAU D'ÉCHAPPEMENT	ABLAUFROHR	931.203.00	1	2		
120	MORSETTIERA	TERMINAL BOARD	BORNES	KLEMMENBRETT	M566050000	1	1		
121	FILTRO ANTIDISTURBO	LIMITER FILTER	FILTRE DE BRUIT	ANTIJAMMING FILTER	661.120.00	1	1		
122	ACCENDITORE	ELECTRONIC LIGHTER	ALLUMEUR ELECTRONIQUE	ELEKTRONISCHER ZUENDER	961.030.00	1	1		
123	GUARNIZIONE	WASHER	GUARNITURE	DICHTUNGSRING	953.020.00	2	3		
124	REGOLATORE ENERGIA	ENERGY REGULATOR	REGLEUR D'ENERGIE	ENERGIEREGLER	661.058.00	1	2		
125	COMMUTATORE	CHANGE-OVER SWITCH	COMMUTATEUR	UMSCHALTER	661.117.00	1	1		
126									
127									
128									
129									
130									
131									
132									
133									

Mod.:	_70/... CPG			cod. / num. 2531708.00 data / date 21/06/2014 rif. / ref. 2531707.00		RICAMBI CONSIGLIATI - RECOMMENDED SPARE PARTS - PIÈCES DÉTACHÉES RECOMMANDÉES - EMPFOHLENEN ERSATZTEILE	EM70/40 CPG	EM70/80 CPG	NOTE	
POS.	DESCRIZIONE	DESCRIPTION	DENOMINATION	BENENNUNG	COD.		Q. ty			
200	CRUSCOTTO	CONTROL PANEL	BANDEAU	BEDIENBLENDE	9111307.00		1			
					6111289.00			1		
201	MARCHIO	BRAND NAME	MARQUE	MARKENZEICHEN	982.021.00		1	1	**FROM: 15.12.2011**	**TO: 31.01.2014**
					982.023.00		1	1	**FROM: 01.02.2014**	**TO:...**
202	SERIGRAFIA	SCREEN PRINT	SÉRIGRAPHIE	SIEBDRUCK	910.230.00		1	2		
203	LABIRINTO	LABYRINTH	LABYRINTHE	LABYRINTH	256.235.00		2	3		
204	MANOPOLA	KNOB	BOUTON	DREHKNOPF	256.234.00	*	2	3		
205	SERIGRAFIA	SCREEN PRINT	SÉRIGRAPHIE	SIEBDRUCK	910.169.00		1	1		
206	LAMPADA SPIA ARANCIO	ORANGE INDICATOR LIGHT	LAMPE TEMOIN ORANGE	ORANGE KONTROLLAMPE	963.013.00		1	2		
207	PIEDINO	FOOT	PIED	STELLFUSS	912.090.00		4	4	**FROM: 15.12.2011**	**TO: 17.05.2013**
					912.090.14		4	4	**FROM: 18.05.2013**	**TO:...**
208	PIASTRINA GIUNZIONE	FIXING PLATE	PLAQUETTE FIXAGE	BEFESTIGUNGSPLATTE	941.130.00		1	1		
209	GRIGLIA CAMINO	FLUE GRIDDLE	GRILLE POUR CHEMINÉE	KAMINROST	982.012.00		1	2		
210	TUBO CARICO	INLET HOSE	TUYAU DE CHARGEMENT	BELASTUNG-ROHR	678.008.00		1	1		
211	FALSOFONDO	FALSE BOTTOM	FAUX-FOND	ABTROPFPLATTE	6111186.00		1	2	**FROM: 15.12.2011**	**TO: 21.10.2013**
					6111186.15		1	2	**FROM: 22.10.2013**	**TO:...**
212	FILTRO SCARICO	EXHAUST FILTER	FILTRE D'ECHAPPEMENT	ABLAUFFILTER	611.266.00		1	2		
213	VETRO ISPEZIONE	INSPECTION GLASS	VIDRE DE CONTRÔLE	AUFSICHT GLASS	951.051.00		1	2		
214	PROTEZIONE VALVOLA	VALVE PROTECTION	PROTECTION SOUPAPE	SCHUTZVENTIL	256.304.00		1	2		
215	MANIGLIA	HANDLE	POIGNÉE	HANDGRIFF	M538000300		1	2		
216	PANNELLO FRONTALE	FRONTAL PANEL	PANNEAU FRONTAL	FRONTPLATTE	6111200.00		1			
					6111201.00			1		
217										
218										
219										
220										
221										
222										
223										
224										
225										
226										
227										
228										
229										
230										
231										
232										

Mod.:	_70/... - _90/… VANO / CABINET …B - …BE - …BH2			cod. / num. 2531579.00 data / date 05/06/2014 rif. / ref. 2531578.00		RICAMBI CONSIGLIATI - RECOMMENDED SPARE PARTS - PIÈCES DÉTACHÉES RECOMMANDÉES - EMPFOHLENEN ERSATZTEILE	EM70/40 ...	EM70/80 ...	EM70/120 ...	EM90/40 ...	EM90/80 ...	EM90/120 ...	NOTE	
POS.	DESCRIZIONE	DESCRIPTION	DENOMINATION	BENENNUNG	COD.		Q. ty							
200	PIEDINO	FOOT	PIED	STELLFUSS	912.090.00		4	4	4	4	4	4	FROM: 15.12.2011	TO: 17.05.2013
					912.090.14		4	4	4	4	4	4	FROM: 18.05.2013	TO:...
201	PORTA	DOOR	PORTE	TÜR	256.215.00		1	2	3	1	2	3		
202	COPPIA CERNIERE	GASKETS PAIR	COUPLE CHARNIÈRES	SCHARNIERPAAR	256.216.00		1	2	3	1	2	3		
203	MAGNETE	MAGNET	MAGNÉTO	MAGNET	684.007.00		1	2	3	1	2	3	FROM: 15.12.2011	TO: 01.01.2014
					984.006.00		1	2	3	1	2	3	FROM: 02.01.2014	TO:...
204	FISSAGGIO	FIXING	FIXAGE	BEFESTIGUNG	256.431.00		4	4	4	4	4	4	FROM: 04.05.2015	TO:...
205														
206														
207														
208														
209														
210														
211														
212														
213														
214														
215														
216														
217														
218														
219														
220														
221														
222														
223														
224														
225														
226														
227														
228														
229														
230														
231														
232														
233														
234														