DESPIECE TECNICO

# Hornos Mixtos
# Fours Mixtes
# Combi Ovens
# HeiBluftdämpfer
# Forno Misti

**Modelos:**

**HMM-20/21**
**HME-20/21**
**HMP-20/21**

**VECM-20/21**
**VECE-20/21**
**VECP-20/21**

**HMM-20/21 UL**

***Noviembre 2003 November***

FAGOR

**Fagor Industrial**

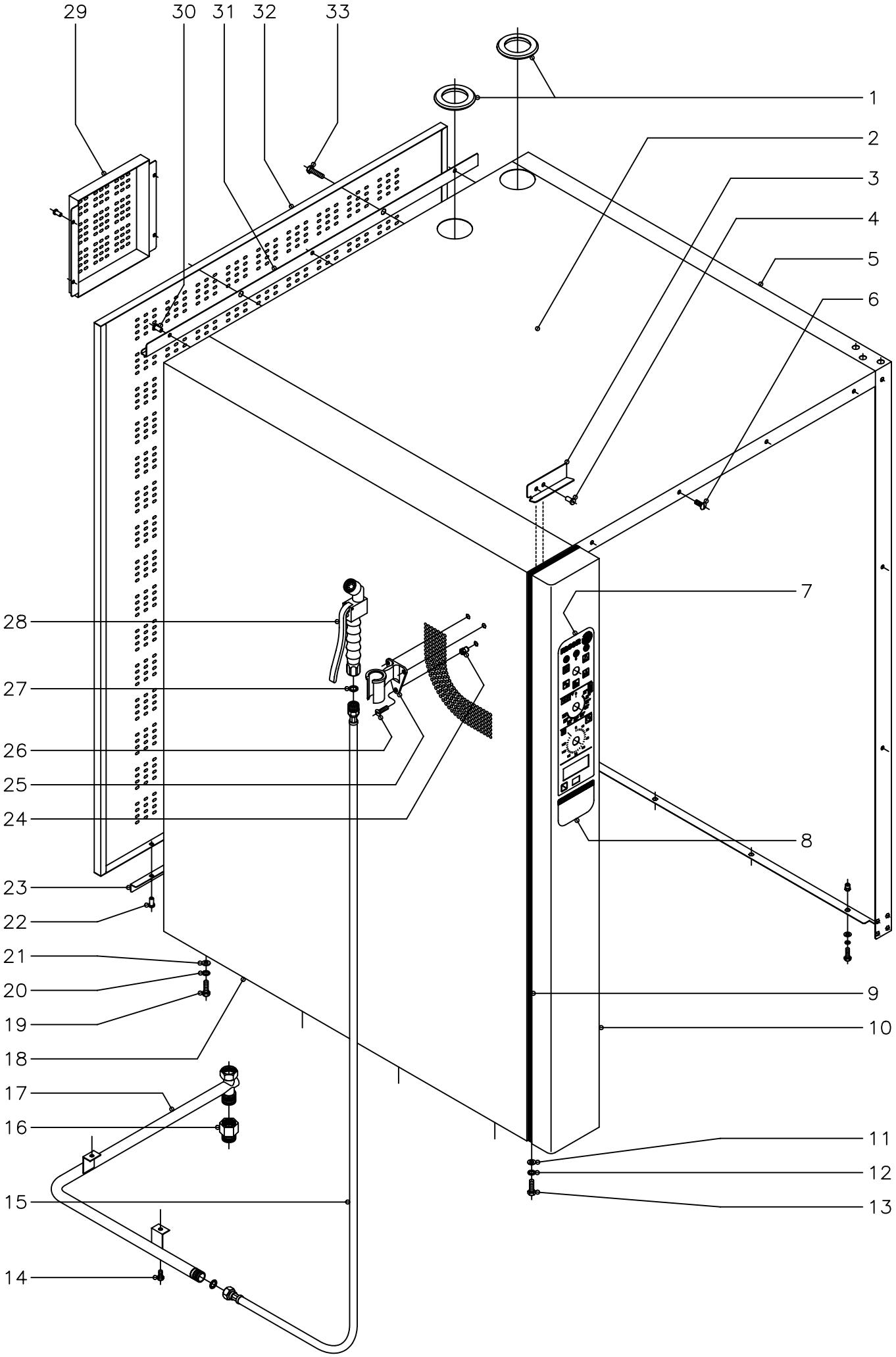


| N plano | Firma | Fecha | Aparato | Lamina | |
|---|---|---|---|---|---|
| C−1469 | | 11−2003 | MUEBLE<br>HORNOS HMM, HME, HMP−20/21 | 1 | Fagor Industrial S.Coop.<br>Oñate FAGOR |

| MOD. | HORNOS : HMM, HME, HMP-20/21 | ZONA | MUEBLE | PLANO | C-1469 |
|---|---|---|---|---|---|

| ITEM | CODIGO | DENOMINACION | TEXTO | HMM-20/21 HMM-2-20/11 | HME-20/21 HME-2-20/11 | HMP-20/21 HMP-2-20/11 | HMM-20/21UL | | | | | | NOTAS |
|---|---|---|---|---|---|---|---|---|---|---|---|---|---|
| 1 | R662813 | Pasamuros chimenea | | 2 | 2 | 2 | 2 | | | | | | |
| 2 | R142832 | Panel superior | | 1 | 1 | 1 | 1 | | | | | | |
| | Q221343 | Remache exagonal M-6 | | 4 | 4 | 4 | 4 | | | | | | Amarre panel superior a laterales |
| | Q232040 | Arandela plana A-6 | | 4 | 4 | 4 | 4 | | | | | | Amarre panel superior a laterales |
| | Q262040 | Arandela muelle A-6 | | 4 | 4 | 4 | 4 | | | | | | Amarre panel superior a laterales |
| | Q012042 | Tornillo exagonal M-6x15 | | 4 | 4 | 4 | 4 | | | | | | Amarre panel superior a laterales |
| 3 | R662811 | Fijacion portamandos | | 1 | 1 | 1 | 1 | | | | | | |
| 4 | Q412002 | Remache tubular Ø 4x7,5 | | 2 | 2 | 2 | 2 | | | | | | |
| 5 | R142831 | Panel lateral derecho | | 1 | 1 | 1 | 1 | | | | | | |
| 6 | Q152017 | Tornillo amarre M-6x13 | | 7 | 7 | 7 | 7 | | | | | | |
| 7 | R743012 | Serigrafia superior ( controlador ) | | 1 | - | - | - | | | | | | |
| 7 | R673000 | Serigrafia superior ( controlador ) | | - | 1 | 1 | - | | | | | | |
| 7 | R743070 | Serigrafia superior ( controlador ) | | - | - | - | 1 | | | | | | |
| 8 | R693000 | Serigrafia inferior ( conmutador ) | | 1 | - | - | 1 | | | | | | |
| 8 | R663014 | Serigrafia inferior ( neutra ) | | - | 1 | - | - | | | | | | |
| 8 | R663010 | Serigrafia inferior ( programador ) | | - | - | 1 | - | | | | | | |
| 9 | 3715400 | Junta panel portamandos L=130 | | 1 | 1 | 1 | 1 | | | | | | |
| 9 | 3715400 | Junta panel portamandos L=1400 | | 2 | 2 | 2 | 2 | | | | | | |
| 10 | R772805 | Panel portamandos | | 1 | - | - | 1 | | | | | | |
| 10 | R092837 | Panel portamandos | | - | 1 | 1 | - | | | | | | |
| 11 | Q232040 | Arandela plana A-6 | | 2 | 2 | 2 | 2 | | | | | | |
| 12 | Q262040 | Arandela muelle A-6 | | 2 | 2 | 2 | 2 | | | | | | |
| 13 | Q012042 | Tornillo exagonal M-6x15 | | 2 | 2 | 2 | 2 | | | | | | |
| 14 | Q012042 | Tornillo exagonal M-6x15 | | * | 1 | 1 | 1 | | | | | | * Opcional bajo pedido |
| 15 | R095006 | Flexible de ducha | | * | 1 | 1 | 1 | | | | | | * Opcional bajo pedido |
| 16 | T125033 | Adaptador a rosca UL | | - | - | - | 1 | | | | | | |
| 17 | R145041 | Suplemento ducha | | * | 1 | 1 | 1 | | | | | | * Opcional bajo pedido |
| 18 | R142807 | Panel lateral izquierdo | | 1 | 1 | 1 | 1 | | | | | | |
| 19 | Q012042 | Tornillo exagonal M-6x15 | | 8 | 8 | 8 | 8 | | | | | | |

| MOD. | HORNOS : HMM, HME, HMP-20/21 | ZONA | MUEBLE | PLANO | C-1469 |
|---|---|---|---|---|---|

| ITEM | CODIGO | DENOMINACION | TEXTO | HMM-20/21 HMM-2-20/11 | HME-20/21 HME-2-20/11 | HMP-20/21 HMP-2-20/11 | HMM-20/21UL | | | | | NOTAS |
|---|---|---|---|---|---|---|---|---|---|---|---|---|
| 20 | Q262040 | Arandela muelle A-6 | | 8 | 8 | 8 | 8 | | | | | |
| 21 | Q232040 | Arandela plana A-6 | | 8 | 8 | 8 | 8 | | | | | |
| 22 | Q412002 | Remache tubular Ø 4x7,5 | | 4 | 4 | 4 | 4 | | | | | |
| 23 | R142804 | Fijacion panel posterior | | 2 | 2 | 2 | 2 | | | | | |
| 24 | Q221341 | Remache exagonal M-4 | | * | 3 | 3 | 3 | | | | | * Opcional bajo pedido |
| 25 | R095007 | Soporte de ducha | | * | 1 | 1 | 1 | | | | | * Opcional bajo pedido |
| 26 | Q042022 | Tornillo avellanado M-4x15 | | * | 3 | 3 | 3 | | | | | * Opcional bajo pedido |
| 27 | Q306024 | Arandela junta Ø18xØ12,5x1,5 | | * | 2 | 2 | 2 | | | | | * Opcional bajo pedido |
| 28 | R095005 | Cuerpo de ducha | | * | 1 | 1 | 1 | | | | | * Opcional bajo pedido |
| 29 | R092822 | Tapa ventilacion motor | | 2 | 2 | 2 | 2 | | | | | |
| | Q412002 | Remache tubular Ø 4x7,5 | | 8 | 8 | 8 | 8 | | | | | |
| 30 | Q412002 | Remache tubular Ø 4x7,5 | | 3 | 3 | 3 | 3 | | | | | |
| 31 | R142825 | Protector superior | | 1 | 1 | 1 | 1 | | | | | |
| 32 | R142827 | Panel posterior exterior | | 1 | 1 | 1 | 1 | | | | | |
| 33 | Q012044 | Tornillo amarre M-6X25 | | 2 | 2 | 2 | 2 | | | | | |
| | Q221343 | Remache exagonal M-6 | | 2 | 2 | 2 | 2 | | | | | |

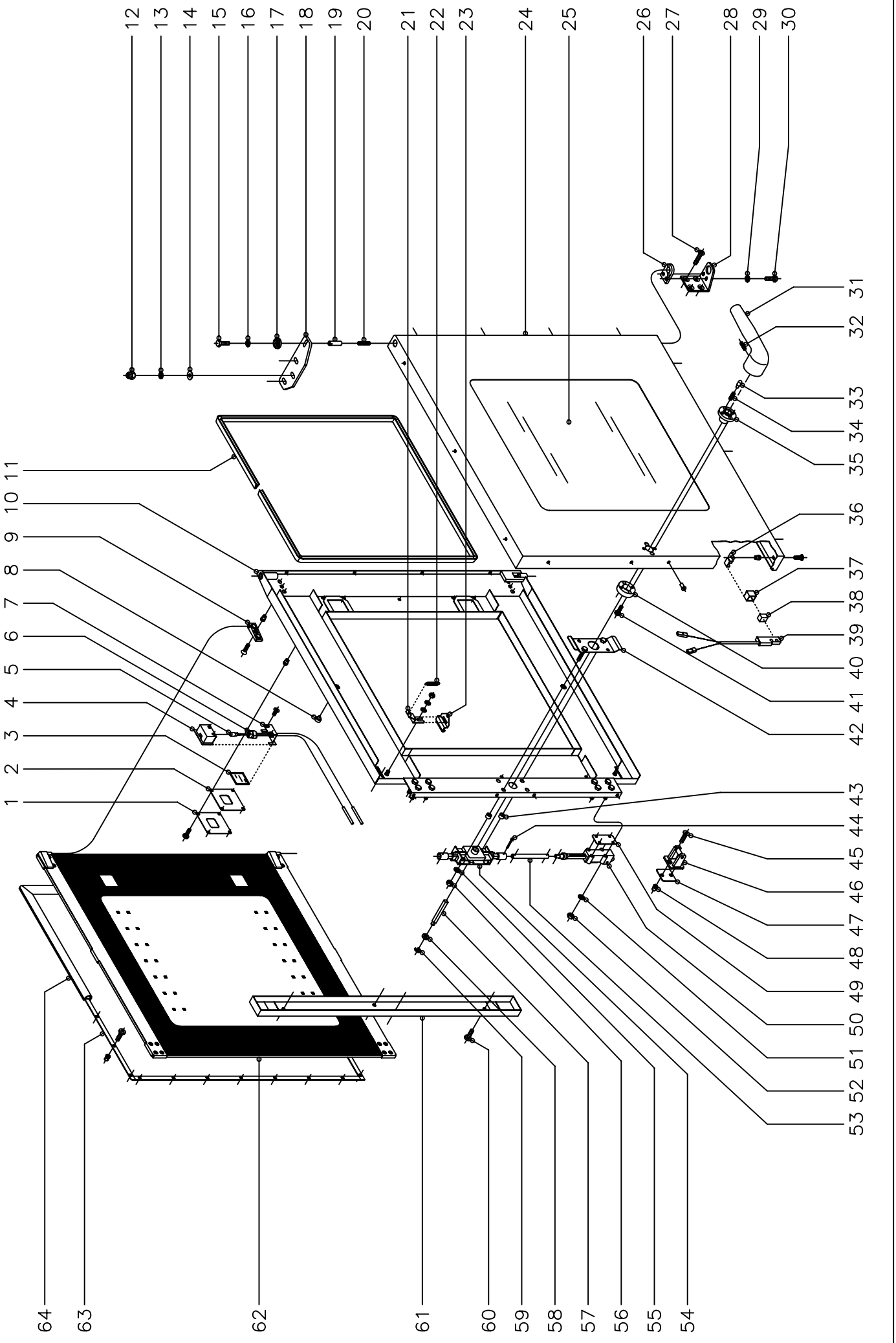


| N plano | Firma | Fecha | Aparato | Lamina | |
|---|---|---|---|---|---|
| C−1470 | | 11−2003 | PUERTA<br>HORNOS HMM, HME, HMP−20/21 | 2 | Fagor Industrial S.Coop.<br>Oñate |

| MOD. | HORNOS : HMM, HME, HMP-20/21 | ZONA | PUERTA | PLANO | C-1470 |
|---|---|---|---|---|---|

| ITEM | CODIGO | DENOMINACION | TEXTO | HMM-20/21 HMM-2-20/11 | HME-20/21 HME-2-20/11 | HMP-20/21 HMP-2-20/11 | HMM-20/21UL | | | | | | NOTAS |
|---|---|---|---|---|---|---|---|---|---|---|---|---|---|
| 1100002598 | | KIT Puerta completa 20/21 | | 1 | 1 | 1 | 1 | | | | | | |
| | | | | | | | | | | | | | |
| 1 | R670608 | Tapa cierre lampara | | 2 | 2 | 2 | 2 | | | | | | |
| | Q152004 | Tornillo alomado M-5x13 | | 8 | 8 | 8 | 8 | | | | | | |
| | Q222011 | Remache exagonal M-5 | | 8 | 8 | 8 | 8 | | | | | | |
| 2 | R670609 | Junta cierre lampara | | 2 | 2 | 2 | 2 | | | | | | |
| 3 | R670618 | Cristal de lampara | | 2 | 2 | 2 | 2 | | | | | | |
| 4 | R670610 | Deflector de lampara | | 2 | 2 | 2 | 2 | | | | | | |
| 5 | R663013 | Lampara 10 W. 12 V. | | 2 | 2 | 2 | 2 | | | | | | |
| 6 | R663058 | Portalamparas | | 2 | 2 | 2 | 2 | | | | | | |
| 7 | R670611 | Suplemento deflector | | 2 | 2 | 2 | 2 | | | | | | |
| | Q042031 | Tornillo avellanado M-5x10 | | 4 | 4 | 4 | 4 | | | | | | |
| 8 | R670617 | Tope cristal interior | | 8 | 8 | 8 | 8 | | | | | | |
| 9 | R670615 | Base de bisagra | | 2 | 2 | 2 | 2 | | | | | | |
| | Q042032 | Tornillo avellanado M-5x15 | | 2 | 2 | 2 | 2 | | | | | | |
| | Q222011 | Remache exagonal M-5 | | 2 | 2 | 2 | 2 | | | | | | |
| 10 | R140500 | Contrapuerta completa 20/21 | | 1 | 1 | 1 | 1 | | | | | | |
| 11 | 3715200 | Junta cristal L=3400 | | 1 | 1 | 1 | 1 | | | | | | |
| 12 | Q212051 | Tuerca sombrerete M-8 | | 3 | 3 | 3 | 3 | | | | | | |
| 13 | Q242050 | Arandela abanico A-8 | | 3 | 3 | 3 | 3 | | | | | | |
| 14 | Q302025 | Arandela plana Ø8,4xØ20x1,5 | | 3 | 3 | 3 | 3 | | | | | | |
| 15 | Q012042 | Tornillo exagonal M-6x15 | | 1 | 1 | 1 | 1 | | | | | | |
| 16 | Q242040 | Arandela abanico A-6 | | 1 | 1 | 1 | 1 | | | | | | |
| 17 | R662807 | Arandela amarre puerta | | 1 | 1 | 1 | 1 | | | | | | |
| 18 | T130500 | Bisagra superior | | 1 | 1 | 1 | 1 | | | | | | |
| 19 | R660534 | Eje superior | | 1 | 1 | 1 | 1 | | | | | | |
| 20 | Z850519 | Resorte | | 1 | 1 | 1 | 1 | | | | | | |
| 21 | R670612 | Base de pestillo | | 2 | 2 | 2 | 2 | | | | | | |
| | Q302022 | Arandela plana Ø16xØ6x1,2 | | 2 | 2 | 2 | 2 | | | | | | |

| MOD. | HORNOS : HMM, HME, HMP-20/21 | ZONA | PUERTA | PLANO | C-1470 |
|---|---|---|---|---|---|

| ITEM | CODIGO | DENOMINACION | TEXTO | HMM-20/21 HMM-2-20/11 | HME-20/21 HME-2-20/11 | HMP-20/21 HMP-2-20/11 | HMM-20/21UL | | | | | | NOTAS |
|---|---|---|---|---|---|---|---|---|---|---|---|---|---|
| | Q242040 | Arandela abanico A-6 | | 2 | 2 | 2 | 2 | | | | | | |
| | Q162040 | Tuerca exagonal M-6 | | 2 | 2 | 2 | 2 | | | | | | |
| 22 | R660605 | Muelle tensor pestillo | | 2 | 2 | 2 | 2 | | | | | | |
| 23 | R670613 | Pestillo sujecion cristal interior | | 2 | 2 | 2 | 2 | | | | | | |
| 24 | R140600 | Panel puerta 20/21 | | 1 | 1 | 1 | 1 | | | | | | |
| | Q412002 | Remache tubular Ø4x7,5 | | 16 | 16 | 16 | 16 | | | | | | |
| 25 | R140604 | Cristal exterior 20/21 | | 1 | 1 | 1 | 1 | | | | | | |
| 26 | R660549 | Guia eje inferior | | 1 | 1 | 1 | 1 | | | | | | |
| 27 | Q062040 | Tornillo avellanado M-6x16 | | 4 | 4 | 4 | 4 | | | | | | |
| 28 | R660551 | Bisagra inferior | | 1 | 1 | 1 | 1 | | | | | | |
| 29 | Q242040 | Arandela abanico A-6 | | 2 | 2 | 2 | 2 | | | | | | |
| 30 | Q012041 | Tornillo exagonal M-6x10 | | 2 | 2 | 2 | 2 | | | | | | |
| 31 | T130502 | Manilla | | 1 | 1 | 1 | 1 | | | | | | |
| 32 | Q132042 | Varilla roscada M-6x15 | | 1 | 1 | 1 | 1 | | | | | | |
| 33 | T130507 | Piton enganche | | 2 | 2 | 2 | 2 | | | | | | |
| 34 | T130506 | Resorte | | 2 | 2 | 2 | 2 | | | | | | |
| 35 | T130515 | Guia manilla | | 1 | 1 | 1 | 1 | | | | | | |
| 36 | T130513 | Soporte iman | | 1 | 1 | 1 | 1 | | | | | | |
| 37 | Z200507 | Protector iman | | 1 | 1 | 1 | 1 | | | | | | |
| 38 | Z200506 | Iman | | 1 | 1 | 1 | 1 | | | | | | |
| 39 | Z100522 | Interruptor magnetico | | 1 | 1 | 1 | 1 | | | | | | |
| 40 | T130514 | Soporte resortes | | 1 | 1 | 1 | 1 | | | | | | |
| 41 | Q032032 | Tornillo alomado M-5x15 | | 2 | 2 | 2 | 2 | | | | | | |
| 42 | T130511 | Suplemento fijacion cerradura | | 1 | 1 | 1 | 1 | | | | | | |
| 43 | Z608410 | Casquillo | | 2 | 2 | 2 | 2 | | | | | | |
| 44 | Q352001 | Pasador de aletas Ø2x15 | | 4 | 4 | 4 | 4 | | | | | | |
| 45 | Q042043 | Tornillo avellanado M-6x20 | | 4 | 4 | 4 | 4 | | | | | | |
| 46 | R260545 | Enganche | | 2 | 2 | 2 | 2 | | | | | | |
| 47 | R660538 | Calzo de enganche | | 6 | 6 | 6 | 6 | | | | | | |

| MOD. | HORNOS : HMM, HME, HMP-20/21 | ZONA | PUERTA | PLANO | C-1470 |
|---|---|---|---|---|---|

| ITEM | CODIGO | DENOMINACION | TEXTO | HMM-20/21 HMM-2-20/11 | HME-20/21 HME-2-20/11 | HMP-20/21 HMP-2-20/11 | HMM-20/21UL | | | | | | NOTAS |
|---|---|---|---|---|---|---|---|---|---|---|---|---|---|
| 48 | Q221343 | Remache exagonal M-6 | | 4 | 4 | 4 | 4 | | | | | | |
| 49 | T080503 | Suplemento elemento cierre | | 6 | 6 | 6 | 6 | | | | | | |
| 50 | T080504 | Elemento de cierre | | 2 | 2 | 2 | 2 | | | | | | |
| 51 | Q262040 | Arandela muelle A-6 | | 8 | 8 | 8 | 8 | | | | | | |
| 52 | Q162040 | Tuerca exagonal M-6 | | 8 | 8 | 8 | 8 | | | | | | |
| 53 | R090514 | Tubo alargadera | | 2 | 2 | 2 | 2 | | | | | | |
| 54 | T130509 | Mecanismo de cierre | | 1 | 1 | 1 | 1 | | | | | | |
| 55 | Q262040 | Arandela muelle A-6 | | 2 | 2 | 2 | 2 | | | | | | |
| 56 | Q162040 | Tuerca exagonal M-6 | | 2 | 2 | 2 | 2 | | | | | | |
| 57 | T130508 | Eje de manilla | | 1 | 1 | 1 | 1 | | | | | | |
| 58 | T130505 | Casquillo | | 1 | 1 | 1 | 1 | | | | | | |
| 59 | Q271033 | Arandela de seguridad Ø6 | | 1 | 1 | 1 | 1 | | | | | | |
| 60 | Q032031 | Tornillo alomado M-5x10 | | 2 | 2 | 2 | 2 | | | | | | |
| 60 | Q032021 | Tornillo alomado M-4x10 | | 2 | 2 | 2 | 2 | | | | | | |
| 61 | T140502 | Tapa cierre puerta | | 1 | 1 | 1 | 1 | | | | | | |
| | | | | | | | | | | | | | |
| 62 | 1100002810 | KIT Cristal interior completo 20/21 | | 1 | 1 | 1 | 1 | | | | | | |
| | | | | | | | | | | | | | |
| 63 | R140507 | Fijacion junta completa 20/21 | | 1 | 1 | 1 | 1 | | | | | | |
| | Q033021 | Tornillo alomado M-4x10 ( laton ) | | 40 | 40 | 40 | 40 | | | | | | |
| | Q222041 | Remache exagonal M-4 inox. | | 40 | 40 | 40 | 40 | | | | | | |
| 64 | R140506 | Junta de puerta 20/21 | | 1 | 1 | 1 | 1 | | | | | | |
| | | | | | | | | | | | | | |
| | | | | | | | | | | | | | |
| | | | | | | | | | | | | | |
| | | | | | | | | | | | | | |
| | | | | | | | | | | | | | |
| | | | | | | | | | | | | | |
| | | | | | | | | | | | | | |

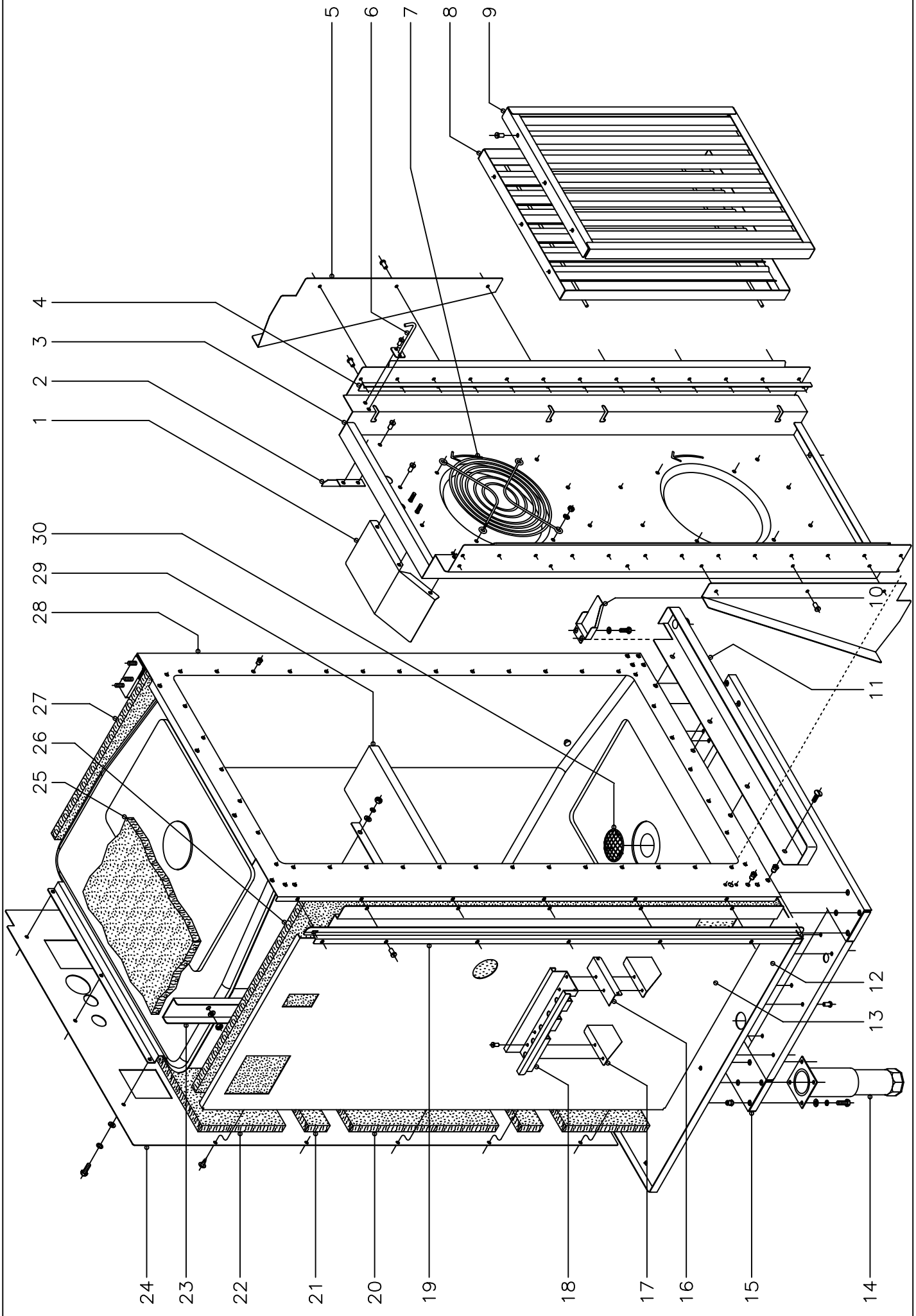


| N plano | Firma | Fecha | Aparato | Lamina | |
|---|---|---|---|---|---|
| C−1471 | | 11−2003 | MUEBLE INTERIOR<br>HORNOS HMM, HME, HMP−20/21 | 3 | Fagor Industrial S.Coop. FAGOR<br>Oñate |

| MOD. | HORNOS : HMM, HME, HMP-20/21 | ZONA | MUEBLE INTERIOR | PLANO | C-1471 |
|---|---|---|---|---|---|

| ITEM | CODIGO | DENOMINACION | TEXTO | HMM-20/21 HMM-2-20/11 | HME-20/21 HME-2-20/11 | HMP-20/21 HMP-2-20/11 | HMM-20/21UL | | | | | | NOTAS |
|---|---|---|---|---|---|---|---|---|---|---|---|---|---|
| 1 | R682632 | Deflector turbina | | 4 | 4 | 4 | 4 | | | | | | |
| | Q412002 | Remache tubular Ø 4x7,5 | | 12 | 12 | 12 | 12 | | | | | | |
| 2 | R292647 | Escuadra sujecion cubreventilador | | 2 | 2 | 2 | 2 | | | | | | |
| | Q412002 | Remache tubular Ø 4x7,5 | | 4 | 4 | 4 | 4 | | | | | | |
| 3 | R142603 | Cubre ventilador | | 1 | 1 | 1 | 1 | | | | | | |
| 4 | R092616 | Tope cubreventilador | | 2 | 2 | 2 | 2 | | | | | | |
| | Q412002 | Remache tubular Ø 4x7,5 | | 26 | 26 | 26 | 26 | | | | | | |
| 5 | R732619 | Aleron lateral | | 4 | 4 | 4 | 4 | | | | | | |
| | Q412002 | Remache tubular Ø 4x7,5 | | 12 | 12 | 12 | 12 | | | | | | |
| 6 | R142615 | Fijacion portabandejas | | 2 | 2 | 2 | 2 | | | | | | |
| | Q412002 | Remache tubular Ø 4x7,5 | | 4 | 4 | 4 | 4 | | | | | | |
| 7 | R662661 | Proteccion de turbina | | - | - | - | 1 | | | | | | |
| | Q032021 | Tornillo alomado M-4x10 | | - | - | - | 4 | | | | | | |
| | Q242020 | Arandela abanico A-4 | | - | - | - | 4 | | | | | | |
| | Q162020 | Tuerca exagonal M-4 | | - | - | - | 4 | | | | | | |
| 8 | R092621 | Posterior de filtro | | 2 | 2 | 2 | 2 | | | | | | |
| 9 | R092618 | Anterior de filtro | | 2 | 2 | 2 | 2 | | | | | | |
| | Q412002 | Remache tubular Ø 4x7,5 | | 12 | 12 | 12 | 12 | | | | | | |
| 10 | R662800 | Cubrecables | | 1 | 1 | 1 | 1 | | | | | | |
| | Q221342 | Remache exagonal M-5 | | 2 | 2 | 2 | 2 | | | | | | |
| | Q232030 | Arandela plana A-5 | | 2 | 2 | 2 | 2 | | | | | | |
| | Q012031 | Tornillo exagonal M-5x10 | | 2 | 2 | 2 | 2 | | | | | | |
| 11 | T142820 | Recogeaguas | | 1 | 1 | 1 | 1 | | | | | | |
| | Q221343 | Remache exagonal M-6 | | 4 | 4 | 4 | 4 | | | | | | |
| | Q152017 | Tornillo amarre M-6x13 | | 4 | 4 | 4 | 4 | | | | | | |
| 12 | R142830 | Base exterior de horno | | 1 | 1 | 1 | 1 | | | | | | |
| 13 | T152604 | Soporte lateral aislante | | 1 | 1 | 1 | 1 | | | | | | |
| 14 | R092830 | Pata regulable | | 4 | 4 | 4 | 4 | | | | | | |
| | Q012043 | Tornillo exagonal M-6x20 | | 16 | 16 | 16 | 16 | | | | | | |

| MOD. | HORNOS : HMM, HME, HMP-20/21 | ZONA | MUEBLE INTERIOR | PLANO | C-1471 |
|---|---|---|---|---|---|

| ITEM | CODIGO | DENOMINACION | TEXTO | HMM-20/21 HMM-2-20/11 | HME-20/21 HME-2-20/11 | HMP-20/21 HMP-2-20/11 | HMM-20/21UL | | | | | | NOTAS |
|---|---|---|---|---|---|---|---|---|---|---|---|---|---|
| | Q262040 | Arandela muelle A-6 | | 16 | 16 | 16 | 16 | | | | | | |
| | Q232040 | Arandela plana A-6 | | 16 | 16 | 16 | 16 | | | | | | |
| | Q221343 | Remache exagonal M-6 | | 16 | 16 | 16 | 16 | | | | | | |
| 15 | T152801 | Refuerzo de apoyos | | 1 | 1 | 1 | 1 | | | | | | |
| | Q412002 | Remache tubular Ø 4x7,5 | | 24 | 24 | 24 | 24 | | | | | | |
| 16 | R092611 | Fijacion a panel lateral | | 1 | 1 | 1 | 1 | | | | | | |
| 17 | R092610 | Refuerzo base de cuadro | | 2 | 2 | 2 | 2 | | | | | | |
| 18 | R342821 | Guia cuadro electrico | | 1 | 1 | 1 | 1 | | | | | | |
| | Q411304 | Remache avibulb Ø 4,8 | | 10 | 10 | 10 | 10 | | | | | | |
| 19 | R092662 | Protector de portamandos | | 1 | 1 | 1 | 1 | | | | | | |
| | Q412002 | Remache tubular Ø 4x7,5 | | 6 | 6 | 6 | 6 | | | | | | |
| 20 | U675605 | Aislante central 740x380x20 | | 1 | 1 | 1 | 1 | | | | | | |
| 21 | R662616 | Aislante entre refuerzos 560x60x20 | | 8 | 8 | 8 | 8 | | | | | | |
| 22 | R032625 | Aislante supe. e inferi. 760x230x20 | | 2 | 2 | 2 | 2 | | | | | | |
| 23 | R142613 | Refuerzo vertical | | 2 | 2 | 2 | 2 | | | | | | |
| | Q232040 | Arandela plana A-6 | | 12 | 12 | 12 | 12 | | | | | | |
| | Q162040 | Tuerca exagonal M-6 | | 12 | 12 | 12 | 12 | | | | | | |
| 24 | R142601 | Soporte aislante posterior | | 1 | 1 | 1 | 1 | | | | | | |
| | Q151301 | Tornillo alomado | | 5 | 5 | 5 | 5 | | | | | | |
| | Q012042 | Tornillo exagonal M-6x15 | | 15 | 15 | 15 | 15 | | | | | | |
| | Q262040 | Arandela muelle A-6 | | 15 | 15 | 15 | 15 | | | | | | |
| | Q232040 | Arandela plana A-6 | | 15 | 15 | 15 | 15 | | | | | | |
| 25 | R682623 | Aislante base y techo 860x790x20 | | 5 | 5 | 5 | 5 | | | | | | |
| 26 | R142608 | Aislante lateral 1370x860x20 | | 3 | 3 | 3 | 3 | | | | | | |
| 27 | R142608 | Aislante lateral 1370x860x20 | | 2 | 2 | 2 | 2 | | | | | | |
| 28 | R142625 | Cuerpo interior horno | | 1 | 1 | 1 | 1 | | | | | | |
| 29 | R142609 | Separador central | | 1 | 1 | 1 | 1 | | | | | | |
| | Q232040 | Arandela plana A-6 | | 2 | 2 | 2 | 2 | | | | | | |
| | Q262040 | Arandela muelle A-6 | | 2 | 2 | 2 | 2 | | | | | | |

| MOD. | HORNOS : HMM, HME, HMP-20/21 | ZONA | MUEBLE INTERIOR | PLANO | C-1471 |
|---|---|---|---|---|---|

| ITEM | CODIGO | DENOMINACION | TEXTO | HMM-20/21 HMM-2-20/11 | HME-20/21 HME-2-20/11 | HMP-20/21 HMP-2-20/11 | HMM-20/21UL | | | | | | NOTAS |
|---|---|---|---|---|---|---|---|---|---|---|---|---|---|
| | Q162040 | Tuerca exagonal M-6 | | 2 | 2 | 2 | 2 | | | | | | |
| 30 | R145033 | Filtro desague | | 1 | 1 | 1 | 1 | | | | | | |

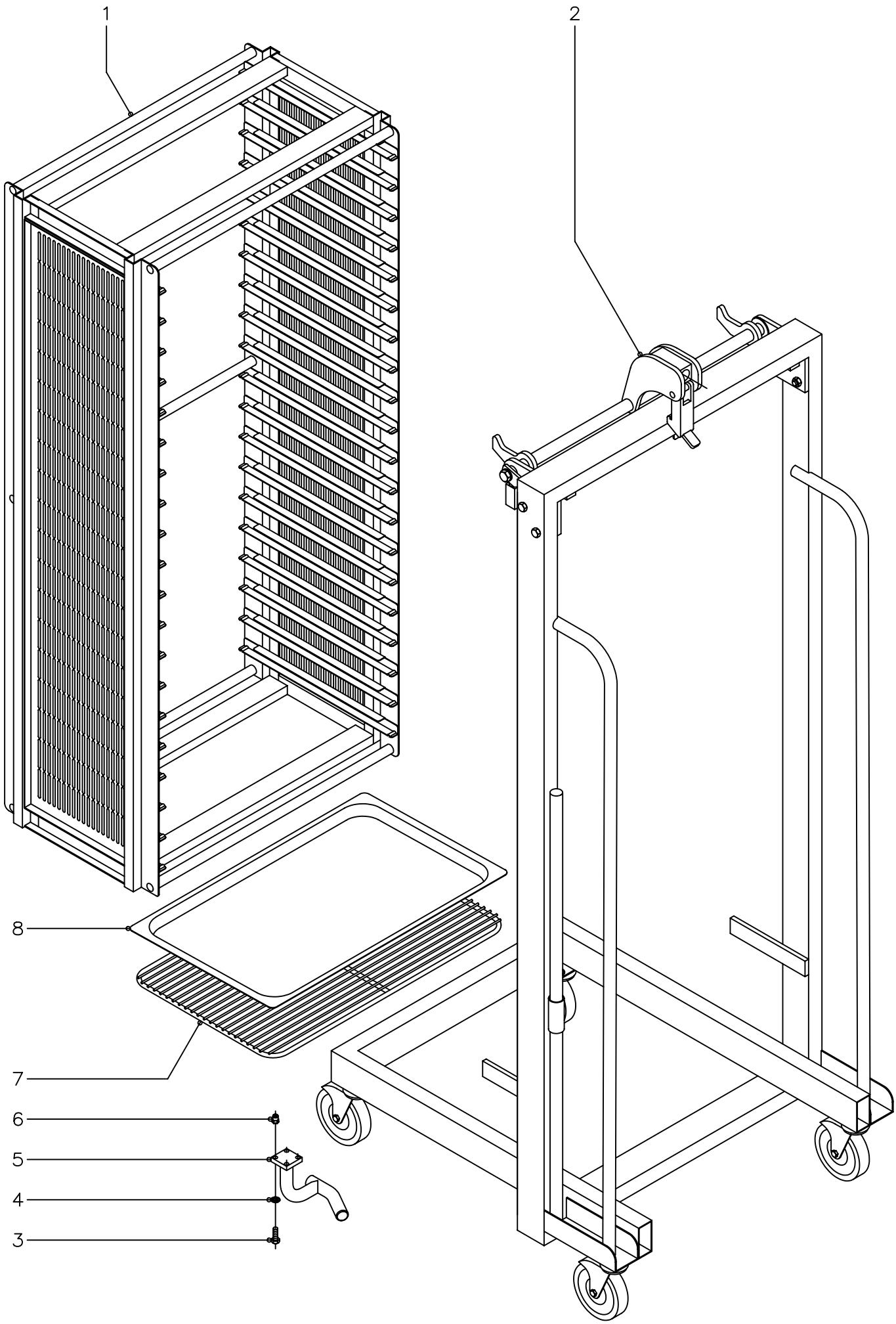


| N plano | Firma | Fecha | Aparato | Lamina | |
|---|---|---|---|---|---|
| C−1472 | | 11−2003 | CARRO Y EXTRUCTURA PORTABANDEJAS<br>HORNOS HMM, HME, HMP−20/21 | 4 | Fagor Industrial S.Coop. FAGOR<br>Oñate |

| MOD. | HORNOS : HMM, HME, HMP-20/21 | ZONA | CARRO Y EXTRUCTURA PORTABANDEJAS | PLANO | C-1472 |
|---|---|---|---|---|---|

| ITEM | CODIGO | DENOMINACION | TEXTO | HMM-20/21 | HMM-2-20/11 | HME-20/21 | HMP-20/21 | HME-2-20/11 | HMP-2-20/11 | HMM-20/21UL | | | | | NOTAS |
|---|---|---|---|---|---|---|---|---|---|---|---|---|---|---|---|
| 1 | R145640 | Portabandejas 20/21 | | 1 | - | 1 | | - | | - | | | | | |
| 1 | R145663 | Portabandejas 20/21 UL | | - | - | - | | - | | 1 | | | | | |
| s/n | R145650 | Portabandejas 2-20/11 | | - | 1 | - | | 1 | | - | | | | | |
| 2 | R145630 | Carro portabandejas 20/21 | | 1 | 1 | 1 | | 1 | | 1 | | | | | |
| 3 | Q012033 | Tornillo exagonal M-5x20 | | 8 | 8 | 8 | | 8 | | 8 | | | | | |
| 4 | Q242030 | Arandela abanico A-5 | | 8 | 8 | 8 | | 8 | | 8 | | | | | |
| 5 | T132815 | Suplemento guia izquierda de carro | | 1 | 1 | 1 | | 1 | | 1 | | | | | |
| s/n | T132814 | Suplemento guia derecha de carro | | 1 | 1 | 1 | | 1 | | 1 | | | | | |
| 6 | Q221342 | Remache exagonal M-5 | | 8 | 8 | 8 | | 8 | | 8 | | | | | |
| 7 | R682676 | Parrilla de horno 2/1 | | 1 | - | 1 | | - | | 10 | | | | | |
| s/n | R672665 | Parrilla de horno 1/1 | | - | 1 | - | | 1 | | - | | | | | |
| 8 | R032605 | Bandeja de horno 2/1 P=40 | | 1 | - | 1 | | - | | - | | | | | |
| s/n | R252816 | Bandeja de horno 1/1 P=20 | | - | 1 | - | | 1 | | - | | | | | |

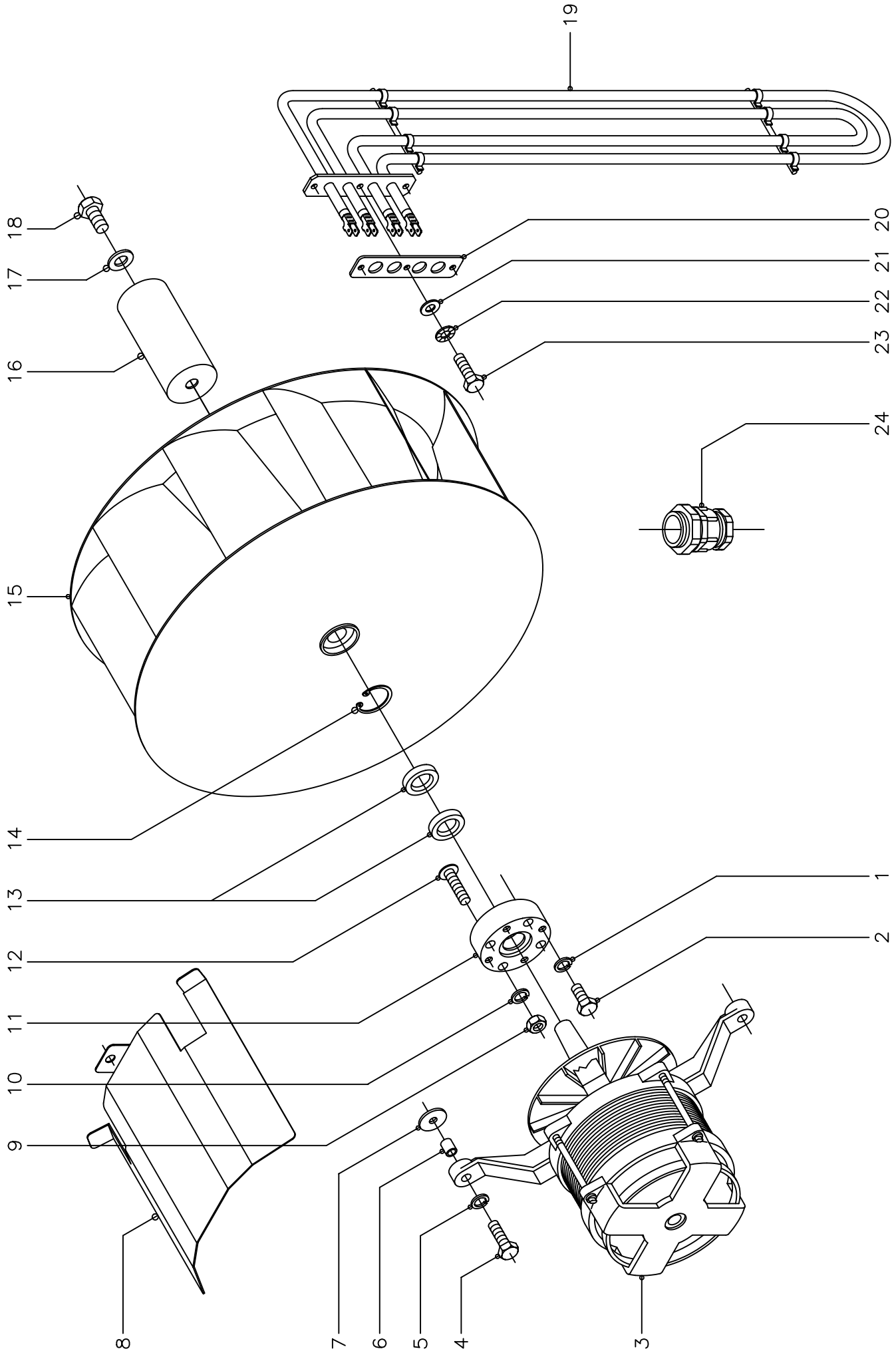


| N plano | Firma | Fecha | Aparato | Lamina | |
|---|---|---|---|---|---|
| C–1473 | | 11–2003 | TURBINA<br>HORNOS HMM, HME, HMP–20/21 | 5 | Fagor Industrial S.Coop.<br>Onate |

| MOD. | HORNOS : HMM, HME, HMP-20/21 | ZONA | TURBINA | PLANO | C-1473 |
|---|---|---|---|---|---|

| ITEM | CODIGO | DENOMINACION | TEXTO | HMM-20/21 HMM-2-20/11 | HME-20/21 HME-2-20/11 | HMP-20/21 HMP-2-20/11 | HMM-20/21UL | | | | | | NOTAS |
|---|---|---|---|---|---|---|---|---|---|---|---|---|---|
| 1 | Q232030 | Arandela muelle A-5 | | 8 | 8 | 8 | 8 | | | | | | |
| 2 | Q012031 | Tornillo exagonal M-5x10 | | 8 | 8 | 8 | 8 | | | | | | |
| 3 | R253049 | Motor (220/240,380/415 V.,50/60 Hz. | | 2 | - | - | 2 | | | | | | Trifasico |
| 3 | R663033 | Motor ( 380/400 V., 50/60 Hz.) | | - | 2 | 2 | - | | | | | | Trifasico |
| 3 | R663034 | Motor ( 220/230 V., 50/60 Hz.) | | - | 2 | 2 | - | | | | | | Trifasico |
| 4 | Q012044 | Tornillo exagonal M-6x25 | | 8 | 8 | 8 | 8 | | | | | | |
| 5 | Q262040 | Arandela muelle A-6 | | 8 | 8 | 8 | 8 | | | | | | |
| 6 | R663057 | Casquillo amarre motor | | - | 8 | 8 | - | | | | | | |
| 7 | Q301304 | Arandela calzo Ø 23xØ 6,5x2 | | 8 | 8 | 8 | 8 | | | | | | |
| 8 | R142628 | Tejadillo motor | | 2 | 2 | 2 | 2 | | | | | | |
| | Q012042 | Tornillo exagonal M-6x15 | | 2 | 2 | 2 | 2 | | | | | | |
| 9 | Q162040 | Tuerca exagonal M-6 | | 8 | 8 | 8 | 8 | | | | | | |
| 10 | Q262040 | Arandela muelle A-6 | | 8 | 8 | 8 | 8 | | | | | | |
| 11 | R662623 | Casquillo reten | | 2 | 2 | 2 | 2 | | | | | | |
| 12 | - | Perno M-6 ( Caldeado a cuerpo ) | | 8 | 8 | 8 | 8 | | | | | | |
| 13 | R662627 | Reten Ø 28xØ 17x7 | | 4 | 4 | 4 | 4 | | | | | | |
| 14 | Q302023 | Anillo de seguridad Ø 28x1,2 | | 2 | 2 | 2 | 2 | | | | | | |
| 15 | R253042 | Turbina | | 2 | 2 | 2 | 2 | | | | | | |
| 16 | R665025 | Distribuidor inyeccion | | - | 1 | 1 | - | | | | | | |
| 17 | R763010 | Arandela seguridad Hanning | | 2 | 2 | 2 | 2 | | | | | | |
| 18 | Q012063 | Tornillo exagonal M-10x20 | | 2 | 2 | 2 | 2 | | | | | | |
| 19 | R683000 | Resistencia 2000+2000W., 230V. | | 12 | 12 | 12 | 12 | | | | | | |
| 20 | R673063 | Junta resistencia | | 12 | 12 | 12 | 12 | | | | | | |
| 21 | Q232030 | Arandela plana A-5 | | 36 | 36 | 36 | 36 | | | | | | |
| 22 | Q242030 | Arandela abanico A-5 | | 36 | 36 | 36 | 36 | | | | | | |
| 23 | Q012031 | Tornillo exagonal M-5x10 | | 36 | 36 | 36 | 36 | | | | | | |
| 24 | R143010 | Prensaestopas | | 1 | 1 | 1 | 1 | | | | | | |
| | | | | | | | | | | | | | |
| | | | | | | | | | | | | | |

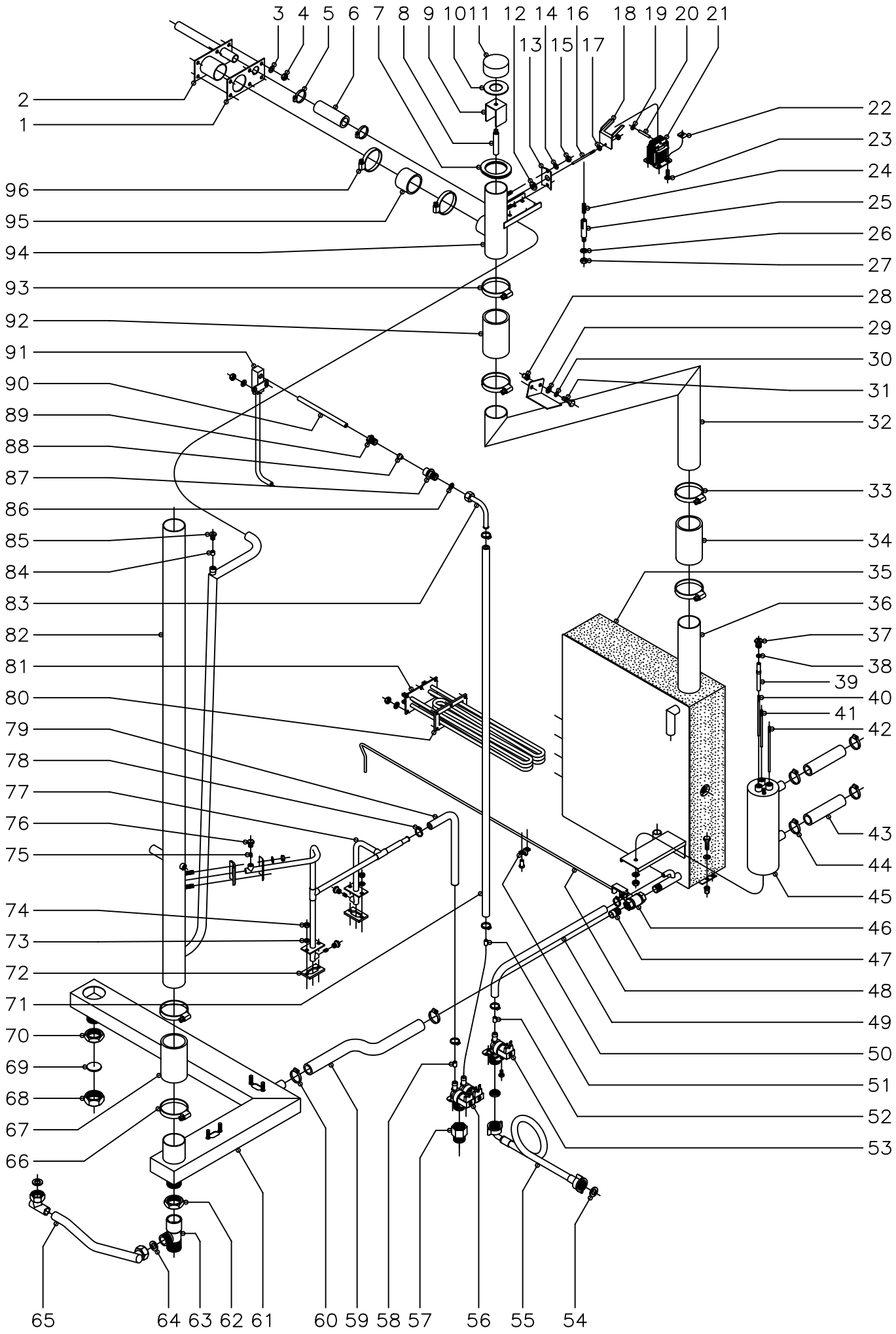


| N plano | Firma | Fecha | Aparato | Lamina | |
|---|---|---|---|---|---|
| C−1474 | | 11−2003 | CIRCUITO DE AGUA<br>HORNOS HMM, HME, HMP−20/21 | 6 | Fagor Industrial S.Coop.<br>Oñate FAGOR |

| MOD. | HORNOS : HMM, HME, HMP-20/21 | ZONA | CIRCUITO DE AGUA | PLANO | C-1474 |
|---|---|---|---|---|---|

| ITEM | CODIGO | DENOMINACION | TEXTO | HMM-20/21 HMM-2-20/11 | HME-20/21 HME-2-20/11 | HMP-20/21 HMP-2-20/11 | HMM-20/21UL | | | | | | NOTAS |
|---|---|---|---|---|---|---|---|---|---|---|---|---|---|
| 1 | R675038 | Junta entrada y retorno | | 1 | 1 | 1 | 1 | | | | | | |
| 2 | R022613 | Tubo entrada y retorno vapor | | 1 | 1 | 1 | 1 | | | | | | |
| 3 | Q232040 | Arandela plana A-6 | | 6 | 6 | 6 | 6 | | | | | | |
| 4 | Q162040 | Tuerca exagonal M-6 | | 6 | 6 | 6 | 6 | | | | | | |
| 5 | Q881304 | Abrazadera 20 - 32 | | 2 | 2 | 2 | 2 | | | | | | |
| 6 | 3715600 | Tubo silicona forra. Ø26xØ18x100 | | 1 | 1 | 1 | 1 | | | | | | |
| 7 | R662813 | Pasamuros chimenea | | 1 | 1 | 1 | 1 | | | | | | |
| 8 | R675008 | Union retencion de vapores | | 1 | 1 | 1 | 1 | | | | | | |
| 9 | R675005 | Guia retencion de vapores | | 1 | 1 | 1 | 1 | | | | | | |
| 10 | R675007 | Junta retencion de vapores | | 1 | 1 | 1 | 1 | | | | | | |
| 11 | R675006 | Retencion de vapores | | 1 | 1 | 1 | 1 | | | | | | |
| 12 | R675033 | Junta palanca accionamiento | | 1 | 1 | 1 | 1 | | | | | | |
| 13 | T115105 | Amarre junta a conduccion vahos | | 1 | 1 | 1 | 1 | | | | | | |
| 14 | Q242030 | Arandela abanico A-5 | | 2 | 2 | 2 | 2 | | | | | | |
| 15 | Q162030 | Tuerca exagonal M-5 | | 2 | 2 | 2 | 2 | | | | | | |
| 16 | R675014 | Palanca accionamiento | | 1 | 1 | 1 | 1 | | | | | | |
| 17 | Q162020 | Tuerca exagonal M-4 | | 2 | 2 | 2 | 2 | | | | | | |
| 18 | R672640 | Escuadra accionamiento | | 1 | 1 | 1 | 1 | | | | | | |
| 19 | Q301035 | Sujecion rapida Ø4 | | 2 | 2 | 2 | 2 | | | | | | |
| 20 | R675016 | Pasador electroiman | | 1 | 1 | 1 | 1 | | | | | | |
| 21 | R663030 | Electroiman | | 1 | 1 | 1 | 1 | | | | | | |
| 22 | Q221012 | Tuerca rapida M-5 | | 2 | 2 | 2 | 2 | | | | | | |
| 23 | Q152004 | Tornillo aplastado M-5x13 | | 2 | 2 | 2 | 2 | | | | | | |
| 24 | Z883001 | Resorte | | 1 | 1 | 1 | 1 | | | | | | |
| 25 | R665027 | Guia resorte | | 1 | 1 | 1 | 1 | | | | | | |
| 26 | Q242040 | Arandela abanico A-6 | | 1 | 1 | 1 | 1 | | | | | | |
| 27 | Q162040 | Tuerca exagonal M-6 | | 1 | 1 | 1 | 1 | | | | | | |
| 28 | Q221343 | Remache exagonal M-6 | | 2 | 2 | 2 | 2 | | | | | | |
| 29 | Q232040 | Arandela plana A-6 | | 2 | 2 | 2 | 2 | | | | | | |

| MOD. | HORNOS : HMM, HME, HMP-20/21 | ZONA | CIRCUITO DE AGUA | PLANO | C-1474 |
|---|---|---|---|---|---|

| ITEM | CODIGO | DENOMINACION | TEXTO | HMM-20/21 HMM-2-20/11 | HME-20/21 HME-2-20/11 | HMP-20/21 HMP-2-20/11 | HMM-20/21UL | | | | | | NOTAS |
|---|---|---|---|---|---|---|---|---|---|---|---|---|---|
| 30 | Q262040 | Arandela muelle A-6 | | 2 | 2 | 2 | 2 | | | | | | |
| 31 | Q012042 | Tornillo exagonal M-6x15 | | 2 | 2 | 2 | 2 | | | | | | |
| 32 | R145007 | Conduccion de vapor | | 1 | 1 | 1 | 1 | | | | | | |
| 33 | Q881324 | Abrazadera 50 - 70 | | 2 | 2 | 2 | 2 | | | | | | |
| 34 | R345020 | Tubo empalme Ø63xØ53x100 | | 1 | 1 | 1 | 1 | | | | | | |
| 35 | R145015 | Aislante de generador | | 1 | 1 | 1 | 1 | | | | | | |
| 36 | R145001 | Generador de vapor | | 1 | 1 | 1 | 1 | | | | | | |
| 37 | R345058 | Racord amarre electrodos | | 3 | 3 | 3 | 3 | | | | | | |
| 38 | Q163020 | Tuerca exagonal M-4 | | 6 | 6 | 6 | 6 | | | | | | |
| 39 | R345059 | Guia aislante de electrodos | | 3 | 3 | 3 | 3 | | | | | | |
| 40 | R345063 | Electrodo nivel bajo L=116 | | 1 | 1 | 1 | 1 | | | | | | |
| 41 | R345060 | Electrodo nivel alto L=106 | | 1 | 1 | 1 | 1 | | | | | | |
| 42 | R345064 | Electrodo de masa L=131 | | 1 | 1 | 1 | 1 | | | | | | |
| 43 | 3715600 | Tubo silicona forra. Ø26xØ18x350 | | 2 | 2 | 2 | 2 | | | | | | |
| 44 | Q881304 | Abrazadera 20 - 32 | | 4 | 4 | 4 | 4 | | | | | | |
| 45 | R025011 | Cuerpo de niveles | | 1 | 1 | 1 | 1 | | | | | | |
| 46 | R015034 | Cuerpo grifo vaciado | | 1 | 1 | 1 | 1 | | | | | | |
| 47 | R345014 | Manguito grifo vaciado | | 1 | 1 | 1 | 1 | | | | | | |
| 48 | R032804 | Palanca de grifo de vaciado | | 1 | 1 | 1 | 1 | | | | | | |
| 49 | 3676900 | Tubo de goma Ø17xØ10x300 | | 1 | 1 | 1 | 1 | | | | | | |
| 50 | Q901306 | Grapa amarre palanca grifo | | 1 | 1 | 1 | 1 | | | | | | |
| | Q412002 | Remache tubular Ø4x7,5 | | 2 | 2 | 2 | 2 | | | | | | |
| 51 | R665041 | Regulador caudal (0,25 l./m.) verde | | - | 1 | 1 | - | | | | | | |
| 52 | Z601156 | Regulador caudal (8 l./m.) rojo | | 1 | 1 | 1 | 1 | | | | | | |
| 53 | Z701135 | Electrovalvula simple | | 1 | 1 | 1 | 1 | | | | | | |
| | Q032021 | Tornillo alomado M-4x10 | | 2 | 2 | 2 | 2 | | | | | | |
| 54 | Q307031 | Arandela junta Ø24xØ14x3 | | 2 | 2 | 2 | - | | | | | | |
| 55 | Z601114 | Manguera entrada de agua | | 2 | 2 | 2 | - | | | | | | |
| | | | | | | | | | | | | | |

| MOD. | HORNOS : HMM, HME, HMP-20/21 | ZONA | CIRCUITO DE AGUA | PLANO | C-1474 |
|---|---|---|---|---|---|

| ITEM | CODIGO | DENOMINACION | TEXTO | HMM-20/21 HMM-2-20/11 | HME-20/21 HME-2-20/11 | HMP-20/21 HMP-2-20/11 | HMM-20/21UL | | | | | | NOTAS |
|---|---|---|---|---|---|---|---|---|---|---|---|---|---|
| 56 | P255001 | Electrovalvula doble | | - | 1 | 1 | - | | | | | | |
| 56 | Z701135 | Electrovalvula simple | | 1 | - | - | 1 | | | | | | |
| | Q032021 | Tornillo alomado M-4x10 | | 4 | 4 | 4 | 4 | | | | | | |
| 57 | T125033 | Adaptador a rosca UL | | - | - | - | 1 | | | | | | |
| 58 | Z601156 | Regulador caudal (8 l./m.) rojo | | 1 | 1 | 1 | 1 | | | | | | |
| 59 | 3715600 | Tubo silicona forra. Ø26xØ18x350 | | 1 | 1 | 1 | 1 | | | | | | |
| 60 | Q881304 | Abrazadera 20 - 32 | | 2 | 2 | 2 | 2 | | | | | | |
| 61 | - | Tubo desague (soldado a cuerpo) | | 1 | 1 | 1 | 1 | | | | | | |
| 62 | Q223014 | Contratuerca 1" | | 1 | 1 | 1 | 1 | | | | | | |
| 63 | R145036 | Manguito desague | | 1 | 1 | 1 | 1 | | | | | | |
| 64 | Q307031 | Arandela junta Ø24xØ14x3 | | 2 | 2 | 2 | 2 | | | | | | |
| 65 | R145034 | Conduccion recogeaguas | | 1 | 1 | 1 | 1 | | | | | | |
| 66 | Q881324 | Abrazadera 50 - 70 | | 2 | 2 | 2 | 2 | | | | | | |
| 67 | R345020 | Tubo empalme Ø63xØ53x100 | | 1 | 1 | 1 | 1 | | | | | | |
| 68 | R665053 | Tuerca tapon 1" | | 1 | 1 | 1 | 1 | | | | | | |
| 69 | R015011 | Arandela junta tapon Ø34x3 | | 1 | 1 | 1 | 1 | | | | | | |
| 70 | Q223014 | Contratuerca 1" | | 1 | 1 | 1 | 1 | | | | | | |
| 71 | 3676900 | Tubo de goma Ø17xØ10x1300 | | 1 | 1 | 1 | 1 | | | | | | |
| 72 | R345108 | Junta de vahos | | 3 | 3 | 3 | 3 | | | | | | |
| 73 | Q242030 | Arandela abanico A-5 | | 6 | 6 | 6 | 6 | | | | | | |
| 74 | Q162030 | Tuerca exagonal M-5 | | 6 | 6 | 6 | 6 | | | | | | |
| 75 | Z651932 | Rodete | | 3 | 3 | 3 | 3 | | | | | | |
| 76 | Z651931 | Tobera | | 3 | 3 | 3 | 3 | | | | | | |
| 77 | R145024 | Conduccion condensacion | | 1 | 1 | 1 | 1 | | | | | | |
| 78 | Q881302 | Abrazadera 12 - 20 | | 6 | 6 | 6 | 6 | | | | | | |
| 79 | 3676900 | Tubo de goma Ø17xØ10x300 | | 1 | 1 | 1 | 1 | | | | | | |
| 80 | R145012 | Junta cierre resistencias | | 4 | 4 | 4 | 4 | | | | | | |
| 81 | R143000 | Resistencia (3000W.x3, 230 V.) | | 4 | 4 | 4 | 4 | | | | | | |
| | Q232030 | Arandela plana A-5 | | 12 | 12 | 12 | 12 | | | | | | |

| MOD. | HORNOS : HMM, HME, HMP-20/21 | ZONA | CIRCUITO DE AGUA | PLANO | C-1474 |
|---|---|---|---|---|---|

| ITEM | CODIGO | DENOMINACION | TEXTO | HMM-20/21 HMM-2-20/11 | HME-20/21 HME-2-20/11 | HMP-20/21 HMP-2-20/11 | HMM-20/21UL | | | | | | NOTAS |
|---|---|---|---|---|---|---|---|---|---|---|---|---|---|
| | Q242030 | Arandela abanico A-5 | | 12 | 12 | 12 | 12 | | | | | | |
| | Q162030 | Tuerca exagonal M-5 | | 12 | 12 | 12 | 12 | | | | | | |
| 82 | R145000 | Retorno chimenea | | 1 | 1 | 1 | 1 | | | | | | |
| 83 | R695017 | Tubo conduccion agua | | - | 1 | 1 | - | | | | | | |
| 84 | 3712400 | Tubo-junta de silicona Ø8xØ3x20 | | 1 | 1 | 1 | 1 | | | | | | |
| 85 | R662629 | Racord cierre sonda | | 1 | 1 | 1 | 1 | | | | | | |
| 86 | Q306025 | Arandela junta Ø14xØ8,5x1,5 | | - | 1 | 1 | - | | | | | | |
| 87 | - | Soldado a cuerpo de horno | | - | 1 | 1 | - | | | | | | |
| 88 | R695004 | Bicono | | - | 1 | 1 | - | | | | | | |
| 89 | R695003 | Manguito cierre | | - | 1 | 1 | - | | | | | | |
| 90 | R665024 | Tubo conduccion a inyector | | - | 1 | 1 | - | | | | | | |
| 91 | R675017 | Tubo inyector | | - | 1 | 1 | - | | | | | | |
| | Q232030 | Arandela plana A-5 | | - | 2 | 2 | - | - | | | | | |
| | Q162030 | Tuerca exagonal M-5 | | - | 2 | 2 | - | - | | | | | |
| 92 | R345020 | Tubo empalme Ø63xØ53x100 | | 1 | 1 | 1 | 1 | | | | | | |
| 93 | Q881324 | Abrazadera 50 - 70 | | 2 | 2 | 2 | 2 | | | | | | |
| 94 | R675019 | Conjunto chimenea | | 1 | 1 | 1 | 1 | | | | | | |
| 95 | 3710900 | Tubo silicona Ø51xØ43x40 | | 1 | 1 | 1 | 1 | | | | | | |
| 96 | Q881307 | Abrazadera 40 - 60 | | 2 | 2 | 2 | 2 | | | | | | |
| | | | | | | | | | | | | | |
| | | | | | | | | | | | | | |
| | | | | | | | | | | | | | |
| | | | | | | | | | | | | | |
| | | | | | | | | | | | | | |
| | | | | | | | | | | | | | |
| | | | | | | | | | | | | | |
| | | | | | | | | | | | | | |
| | | | | | | | | | | | | | |
| | | | | | | | | | | | | | |

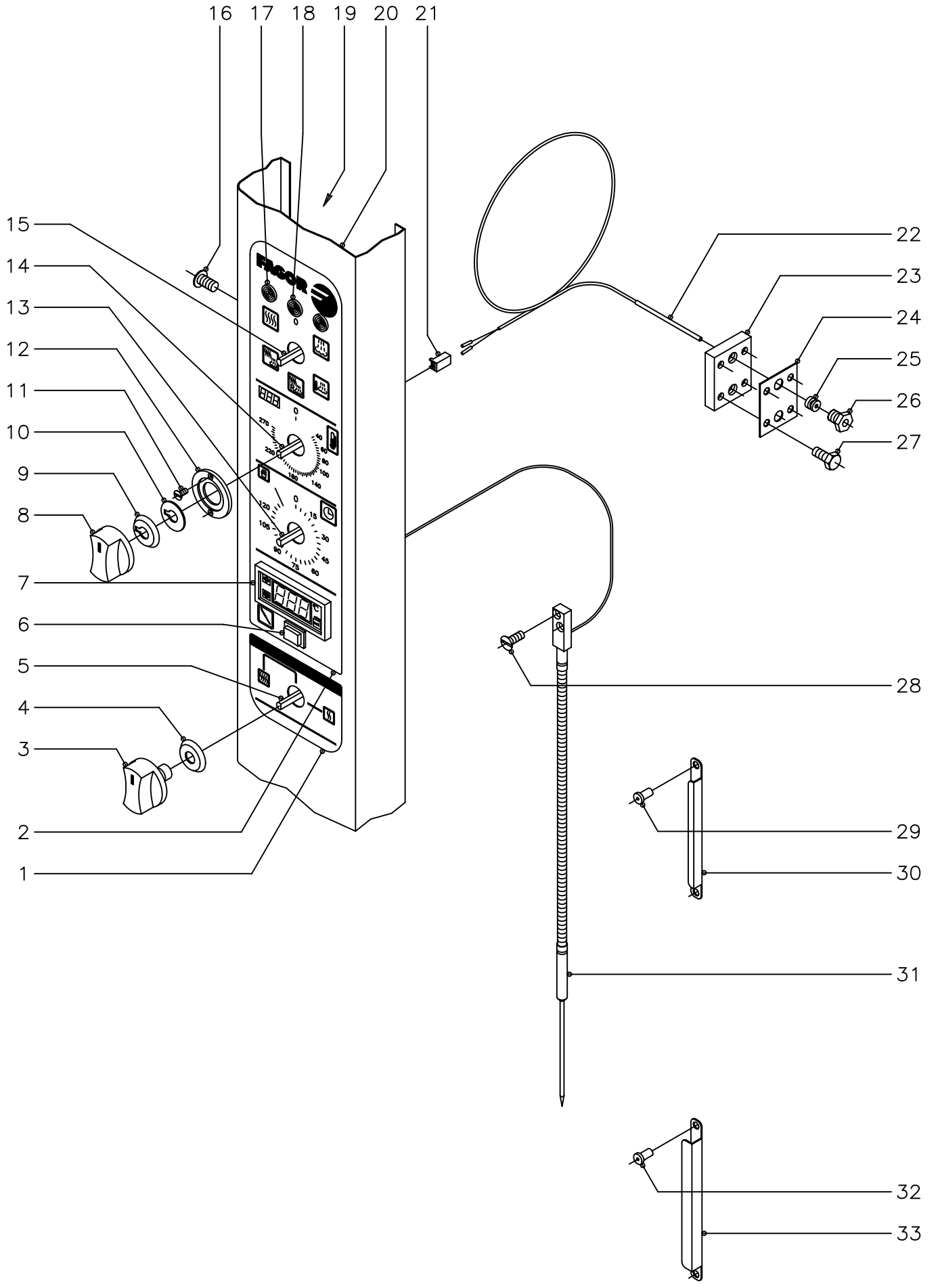


| N plano | Firma | Fecha | Aparato | Lamina | |
|---|---|---|---|---|---|
| C−1475 | | 11−2003 | SISTEMA ELECTRICO PORTAMANDOS<br>HORNOS HMM−20/21 | 7 | Fagor Industrial S.Coop.<br>OÑate |

| MOD. | HORNOS : HMM-20/21 | ZONA | SISTEMA ELECTRICO PORTAMANDOS | PLANO | C-1475 |
|---|---|---|---|---|---|

| ITEM | CODIGO | DENOMINACION | TEXTO | HMM-20/21 HMM-2-20/11 | HMM-20/21UL | | | | | | | | NOTAS |
|---|---|---|---|---|---|---|---|---|---|---|---|---|---|
| 1 | R693000 | Serigrafia inferior ( conmutador ) | | 1 | 1 | | | | | | | | |
| 2 | R743012 | Serigrafia superior ( controlador ) | | 1 | - | | | | | | | | |
| 2 | R743070 | Serigrafia superior ( controlador ) | | - | 1 | | | | | | | | |
| 3 | R663062 | Boton de mando (conmutadores) | | 3 | 3 | | | | | | | | |
| 4 | R663046 | Junta (conmutadores) | | 3 | 3 | | | | | | | | |
| 5 | R753000 | Conmutador de potencia | | 1 | 1 | | | | | | | | |
| 6 | R743008 | Interruptor regulacion sonda | | 1 | 1 | | | | | | | | |
| 7 | R743091 | Termostato digital º C. | | 1 | - | | | | | | | | |
| 7 | R743035 | Termostato digital º F. | | - | 1 | | | | | | | | |
| 8 | R663063 | Boton de mando (circuito impreso) | | 1 | 1 | | | | | | | | |
| 9 | R663045 | Junta (circuito impreso) | | 1 | 1 | | | | | | | | |
| 10 | R662810 | Arandela guia | | 1 | 1 | | | | | | | | |
| 11 | Q151346 | Tornillo avellanado M-3x5 | | 2 | 2 | | | | | | | | |
| 12 | R662809 | Guia boton de mando | | 1 | 1 | | | | | | | | |
| 13 | R723000 | Temporizador manual | | 1 | 1 | | | | | | | | |
| 14 | R743013 | Termostato electronico 270ºC. | | 1 | - | | | | | | | | |
| 14 | R693058 | Termostato electronico 500ºF. | | - | 1 | | | | | | | | |
| 15 | R743002 | Conmutador de funciones | | 1 | 1 | | | | | | | | |
| 16 | Q152004 | Tornillo aplastado M-5x13 | | 3 | 3 | | | | | | | | |
| 17 | R693056 | Piloto ambar | | 2 | 2 | | | | | | | | |
| 18 | R693055 | Piloto verde | | 1 | 1 | | | | | | | | |
| 19 | R742803 | Soporte componentes | | 1 | 1 | | | | | | | | |
| 20 | R772805 | Panel portamandos | | 1 | 1 | | | | | | | | |
| 21 | R663092 | Conector 2 vias | | 1 | 1 | | | | | | | | |
| 22 | R663090 | Conjunto termopar L=1500 | | 1 | 1 | | | | | | | | |
| 23 | R662659 | Pasamuros doble para sonda | | 1 | 1 | | | | | | | | |
| 24 | R692811 | Junta pasamuros doble | | 1 | 1 | | | | | | | | |
| 25 | R662652 | Bicono cierre sonda | | 1 | 1 | | | | | | | | |
| 26 | R662629 | Racord cierre sonda | | 1 | 1 | | | | | | | | |

| MOD. | HORNOS : HMM-20/21 | ZONA | SISTEMA ELECTRICO PORTAMANDOS | PLANO | C-1475 |
|---|---|---|---|---|---|

| ITEM | CODIGO | DENOMINACION | TEXTO | HMM-20/21 HMM-2-20/11 | HMM-20/21UL | | | | | | | | NOTAS |
|---|---|---|---|---|---|---|---|---|---|---|---|---|---|
| 27 | Q012021 | Tornillo exagonal M-4x10 | | 4 | 4 | | | | | | | | |
| 28 | Q042022 | Tornillo avellanado M-4x15 | | 2 | 2 | | | | | | | | |
| 29 | Q412002 | Remache tubular Ø 4x7,5 | | 4 | 4 | | | | | | | | |
| 30 | R092633 | Retenedor de sonda | | 2 | 2 | | | | | | | | |
| 31 | R093019 | Conjunto sonda nucleo | | 1 | 1 | | | | | | | | |
| 32 | Q412002 | Remache tubular Ø 4x7,5 | | 2 | 2 | | | | | | | | |
| 33 | R672643 | Soporte de sonda | | 1 | 1 | | | | | | | | |

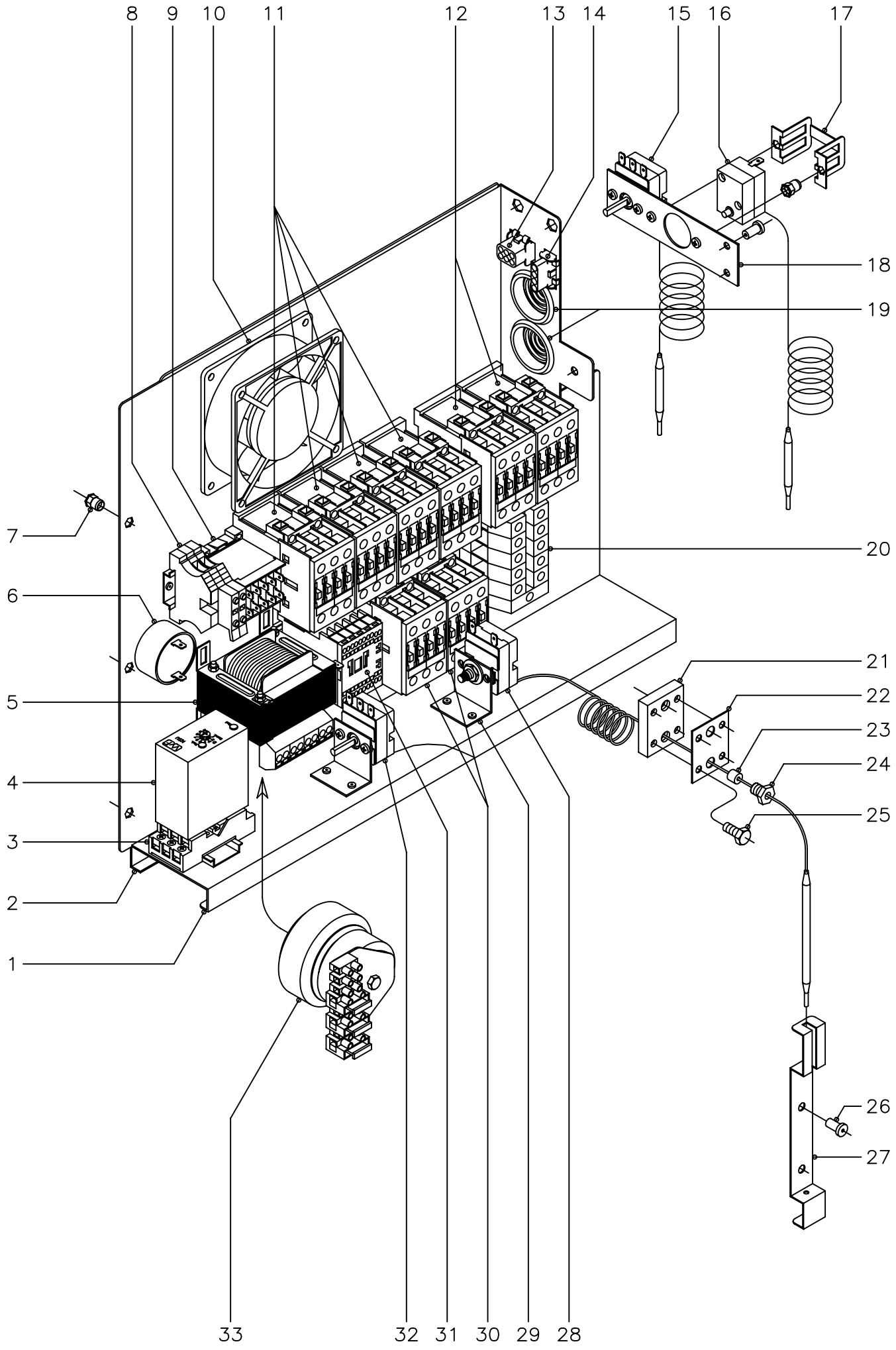


| N plano | Firma | Fecha | Aparato | Lamina | |
|---|---|---|---|---|---|
| C−1476 | | 11−2003 | CUADRO ELECTRICO<br>HORNOS HMM−20/21 | 8 | Fagor Industrial S.Coop.<br>Oñate |

| MOD. | HORNOS : HMM-20/21 | ZONA | CUADRO ELECTRICO | PLANO | C-1476 |
|---|---|---|---|---|---|

| ITEM | CODIGO | DENOMINACION | TEXTO | HMM-20/21 HMM-2-20/11 | HMM-20/21UL | | | | | | | | NOTAS |
|---|---|---|---|---|---|---|---|---|---|---|---|---|---|
| 1 | R143001 | Panel cuadro electrico | | 1 | 1 | | | | | | | | |
| 2 | R663018 | Contraguia panel cuadro | | 1 | 1 | | | | | | | | |
| | Q412002 | Remache tubular Ø4x7,5 | | 7 | 7 | | | | | | | | |
| 3 | R743009 | Base enchufable | | 1 | 1 | | | | | | | | |
| | Z123018 | Guia contactor L=55 | | 1 | 1 | | | | | | | | |
| 4 | R343072 | Detector de niveles | | 1 | - | | | | | | | | |
| 4 | R743031 | Detector de niveles | | - | 1 | | | | | | | | |
| 5 | R503005 | Transformador | | 1 | 1 | | | | | | | | |
| 6 | R693067 | Zumbador | | 1 | 1 | | | | | | | | |
| 7 | Q221342 | Remache exagonal M-5 | | 3 | 3 | | | | | | | | |
| 8 | R073005 | Bornas portafusibles | | 2 | 2 | | | | | | | | |
| | P184011 | Cartucho fusible 4 A. | | 2 | 2 | | | | | | | | |
| | Z263303 | Tope final | | 1 | 1 | | | | | | | | |
| 9 | Z683087 | Contactor 3TF20 01 - 3AL2 (230 V.) | | 1 | 1 | | | | | | | | |
| | Z263303 | Tope final | | 1 | 1 | | | | | | | | |
| 10 | Z103066 | Ventilador | | 1 | 1 | | | | | | | | |
| 11 | X183011 | Contactor 3RT-1024-1AN20 230V. | | 4 | 4 | | | | | | | | |
| | R693009 | Guia contactor L=250 | | 1 | 1 | | | | | | | | |
| 12 | X183011 | Contactor 3RT-1024-1AN20 230V. | | 2 | 2 | | | | | | | | |
| | Z403016 | Guia contactor L=100 | | 1 | 1 | | | | | | | | |
| 13 | - | Conector hembra 6 vias | | 1 | 1 | | | | | | | | |
| 14 | - | Conector hembra 4 vias | | 1 | 1 | | | | | | | | |
| 15 | R343100 | Termostato de condensacion | | 1 | 1 | | | | | | | | |
| | Q153111 | Tornillo alomado M-4x8 | | 2 | 2 | | | | | | | | |
| 16 | Z213014 | Termostato Tecasa de seguridad | | 1 | 1 | | | | | | | | |
| 17 | Z203060 | Amarre limitador Tecasa | | 1 | 1 | | | | | | | | |
| | Q221341 | Remache exagonal M-4 | | 2 | 2 | | | | | | | | |
| | Q153111 | Tornillo alomado M-4x8 | | 2 | 2 | | | | | | | | |
| 18 | R673061 | Soporte amarre termostatos | | 1 | 1 | | | | | | | | |

| MOD. | HORNOS : HMM-20/21 | ZONA | CUADRO ELECTRICO | PLANO | C-1476 |
|---|---|---|---|---|---|

| ITEM | CODIGO | DENOMINACION | TEXTO | HMM-20/21 HMM-2-20/11 | HMM-20/21UL | | | | | | | | NOTAS |
|---|---|---|---|---|---|---|---|---|---|---|---|---|---|
| | Q412002 | Remache tubular Ø4x7,5 | | 2 | 2 | | | | | | | | |
| 19 | N103013 | Pasacables | | 2 | 2 | | | | | | | | |
| 20 | R143011 | Borne gris fases 70 | | 3 | 3 | | | | | | | | |
| | R143012 | Borne azul neutro 70 | | 1 | 1 | | | | | | | | |
| | Z103035 | Borne verde-amarillo tierra 35 | | 1 | 1 | | | | | | | | |
| | Z683096 | Tope final 35 | | 1 | 1 | | | | | | | | |
| | Z683068 | Señalizacion bornes | | 1 | 1 | | | | | | | | |
| | R663055 | Guia contactor 120 | | 1 | 1 | | | | | | | | |
| 21 | R662659 | Pasamuros doble para sonda | | 1 | 1 | | | | | | | | |
| 22 | R692811 | Junta pasamuros doble | | 1 | 1 | | | | | | | | |
| 23 | R662662 | Junta cierre bulbo limitador | | 1 | 1 | | | | | | | | |
| 24 | R662629 | Racord cierre sonda | | 1 | 1 | | | | | | | | |
| 25 | Q012021 | Tornillo exagonal M-4x10 | | 4 | 4 | | | | | | | | |
| 26 | Q412002 | Remache tubular Ø4x7,5 | | 2 | 2 | | | | | | | | |
| 27 | R662630 | Soporte de bulbo | | 1 | 1 | | | | | | | | |
| 28 | R243016 | Termostato limitador temperatura | | 1 | 1 | | | | | | | | |
| 29 | R343039 | Soporte de termostatos | | 2 | 2 | | | | | | | | |
| 30 | X183011 | Contactor 3RT-1024-1AN20 230V. | | 2 | 2 | | | | | | | | |
| 31 | Z203050 | Contactor sirius 3RT-1016-2AP01 | | 1 | 1 | | | | | | | | |
| | Z123019 | Guia contactor 175 | | 1 | 1 | | | | | | | | |
| 32 | R343018 | Termostato a tubo retorno vapor | | 1 | 1 | | | | | | | | |
| 33 | R723063 | Transformador UL | | - | 1 | | | | | | | | |
| | | | | | | | | | | | | | |
| | | | | | | | | | | | | | |
| | | | | | | | | | | | | | |
| | | | | | | | | | | | | | |
| | | | | | | | | | | | | | |
| | | | | | | | | | | | | | |
| | | | | | | | | | | | | | |

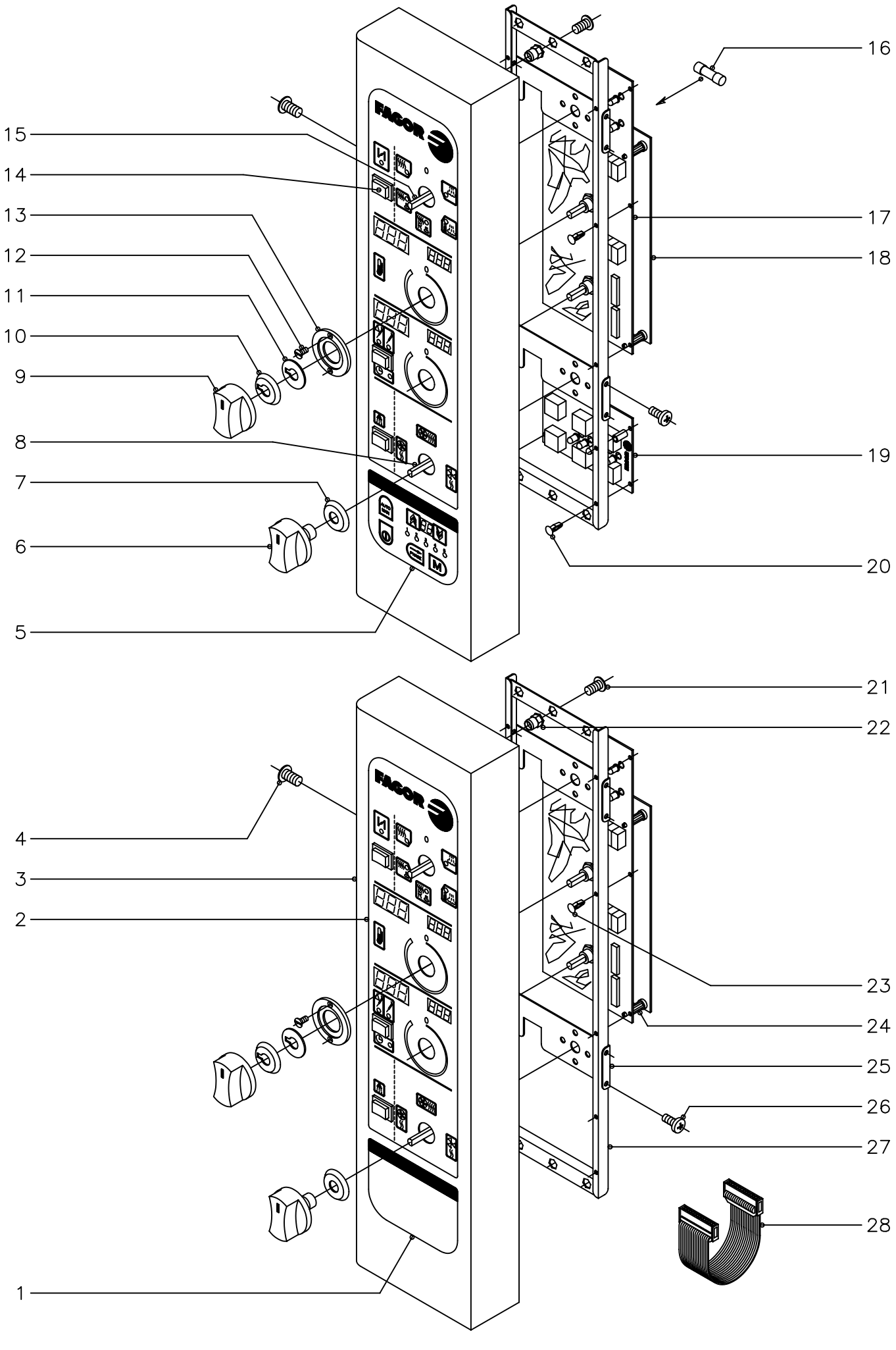


| N plano | Firma | Fecha | Aparato | Lamina | |
|---|---|---|---|---|---|
| C−1477 | | 11−2003 | SISTEMA ELECTRICO PORTAMANDOS<br>HORNOS HME, HMP−20/21 | 9 | Fagor Industrial S.Coop. FAGOR<br>Oñate |

| MOD. | HORNOS : HME, HMP-20/21 | ZONA | SISTEMA ELECTRICO PORTAMANDOS | PLANO | C-1477 |
|---|---|---|---|---|---|

| ITEM | CODIGO | DENOMINACION | TEXTO | HME-20/21 HME-2-20/11 | HMP-20/21 HMP-2-20/11 | | | | | | | | NOTAS |
|---|---|---|---|---|---|---|---|---|---|---|---|---|---|
| 1 | R663014 | Serigrafia inferior (neutra) | | 1 | - | | | | | | | | |
| 2 | R673000 | Serigrafia superior (controlador) | | 1 | 1 | | | | | | | | |
| 3 | R092837 | Panel portamandos | | 1 | 1 | | | | | | | | |
| 4 | Q152004 | Tornillo aplastado M-5x13 | | 3 | 3 | | | | | | | | |
| 5 | R663010 | Serigrafia inferior (programador) | | - | 1 | | | | | | | | |
| 6 | R663062 | Boton de mando (conmutadores) | | 2 | 2 | | | | | | | | |
| 7 | R663046 | Junta (conmutadores) | | 2 | 2 | | | | | | | | |
| 8 | R663026 | Conmutador de funciones | | 1 | 1 | | | | | | | | |
| 9 | R663063 | Boton de mando (electronica) | | 2 | 2 | | | | | | | | |
| 10 | R663045 | Junta (circuito impreso) | | 2 | 2 | | | | | | | | |
| 11 | R662810 | Arandela guia | | 2 | 2 | | | | | | | | |
| 12 | Q151346 | Tornillo avellanado M-3x5 | | 4 | 4 | | | | | | | | |
| 13 | R662809 | Guia boton de mando | | 2 | 2 | | | | | | | | |
| 14 | R663032 | Pulsador | | 3 | 3 | | | | | | | | |
| 15 | R663025 | Conmutador de funciones | | 1 | 1 | | | | | | | | |
| 16 | R663101 | Fusible 1 A. | | 1 | 1 | | | | | | | | |
| 17 | R663050 | Circuito impreso mando | | 1 | 1 | | | | | | | | |
| 18 | R663085 | Circuito impreso control | | 1 | 1 | | | | | | | | |
| 19 | R663004 | Circuito impreso programador | | - | 1 | | | | | | | | |
| 20 | R663036 | Remache fijacion circuito | | - | 4 | | | | | | | | |
| 21 | Q152004 | Tornillo aplastado M-5x13 | | 2 | 2 | | | | | | | | |
| 22 | Q221342 | Remache exagonal M-5 | | 2 | 2 | | | | | | | | |
| 23 | R663036 | Remache fijacion circuito | | 6 | 6 | | | | | | | | |
| 24 | R663035 | Separador | | 4 | 4 | | | | | | | | |
| 25 | R663008 | Soporte conmutadores | | 2 | 2 | | | | | | | | |
| 26 | Q151320 | Tornillo alomado M-4x6 | | 8 | 8 | | | | | | | | |
| 27 | R663005 | Soporte circuitos impresos | | 1 | 1 | | | | | | | | |
| 28 | R663102 | Conector de circuitos | | 1 | 1 | | | | | | | | |
| | | | | | | | | | | | | | |

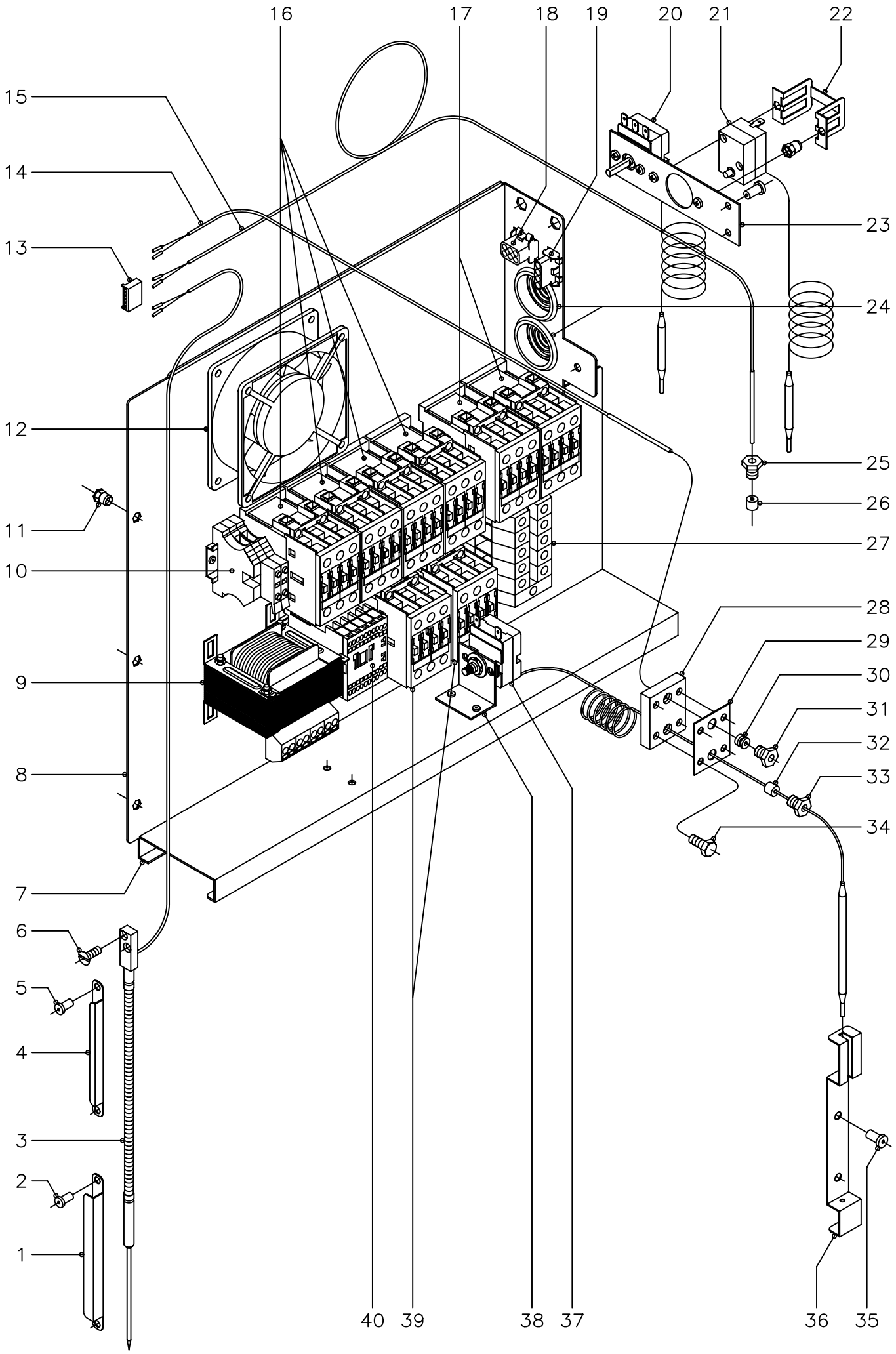


| N plano | Firma | Fecha | Aparato | Lamina | |
|---|---|---|---|---|---|
| C−1478 | | 11−2003 | CUADRO ELECTRICO<br>HORNOS HME, HMP−20/21 | 10 | Fagor Industrial S.Coop.<br>Onate |

| MOD. | HORNOS : HME, HMP-20/21 | ZONA | CUADRO ELECTRICO | PLANO | C-1478 |
|---|---|---|---|---|---|

| ITEM | CODIGO | DENOMINACION | TEXTO | HME-20/21 HME-2-20/11 | HMP-20/21 HMP-2-20/11 | | | | | | | | NOTAS |
|---|---|---|---|---|---|---|---|---|---|---|---|---|---|
| 1 | R672643 | Soporte de sonda | | 1 | 1 | | | | | | | | |
| 2 | Q412002 | Remache tubular Ø4x7,5 | | 2 | 2 | | | | | | | | |
| 3 | R093019 | Conjunto sonda nucleo | | 1 | 1 | | | | | | | | |
| 4 | R092633 | Retenedor de sonda | | 2 | 2 | | | | | | | | |
| 5 | Q412002 | Remache tubular Ø4x7,5 | | 2 | 2 | | | | | | | | |
| 6 | Q042022 | Tornillo avellanado M-4x15 | | 2 | 2 | | | | | | | | |
| 7 | R663018 | Contraguia panel cuadro | | 1 | 1 | | | | | | | | |
| | Q412002 | Remache tubular Ø4x7,5 | | 7 | 7 | | | | | | | | |
| 8 | R143001 | Panel cuadro electrico | | 1 | 1 | | | | | | | | |
| 9 | R503005 | Transformador | | 1 | 1 | | | | | | | | |
| 10 | R073005 | Bornas portafusibles | | 2 | 2 | | | | | | | | |
| | P184011 | Cartucho fusible 4 A. | | 2 | 2 | | | | | | | | |
| | Z263303 | Tope final | | 1 | 1 | | | | | | | | |
| 11 | Q221342 | Remache exagonal M-5 | | 3 | 3 | | | | | | | | |
| 12 | Z103066 | Ventilador | | 1 | 1 | | | | | | | | |
| 13 | R663093 | Conector 6 vias | | 1 | 1 | | | | | | | | |
| 14 | R663090 | Conjunto termopar L=1500 | | 1 | 1 | | | | | | | | |
| 15 | R663089 | Conjunto termopar L=2500 | | 1 | 1 | | | | | | | | |
| 16 | X183011 | Contactor 3RT-1024-1AN20 230V. | | 4 | 4 | | | | | | | | |
| | R693009 | Guia contactor L=250 | | 1 | 1 | | | | | | | | |
| 17 | X183011 | Contactor 3RT-1024-1AN20 230V. | | 2 | 2 | | | | | | | | |
| | Z403016 | Guia contactor L=100 | | 1 | 1 | | | | | | | | |
| 18 | - | Conector hembra 6vias | | 1 | 1 | | | | | | | | |
| 19 | - | Conector hembra 4vias | | 1 | 1 | | | | | | | | |
| 20 | R343100 | Termostato de condensacion | | 1 | 1 | | | | | | | | |
| | Q153111 | Tornillo alomado M-4x8 | | 2 | 2 | | | | | | | | |
| 21 | Z213014 | Termostato Tecasa de seguridad | | 1 | 1 | | | | | | | | |
| 22 | Z203060 | Amarre limitador Tecasa | | 1 | 1 | | | | | | | | |
| | Q221341 | Remache exagonal M-4 | | 2 | 2 | | | | | | | | |

| MOD. | HORNOS : HME, HMP-20/21 | ZONA | CUADRO ELECTRICO | PLANO | C-1478 |
|---|---|---|---|---|---|

| ITEM | CODIGO | DENOMINACION | TEXTO | HME-20/21 HME-2-20/11 | HMP-20/21 HMP-2-20/11 | | | | | | | | NOTAS |
|---|---|---|---|---|---|---|---|---|---|---|---|---|---|
| | Q153111 | Tornillo alomado M-4x8 | | 2 | 2 | | | | | | | | |
| 23 | R673061 | Soporte amarre termostatos | | 1 | 1 | | | | | | | | |
| | Q412002 | Remache tubular Ø4x7,5 | | 2 | 2 | | | | | | | | |
| 24 | N103013 | Pasacables | | 2 | 2 | | | | | | | | |
| 25 | R662629 | Racord cierre sonda | | 1 | 1 | | | | | | | | |
| 26 | 3712400 | Tubo-junta de silicona Ø8xØ3x20 | | 1 | 1 | | | | | | | | |
| 27 | R143011 | Borne gris fases 70 | | 3 | 3 | | | | | | | | |
| | R143012 | Borne azul neutro 70 | | 1 | 1 | | | | | | | | |
| | Z103035 | Borne verde-amarillo tierra 35 | | 1 | 1 | | | | | | | | |
| | Z683096 | Tope final 35 | | 1 | 1 | | | | | | | | |
| | Z683068 | Señalizacion bornes | | 1 | 1 | | | | | | | | |
| | R663055 | Guia contactor 120 | | 1 | 1 | | | | | | | | |
| 28 | R662659 | Pasamuros doble para sonda | | 1 | 1 | | | | | | | | |
| 29 | R692811 | Junta pasamuros doble | | 1 | 1 | | | | | | | | |
| 30 | R662652 | Bicono cierre sonda | | 1 | 1 | | | | | | | | |
| 31 | R662629 | Racord cierre sonda | | 1 | 1 | | | | | | | | |
| 32 | R662662 | Junta cierre bulbo limitador | | 1 | 1 | | | | | | | | |
| 33 | R662629 | Racord cierre sonda | | 1 | 1 | | | | | | | | |
| 34 | Q012021 | Tornillo exagonal M-4x10 | | 4 | 4 | | | | | | | | |
| 35 | Q412002 | Remache tubular Ø4x7,5 | | 2 | 2 | | | | | | | | |
| 36 | R662630 | Soporte de bulbo | | 1 | 1 | | | | | | | | |
| 37 | R243016 | Termostato limitador temperatura | | 1 | 1 | | | | | | | | |
| 38 | R343039 | Soporte de termostatos | | 1 | 1 | | | | | | | | |
| 39 | X183011 | Contactor 3RT-1024-1AN20 230V. | | 2 | 2 | | | | | | | | |
| 40 | Z203050 | Contactor sirius 3RT-1016-2AP01 | | 1 | 1 | | | | | | | | |
| | Z123019 | Guia contactor 175 | | 1 | 1 | | | | | | | | |
| | | | | | | | | | | | | | |
| | | | | | | | | | | | | | |
| | | | | | | | | | | | | | |

| MOD. | HORNOS : HMM, HME, HMP-20/21 | ZONA | VARIOS | PLANO | |
|---|---|---|---|---|---|

| ITEM | CODIGO | DENOMINACION | TEXTO | HMM-20/21 HMM-2-20/11 | HME-20/21 HME-2-20/11 | HMP-20/21 HMP-2-20/11 | HMM-20/21UL | | | | | | NOTAS |
|---|---|---|---|---|---|---|---|---|---|---|---|---|---|
| | R746501 | Folleto de instrucciones | | 1 | - | - | - | | | | | | |
| | R666501 | Folleto de instrucciones | | - | 1 | 1 | - | | | | | | |
| | R696516 | Folleto de instrucciones | | - | - | - | 1 | | | | | | |
| | | | | | | | | | | | | | |
| | R503003 | Esquema electrico adhesivo | | 1 | - | - | - | | | | | | Plano HC-72273 |
| | R143019 | Esquema electrico adhesivo | | - | 1 | 1 | - | | | | | | Plano HC-74199 |
| | R753025 | Esquema electrico adhesivo | | - | - | - | 1 | | | | | | Plano HC-74750 |
| | | | | | | | | | | | | | |
| | R503004 | Esquema electrico de montaje | | 1 | - | - | 1 | | | | | | Plano HD-12493 |
| | R143018 | Esquema electrico de montaje | | - | 1 | 1 | - | | | | | | Plano HD-12681 |
| | | | | | | | | | | | | | |
| | R503009 | Instalacion electrica HMM | | 1 | - | - | - | | | | | | |
| | R143017 | Instalacion electrica HME, HMP | | - | 1 | 1 | - | | | | | | |
| | R503008 | Instalacion electrica HMM, ( UL ) | | - | - | - | 1 | | | | | | |
| | R143005 | Cableado fuerza conveccion | | 2 | 2 | 2 | - | | | | | | |
| | R143015 | Cableado fuerza conveccion | | - | - | - | 2 | | | | | | |
| | R503000 | Instalacion fuerza cuadro electrico | | 1 | 1 | 1 | - | | | | | | |
| | R503006 | Instalacion fuerza cuadro electrico | | - | - | - | 1 | | | | | | |
| | R663095 | Cableado luz interior | | 1 | 1 | 1 | 1 | | | | | | |
| | R093021 | Cableado luz puerta | | 1 | 1 | 1 | - | | | | | | |
| | R093011 | Cableado luz puerta | | - | - | - | 1 | | | | | | |
| | R093004 | Cable auxiliar prolongador | | 2 | 2 | 2 | - | | | | | | |
| | R093012 | Cable auxiliar prolongador | | - | - | - | 2 | | | | | | |
| | 3713900 | Funda roja-negra Ø6,4x500 | | 1 | 1 | 1 | 1 | | | | | | |
| | R143004 | Cableado fuerza vapor | | 2 | 2 | 2 | - | | | | | | |
| | R143014 | Cableado fuerza vapor | | - | - | - | 2 | | | | | | |
| | R143009 | Instalacion doble potencia | | 1 | 1 | 1 | - | | | | | | |
| | R143016 | Instalacion doble potencia | | - | - | - | 1 | | | | | | |
| | | | | | | | | | | | | | |

| MOD. | HORNOS : HMM, HME, HMP-20/21 | ZONA | VARIOS | PLANO | |
|---|---|---|---|---|---|

| ITEM | CODIGO | DENOMINACION | TEXTO | HMM-20/21 HMM-2-20/11 | HME-20/21 HME-2-20/11 | HMP-20/21 HMP-2-20/11 | HMM-20/21UL | | | | | | NOTAS |
|---|---|---|---|---|---|---|---|---|---|---|---|---|---|
| | T133001 | Cableado conexión dos motores | | 1 | 1 | 1 | - | | | | | | |
| | T133035 | Cableado conexión dos motores | | - | - | - | 1 | | | | | | |
| | R663041 | Conexión controlador programador | | - | - | 1 | - | | | | | | |
| | | | | | | | | | | | | | |
| | R703014 | Indicador cambio de tension | | 1 | 1 | 1 | - | | | | | | |
| | R693008 | Indicador cambio de tension | | - | - | - | 1 | | | | | | |
| | R696504 | Etiqueta de sanidad | | - | - | - | 1 | | | | | | |
| | R696506 | Etiqueta puerta caliente | | - | - | - | 1 | | | | | | |
| | R696507 | Etiqueta de precaucion | | - | - | - | 2 | | | | | | |
| | R696508 | Etiqueta de fusibles | | - | - | - | 1 | | | | | | |
| | R696512 | Etiqueta de conexión | | - | - | - | 1 | | | | | | |
| | R746502 | Etiqueta descalcificacion | | - | - | - | 1 | | | | | | |
| | Z400515 | Bisagra (Amarre a pared) | | - | - | - | 1 | | | | | | |

| MOD. | HORNOS : HME, HMP-20/21 | ZONA | MODIFICACIONES A REALIZAR PARA LA VERSION ( 220/240 V., 3 ) | PLANO | C-1473 |
|---|---|---|---|---|---|

| ITEM | CODIGO | DENOMINACION | TEXTO | HME-20/21 HME-2-20/11 | HMP-20/21 HMP-2-20/11 | | | | | | | | NOTAS |
|---|---|---|---|---|---|---|---|---|---|---|---|---|---|
| | | | | | | | | | | | | | |
| | | **PIEZAS A ELIMINAR** | | | | | | | | | | | |
| 3 | R663033 | Conj. motor ( 380/400 V., 50/60 Hz.) | | 1 | 1 | | | | | | | | |
| | | | | | | | | | | | | | |
| | | | | | | | | | | | | | |
| | | | | | | | | | | | | | |
| | | | | | | | | | | | | | |
| | | | | | | | | | | | | | |
| | | **PIEZAS A INTRODUCIR** | | | | | | | | | | | |
| 3 | R663034 | Conj. motor ( 220/240 V., 50/60 Hz.) | | 1 | 1 | | | | | | | | |
| | | | | | | | | | | | | | |
| | | | | | | | | | | | | | |
| | | | | | | | | | | | | | |
| | | | | | | | | | | | | | |
| | | | | | | | | | | | | | |
| | | | | | | | | | | | | | |
| | | | | | | | | | | | | | |
| | | | | | | | | | | | | | |
| | | | | | | | | | | | | | |
| | | | | | | | | | | | | | |
| | | | | | | | | | | | | | |
| | | | | | | | | | | | | | |
| | | | | | | | | | | | | | |
| | | | | | | | | | | | | | |
| | | | | | | | | | | | | | |
| | | | | | | | | | | | | | |
| | | | | | | | | | | | | | |
| | | | | | | | | | | | | | |
| | | | | | | | | | | | | | |

| MOD. | HORNOS : HMM, HME, HMP-20/21 | ZONA | PIEZAS ESPECIFICAS ( VAUBAN ) | PLANO | C-1469 |
|---|---|---|---|---|---|

| ITEM | CODIGO | DENOMINACION | TEXTO | VECM-20/21 | **HMM-20/21 | VECE-20/21 | **HME-20/21 | VECP-20/21 | **HMP-20/21 | | | | | | | NOTAS |
|---|---|---|---|---|---|---|---|---|---|---|---|---|---|---|---|---|
| 7 | R743050 | Serigrafia superior (controlador) | | 1 | | - | | - | | | | | | | | |
| 7 | R673015 | Serigrafia superior (controlador) | | - | | 1 | | 1 | | | | | | | | |
| 8 | R703020 | Serigrafia inferior (conmutador) | | 1 | | - | | - | | | | | | | | |
| 8 | R663079 | Serigrafia inferior (neutra) | | - | | 1 | | - | | | | | | | | |
| 8 | R663080 | Serigrafia inferior (programador) | | - | | - | | 1 | | | | | | | | |
| s/n | R746520 | Folleto de instrucciones VECM | | 1 | | - | | - | | | | | | | | |
| | | | | | | | | | | | | | | | | |
| | | | | | | | | | | | | | | | | |
| | | | | | | | | | | | | | | | | |
| | | | | | | | | | | | | | | | | |
| | | | | | | | | | | | | | | | | |
| | | | | | | | | | | | | | | | | |
| | | | | | | | | | | | | | | | | |
| | | | | | | | | | | | | | | | | |
| | | | | | | | | | | | | | | | | |
| | | ** MODELOS EQUIVALENTES FAGOR | | | | | | | | | | | | | | |
| | | | | | | | | | | | | | | | | |
| | | | | | | | | | | | | | | | | |
| | | | | | | | | | | | | | | | | |
| | | | | | | | | | | | | | | | | |
| | | | | | | | | | | | | | | | | |
| | | | | | | | | | | | | | | | | |
| | | | | | | | | | | | | | | | | |
| | | | | | | | | | | | | | | | | |
| | | | | | | | | | | | | | | | | |
| | | | | | | | | | | | | | | | | |
| | | | | | | | | | | | | | | | | |

3N~50/60Hz 380/415V

# MODELO HMM-20/11 HMM-20/21

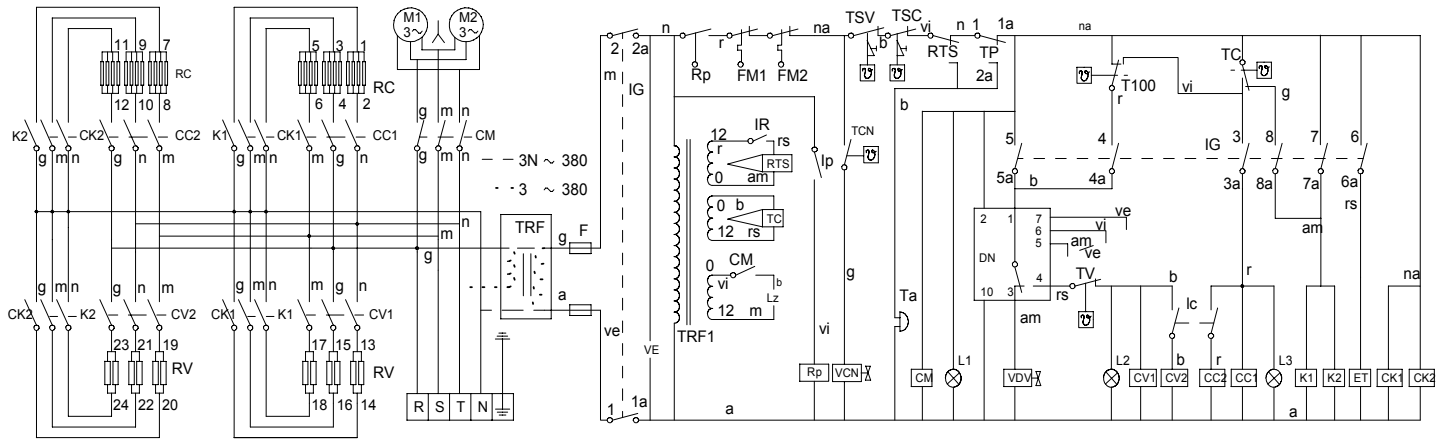


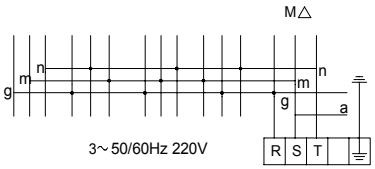


am/ve = amarillo/verde-yellow/green-jaune/vert
am = amarillo-yellow-jaune
a = azul-blue-bleu
b = blanco-white-blanc
g = gris-grey -gris
ve = verde-green-vert

na = naranja-orange-orange
r = rojo-red-rouge
m = marron-brown-marron
n = negro-black-noir
rs = rosa-pink-rose
vi = violeta-violet-violette

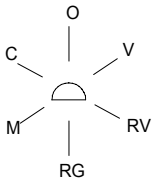


| Mode | 1 1a | 2 2a | 3 3a | 4 4a | 5 5a | 6 6a | 7 7a | 8 8a |
|---|---|---|---|---|---|---|---|---|
| OFF | | | | | | | | |
| VAPOR | X | X | | | X | | X | |
| Reg. Vapor | X | X | | X | | | X | |
| REGENERAC. | X | X | X | X | | | | X |
| MIXTO | X | X | X | X | | | | |
| CONVECCION | X | X | X | | | X | X | |

R-503003 HC-72273

IP = Interruptor puerta
IG = Interruptor general
F = Fusible
CM = Contactor motor
VDV = Electroválvula calderin
DN = Detector de nivel
FM1, FM2 = Térmico motor
TSV = Termostato seguridad vapor
TSC = Termostato seguridad cámara
LZ = Luz interior
IR = Selector regulador sonda nucleo
RTS = Regulador temperatura sonda nucleo
RV = Resistencias vapor
VE = Ventilador cuadro eléctrico
Ta = Timbre avisador
RP = Relé puerta

ET = Electroimán de apertura de tiro
Ic = Selector de potencia
VCN = Electroválvula de condensación de vapor
TC = Termostáto camara
T100 = Termostato fijo 100ºC
TV = Termostato vapor
M1, M2 = Motor
CC1, CC2 = Contactor resistencia cámara
CV1, CV2 = Contactor resistencia vapor
CK1, CK2, K1, K2 = Relé resistencias
TCN = Termostato de condensación vapor
RC = Resistencias cámara
TRF, TRF1 = Transformador
L1 = Lámpara de funcionamiento
L2 = Lámpara de calentamiento vapor
L3 = Lámpara de calentamiento cámara

| | | | | | | |
|---|---|---|---|---|---|---|
| | ESQUEMA TEORICO ADHESIVO | | | R-503003 | | |
| Nº | Pieza | Cant. | Material | Nº Clasificacion | Acabado | |
| Nº | Modificacion | | Propuesta de | Fecha | Tolerancias generales | |
| 1 | Modificar TSV, TSC y TCN | | Maillo | 2/10/96 | | |
| 2 | Modif. general (pasar a fabric. interior) | | Plazaola | 29/4/97 | | |
| 3 | Eliminar filtro interferencias | | Maillo | 25/4/98 | | |
| 4 | Introducir Rp | | Maillo | 25/2/02 | | |

| | Firma | Fecha |
|---|---|---|
| Dibujado | KONTXI | 11/3/98 |
| Proyectado | | |
| Comprobado | | |

FAGOR

Fagor Industrial,Koop.Elk, Mugatua

Mecanizado superficial

Escala

HORNO MIXTO HMM

Plano hau ez daiteke erabil ez berrizta gure baimenitz gabe

Plano numero HC-72273 -4

Sustituye al N°

Sustituido por

# 3N~50/60Hz 380/415V

# MODELO HME-20/11 HMP-20/11 HME-20/21 HMP-20/21

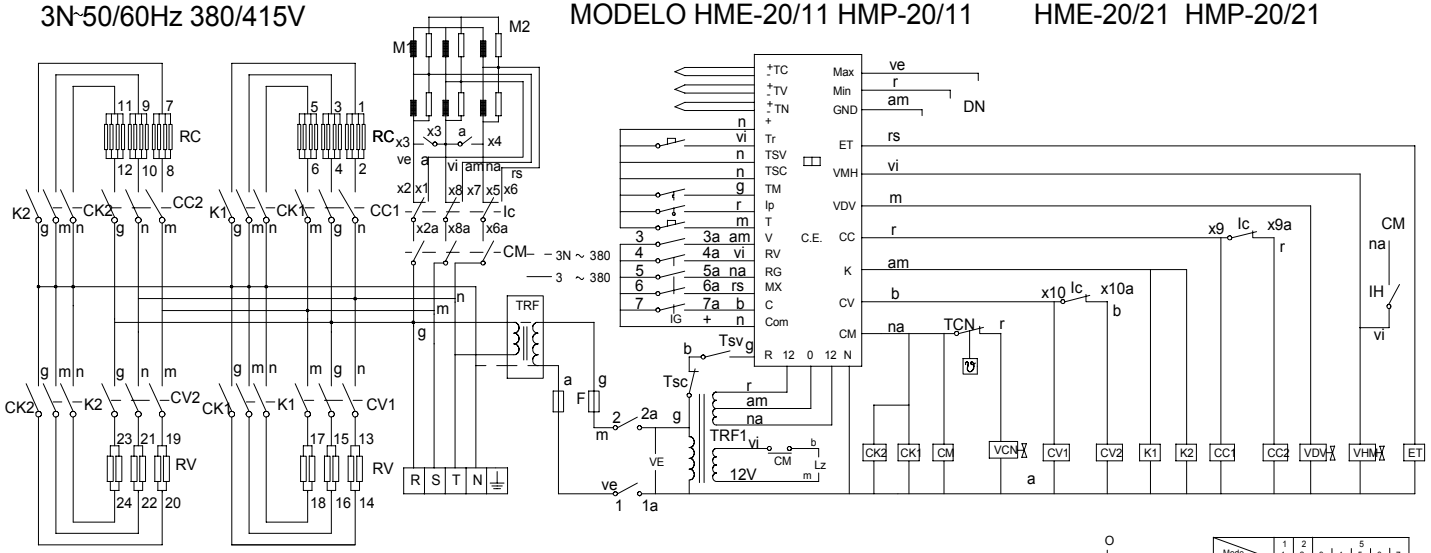


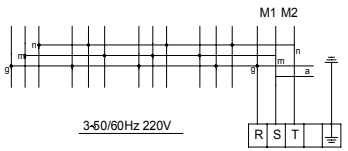


IP = Door's switch
IG = General switch
F = Fuse
CM = Motor's relay
VDV = Steamer's solenoid
DN = Water level control
TM = Motor's thermal protection
TSV = Steamer's security thermostat
TSC = Convection's security thermostat
LZ = Indoor light
VHM = Humidify water solenoid
CE = Electronic main control
RV = Steamer elements
VE = Control panel's fan
Tr = Chimney selector

TRF, TRF1 = Transformer
ET = Chimney solenoid
Ic =Power reduction switch
VCN = Steamer condenser solenoid
TV = Steam probe
TC = Convection probe
TN = Food probe
M1, M2 = Motor
CC1,CC2 = Heating air relays
CV1,CV2 = Heating water relays
CK1,CK2,K1,K2 = Elements relays
TCN = Steam condenser thermostat
IH = Humidify switch
T = Timer or Food probe selector
RC = Heating element

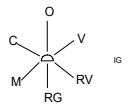


| Mode | 1 1a | 2 2a | 3a | 4a | 5 5a | 6a | 7a |
|---|---|---|---|---|---|---|---|
| OFF | | | | | | | |
| VAPOR | X | X | X | | | | |
| REG. VAPOR | X | X | | X | | | |
| REGENERAC. | X | X | | | X | | |
| MIXTO | X | X | | | | X | |
| CONVECCION | X | X | | | | | X |

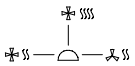

| Ic MAX MIN | x1 x1a | x2 x2a | x3 x3a | x4 x4a | x5 x5a | x6 x6a | x7 x7a | x8 x8a | x9 x9a | x10 x10A |
|---|---|---|---|---|---|---|---|---|---|---|
| | X | | X | X | | X | X | | | |
| | X | | X | X | | X | X | | X | X |
| | | X | | | X | | | X | | |

am/ve = amarillo/verde-yellow/green-jaune/vert
am = amarillo-yellow-jaune
a = azul-blue-bleu
b = blanco-white-blanc
g = gris-grey -gris
ve = verde-green-vert

na = naranja-orange-orange
r = rojo-red-rouge
m = marron-brown-marron
n = negro-black-noir
rs = rosa-pink-rose
vi = violeta-violet-violette

HC-74199

R-143019

| | | | | | | |
|---|---|---|---|---|---|---|
| | | | 3~50/60Hz 220V | | | |
| | ESQUEMA TEORICO ADHESIVO | | 3N~50/60Hz 380/415V | R-143019 | | |
| Nº | Pieza | Cant. | Material | Nº Clasificacion | Acabado | |
| Nº | Modificacion | | Propuesta de | Fecha | Tolerancias generales | |
| | | | | | <5± | 50–100± : |
| | | | | | 5–25± : | >100± |
| | | | | | 25–50± : | ∝± |

| | Firma | Fecha |
|---|---|---|
| Dibujado | Iratxe | 17/3/99 |
| Proyectado | | |
| Comprobado | | |
| Escala | | |

FAGOR

Fagor Industrial,Koop.Elk, Mugatua

Mecanizado superficial

# HORNO MIXTO HME HMP

Plano numero
HC-74199

Sustituye al N° hc-72270

Sustituido por

Plano hau ez daiteke erabil ez berrizta gure baimenitz gabe

# 3N 60Hz 208/220/240V

# MODEL HMM-20/11 UL, HMM-20/21 UL

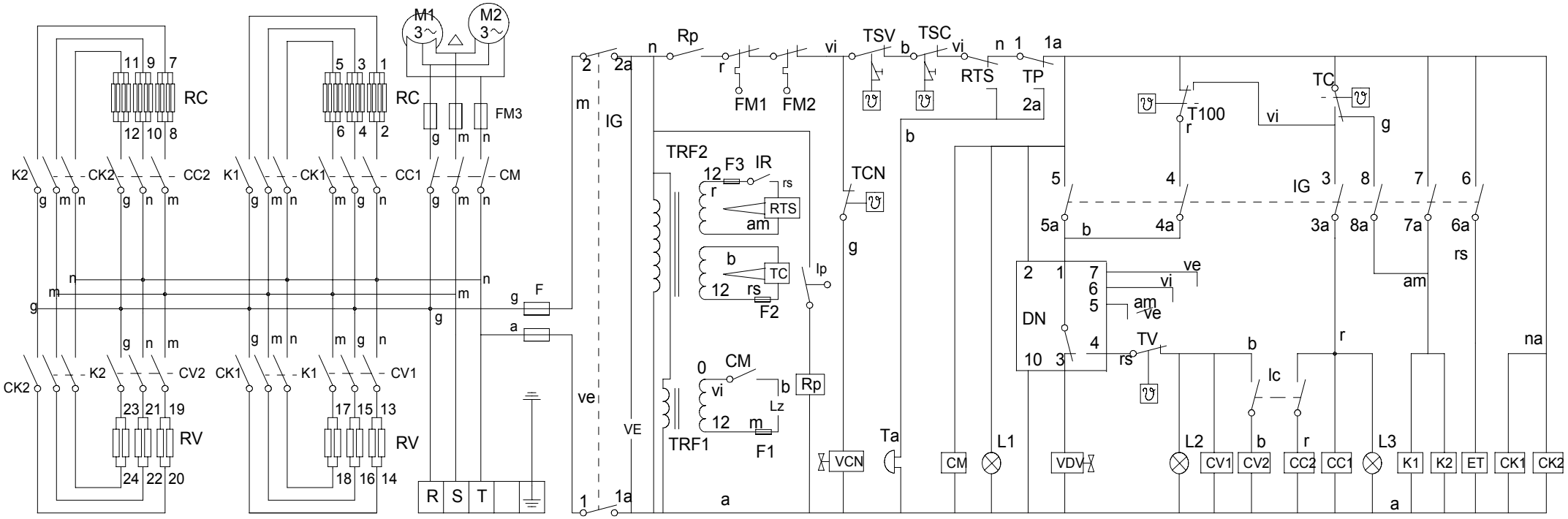


FM3 = Motor fuse
IP = Door's switch
IG = General switch
F = Fuse
CM = Motor's relay
VDV = Steamer's solenoid
DN = Water level control
FM1, FM2 = Motor's thermal protection
TSV = Steamer's security thermostat
TSC = Convection's security thermostat
LZ = Indoor light
IR = Probe selector
RTS = Probe controller
RV = Steamer elements

ET = Chimney solenoid
Ic = Power reduction switch
VCN = Steamer condenser solenoid
TC = Convection thermostat
T100 = 100 °C thermostat
TV = Steamer's thermostat
M1, M2 = Motor
CC1, CC2 = Heating air relays
CV1, CV2 = Heating water relays
CK1, CK2, K1, K2 = Elements relays
TCN = Steam condenser thermostat
RC = Heating element
TRF2= Transformer (Electronic thermostat)

VE = Control panel's fan
Ta = Alarm
Tp = Manual Timer
F1, F2, F3 = Transformer fuse
TRF1 = Transformer (Indoor light)
L1 = Pilot lamp (on/off)
L2 = Pilot lamp (Heating water)
L3 = Pilot lamp (Heating air)
Rp = Door's relay

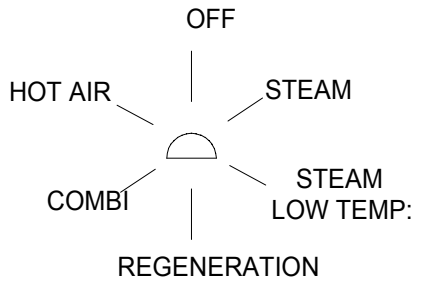


| Mode | 1<br>1a | 2<br>2a | 3<br>3a | 4<br>4a – 5a | 5 – 6 – 7<br>6a | <br>7a – 8a | 8 |
|---|---|---|---|---|---|---|---|
| OFF | | | | | | | |
| STEAM | X | X | | | X | X | |
| STEAM LOW TEMP | X | X | | X | | X | |
| REGENERATION | X | X | X | X | | | X |
| COMBI | X | X | X | X | | | |
| HOT AIR | X | X | X | | X | X | |

am/ve = amarillo/verde-yellow/green-jaune/vert
am = amarillo-yellow-jaune
a = azul-blue-bleu
b = blanco-white-blanc
g = gris-grey -gris
ve = verde-green-vert

na = naranja-orange-orange
r = rojo-red-rouge
m = marron-brown-marron
n = negro-black-noir
rs = rosa-pink-rose
vi = violeta-violet-violette

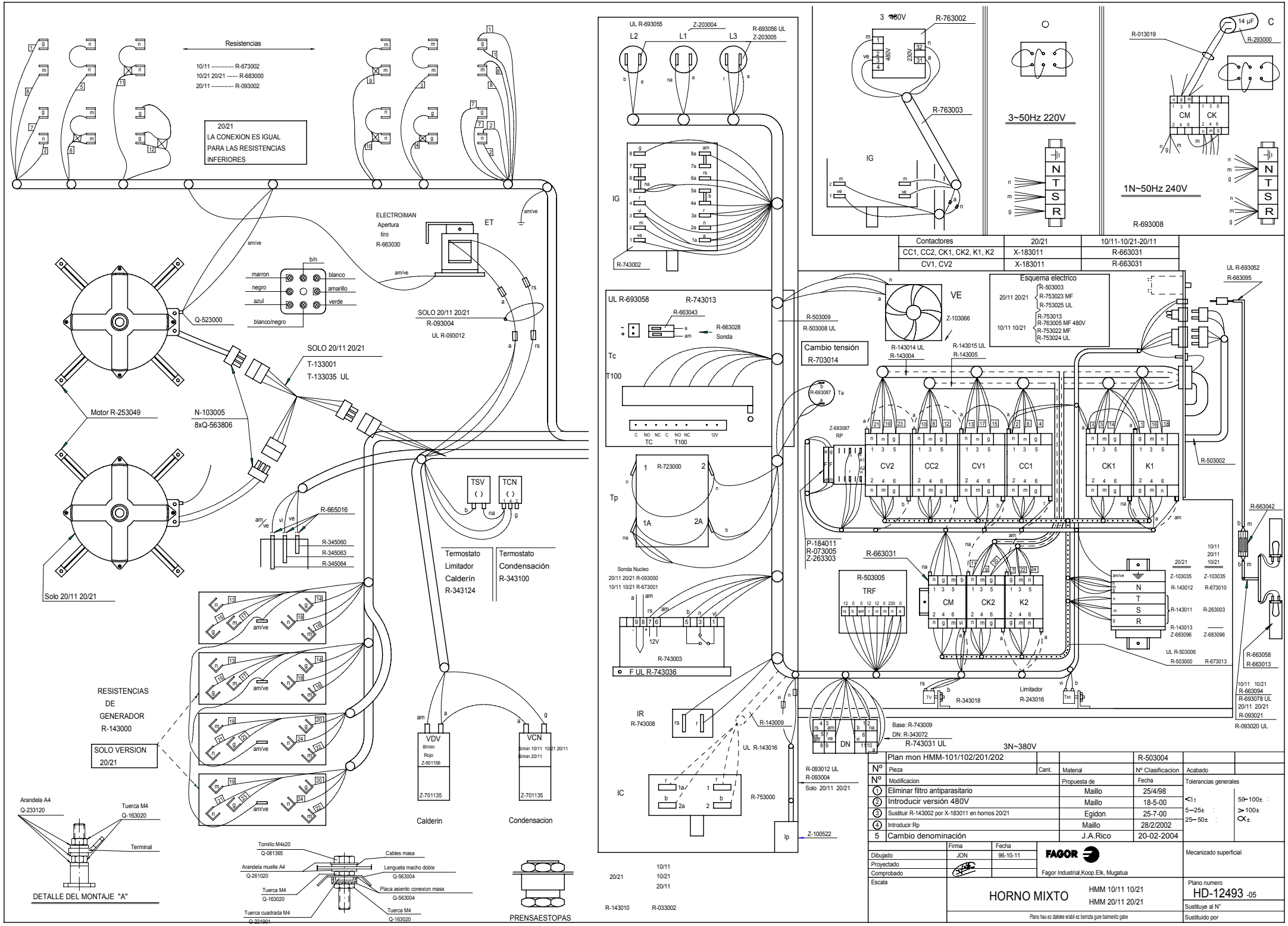
Resistencias
10/11 ---------- R-673002
10/21 20/21 ------ R-683000
20/11 ---------- R-093002
20/21
LA CONEXION ES IGUAL
PARA LAS RESISTENCIAS
INFERIORES
ELECTROIMAN
Apertura
tiro
R-663030
ET
SOLO 20/11 20/21
R-093004
UL R-093012
SOLO 20/11 20/21
T-133001
T-133035 UL
Q-523000
marron
negro
azul
blanco/negro
blanco
amarillo
verde
b/n
Motor R-253049
N-103005
8xQ-563806
Solo 20/11 20/21
R-665016
R-345060
R-345063
R-345064
TSV
TCN
Termostato
Limitador
Calderín
R-343124
Termostato
Condensación
R-343100
RESISTENCIAS
DE
GENERADOR
R-143000
SOLO VERSION
20/21
VDV
8l/min
Rojo
Z-601156
Z-701135
VCN
Z-701135
Calderin
Condensacion
Arandela A4
Q-233120
Tuerca M4
Q-163020
Terminal
DETALLE DEL MONTAJE "A"
Tornillo M4x20
Q-081365
Arandela muelle A4
Q-261020
Tuerca M4
Q-163020
Tuerca cuadrada M4
Q-221901
Cables masa
Lengueta macho doble
Q-563004
Placa asiento conexion masa
Q-563004
Tuerca M4
Q-163020
PRENSAESTOPAS
UL R-693055
Z-203004
R-693056 UL
Z-203005
L2
L1
L3
IG
R-743002
UL R-693058
R-743013
R-663043
R-663028
Sonda
Tc
T100
TC
T100
R-723000
Tp
1A
2A
Sonda Nucleo
20/11 20/21 R-093000
10/11 10/21 R-673001
12V
R-743003
F UL R-743036
IR
R-743008
R-143009
UL R-143016
IC
R-753000
R-093012 UL
R-093004
Solo 20/11 20/21
Z-100522
lp
20/21
10/11
10/21
20/11
R-143010
R-033002
3 380V
R-763002
R-763003
IG
3~50Hz 220V
1N~50Hz 240V
R-693008
14 µF
C
R-013019
R-293000
CM
CK
N
T
S
R
Contactores
20/21
10/11-10/21-20/11
CC1, CC2, CK1, CK2, K1, K2
X-183011
R-663031
CV1, CV2
X-183011
R-663031
VE
Z-103066
R-503009
R-503008 UL
Cambio tensión
R-703014
R-143014 UL
R-143004
R-143015 UL
R-143005
Esquema electrico
20/11 20/21
R-503003
R-753023 MF
R-753025 UL
10/11 10/21
R-753013
R-763005 MF 480V
R-753022 MF
R-753024 UL
UL R-693052
R-663095
R-693087
Ta
Z-683087
RP
CV2
CC2
CV1
CC1
CK1
K1
R-503002
R-663042
P-184011
R-073005
Z-263303
R-663031
R-503005
TRF
CM
CK2
K2
R-143012
R-673010
R-143011
R-263003
R-143013
Z-683096
Z-683096
Z-103035
Z-103035
UL R-503006
R-503000
R-673013
R-663058
R-663013
R-663094
R-693078 UL
20/11 20/21
R-093021
R-093020 UL
TV
R-343018
Limitador
R-243016
Tsc
Base: R-743009
DN: R-343072
R-743031 UL
3N~380V
Plan mon HMM-101/102/201/202
R-503004
Nº Pieza
Cant.
Material
Nº Clasificacion
Acabado
Nº Modificacion
Propuesta de
Fecha
Tolerancias generales
1 Eliminar filtro antiparasitario
Maillo
25/4/98
2 Introducir versión 480V
Maillo
18-5-00
3 Sustituir R-143002 por X-183011 en hornos 20/21
Egidon
25-7-00
4 Introducir Rp
Maillo
28/2/2002
5 Cambio denominación
J.A.Rico
20-02-2004
Dibujado
JON
96-10-11
Proyectado
Comprobado
Escala
FAGOR
Fagor Industrial,Koop.Elk, Mugatua
Mecanizado superficial
HORNO MIXTO
HMM 10/11 10/21
HMM 20/11 20/21
Plano numero
HD-12493 -05
Sustituye al Nº
Sustituido por
Plano hau ez dateke erabil ez berrizta gure baimenitz gabe

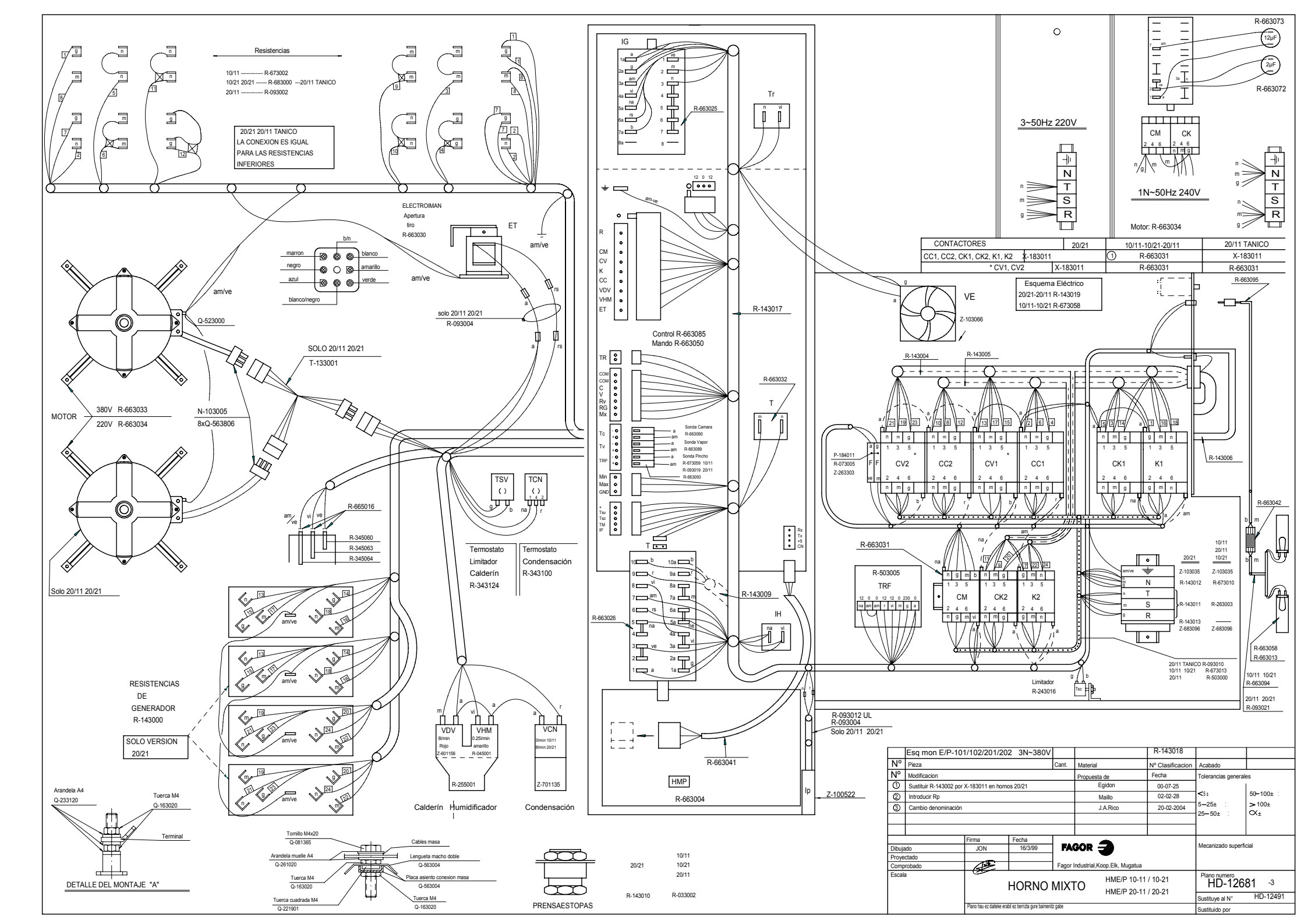


| CONTACTORES | 20/21 | 10/11-10/21-20/11 | 20/11 TANICO |
|---|---|---|---|
| CC1, CC2, CK1, CK2, K1, K2 | X-183011 | ① R-663031 | X-183011 |
| * CV1, CV2 | X-183011 | R-663031 | R-663031 |

| | | | | | |
|---|---|---|---|---|---|
| | Esq mon E/P-101/102/201/202 3N~380V | | | R-143018 | |
| Nº | Pieza | Cant. | Material | Nº Clasificacion | Acabado |
| Nº | Modificacion | | Propuesta de | Fecha | Tolerancias generales |
| ① | Sustituir R-143002 por X-183011 en hornos 20/21 | | Egidon | 00-07-25 | <5± 50–100± |
| ② | Introducir Rp | | Maillo | 02-02-28 | 5–25± > 100± |
| ③ | Cambio denominación | | J.A.Rico | 20-02-2004 | 25–50± ○± |

| | Firma | Fecha |
|---|---|---|
| Dibujado | JON | 16/3/99 |
| Proyectado | | |
| Comprobado | | |
| Escala | | |

FAGOR
Fagor Industrial,Koop.Elk, Mugatua

Mecanizado superficial

HORNO MIXTO
HME/P 10-11 / 10-21
HME/P 20-11 / 20-21

Plano numero HD-12681 -3
Sustituye al Nº HD-12491
Sustituido por

Plano hau ez daiteke erabil ez berrizta gure baimenitz gabe