/A=PIANO CON ALZATINA
/A=SHELF+RIDGE
/A=PLATTE MIT RUECKLEISTE
/A=RAYON AVEC ETAGERE
/A=TOPE CON ELEV.

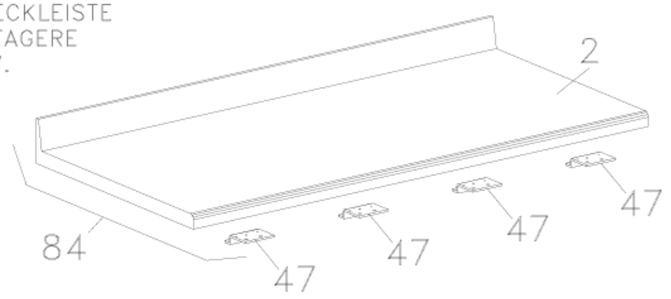


/X=PIANO SENZA ALZATINA
/X=SHELF WITHOUT RIDGE
/X=PLATTE OHNE RUECKLEISTE
/X=RAYON SANS ETAGERE
/X=TOPE SIN ELEV.

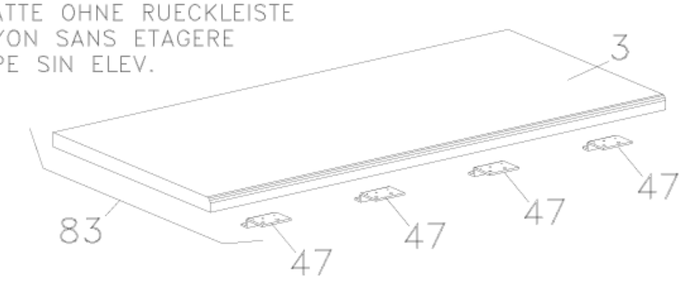


SOLO PER CASSETTI
DRAWERS ONLY
NUR FUER SCHBLADEN
SEULEMENTO POUR TIROIRS
SOLO GAVETAS

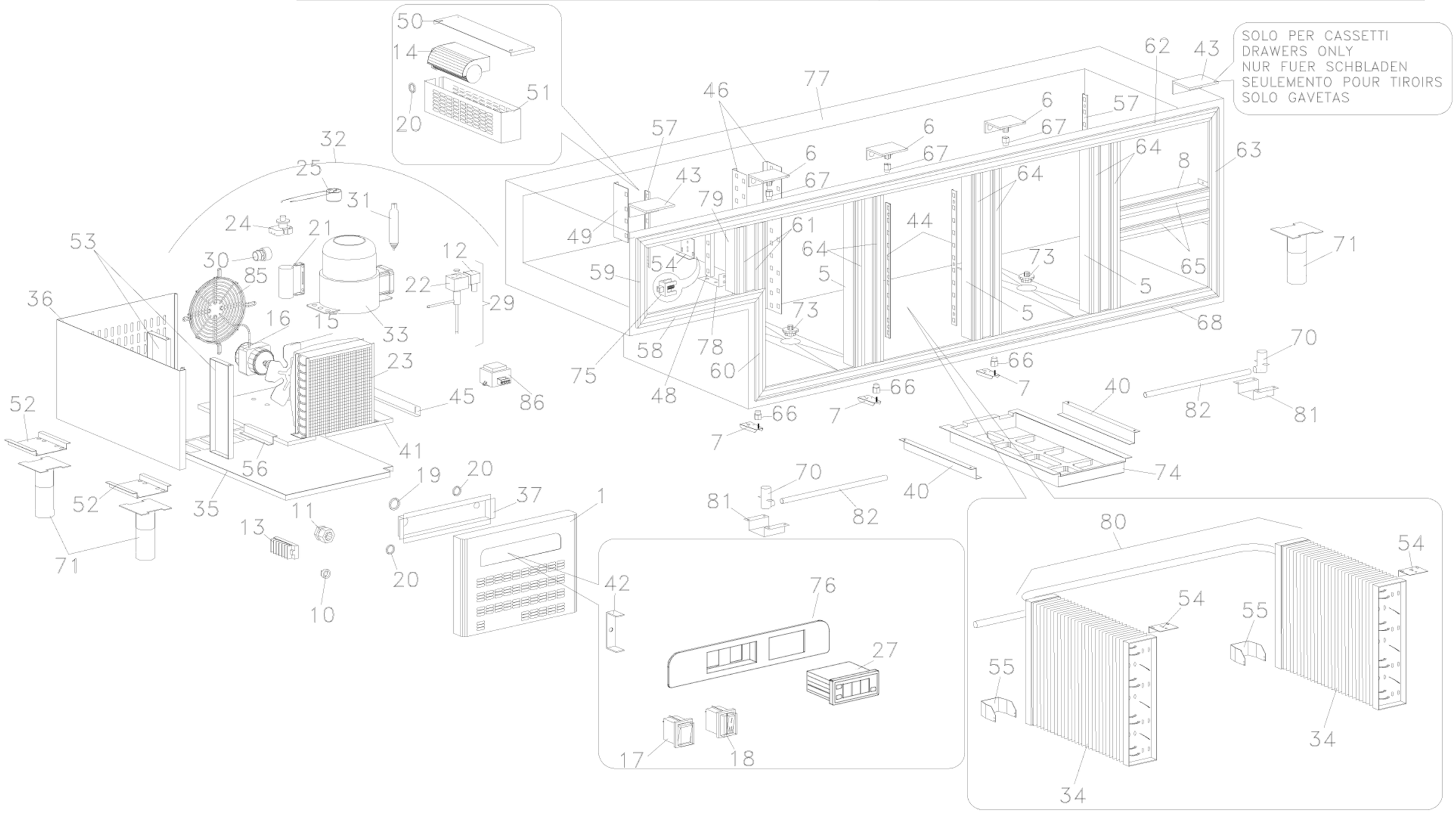

# Modello Typ Model Modele Modelo

| | | | | | | | | | | |
|---|---|---|---|---|---|---|---|---|---|---|
| | | KM1A<br>KM1A/X<br>KM1A/A | KM1A/2<br>KM1A/2X<br>KM1A/2A | KM1A/4<br>KM1A/4X<br>KM1A/4A | KM1A/11<br>KM1A/11X<br>KM1A/11A | KM1B<br>KM1B/X<br>KM1B/A | KM1B/2<br>KM1B/2X<br>KM1B/2A | KM1B/4<br>KM1B/4X<br>KM1B/4A | KM1B/6<br>KM1B/6X<br>KM1B/6A | KM1B/11<br>KM1B/11X<br>KM1B/11A |
| Num. Cassetti | | | | | | | | | | |
| Schublad | 1/2 | --- | 1 | 2 | --- | --- | 1 | 2 | 3 | --- |
| Drawers | 1/3 | --- | --- | --- | 1 | --- | --- | --- | --- | 1 |
| Tiroirs | 2/3 | --- | --- | --- | 1 | --- | --- | --- | --- | 1 |
| Gabetas | 1/2 K | 1 | 2 | 3 | 1 | 1 | 2 | 3 | 4 | 1 |

| | | | | | | | | |
|---|---|---|---|---|---|---|---|---|
| | KM1B/22<br>KM1B/22X<br>KM1B/22A | KM1C<br>KM1C/X<br>KM1C/A | KM1C/2<br>KM1C/2X<br>KM1C/2A | KM1C/4<br>KM1C/4X<br>KM1C/4A | KM1C/6<br>KM1C/6X<br>KM1C/6A | KM1C/8<br>KM1C/8X<br>KM1C/8A | KM1C/11<br>KM1C/11X<br>KM1C/11A | |
| Num. Cassetti | | | | | | | | |
| Schublad 1/2 | --- | --- | 1 | 2 | 3 | 4 | --- | |
| Drawers 1/3 | 2 | --- | --- | --- | --- | --- | 1 | |
| Tiroirs 2/3 | 2 | --- | --- | --- | --- | --- | 1 | |
| Gabetas 1/2 K | 1 | 1 | 2 | 3 | 4 | 5 | 1 | |

1/3
h=210mm

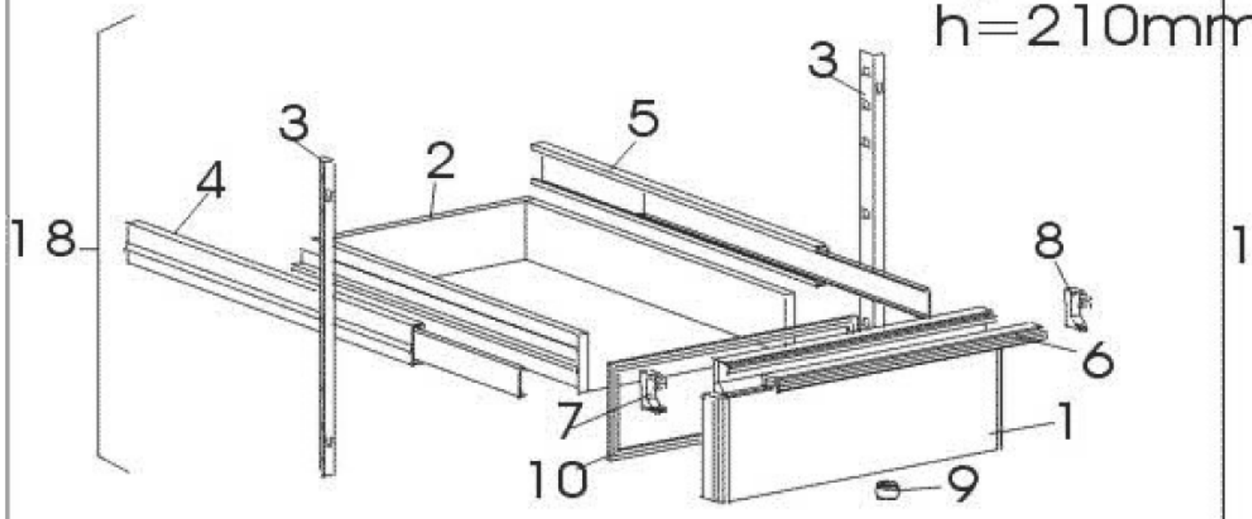


1/2
h=320mm

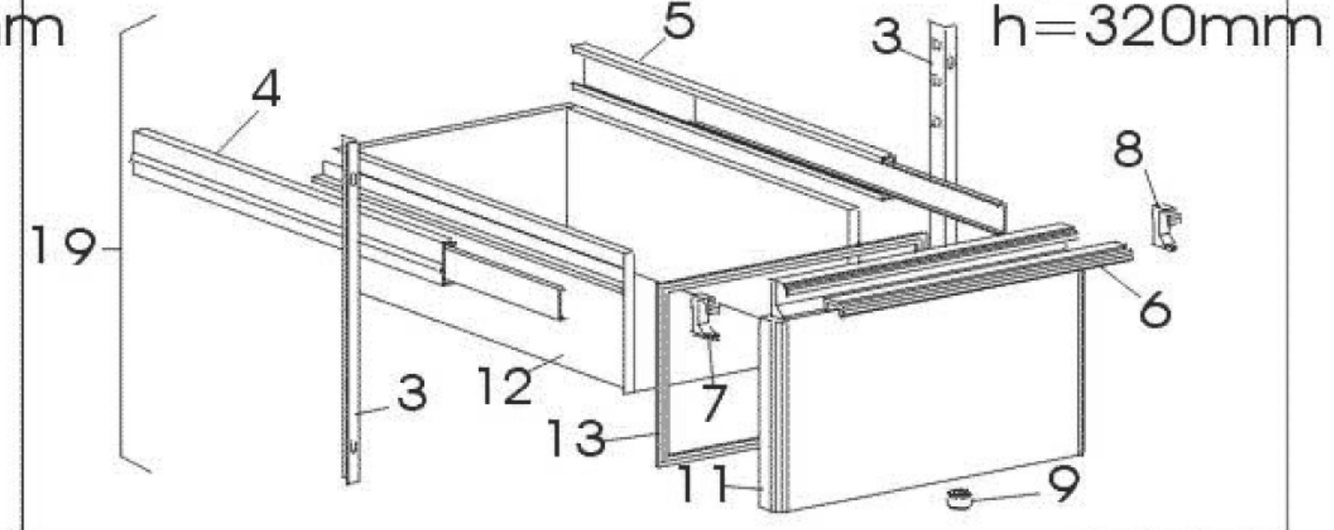


2/3
h=430mm

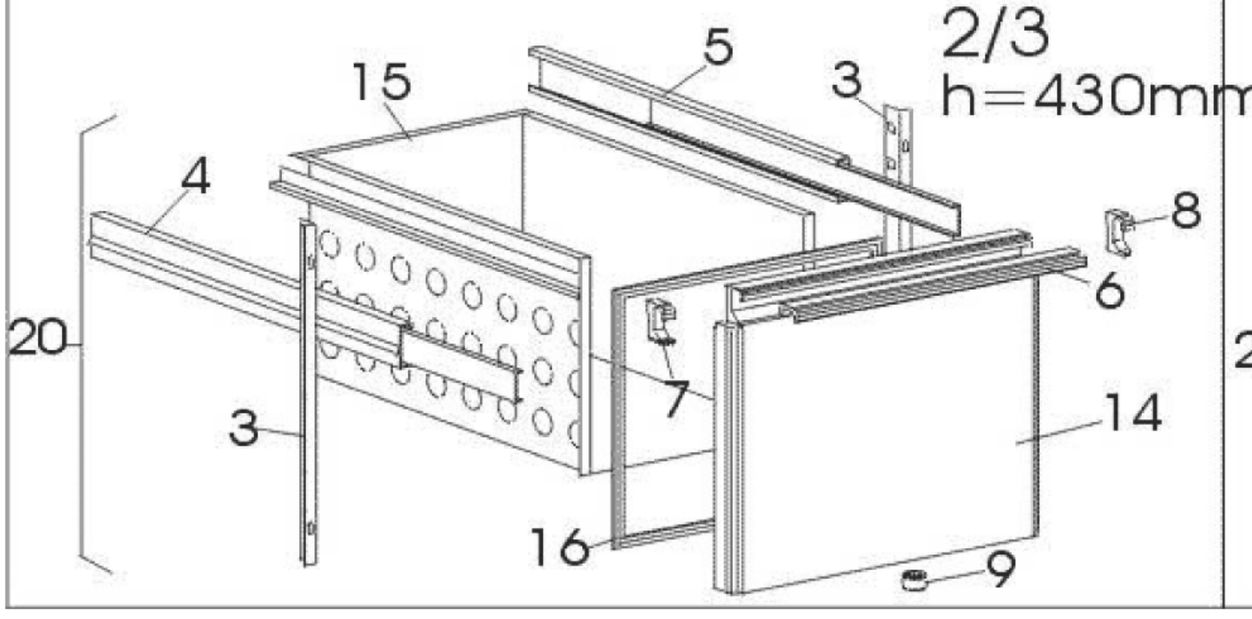


1/2 "F"
h=320mm

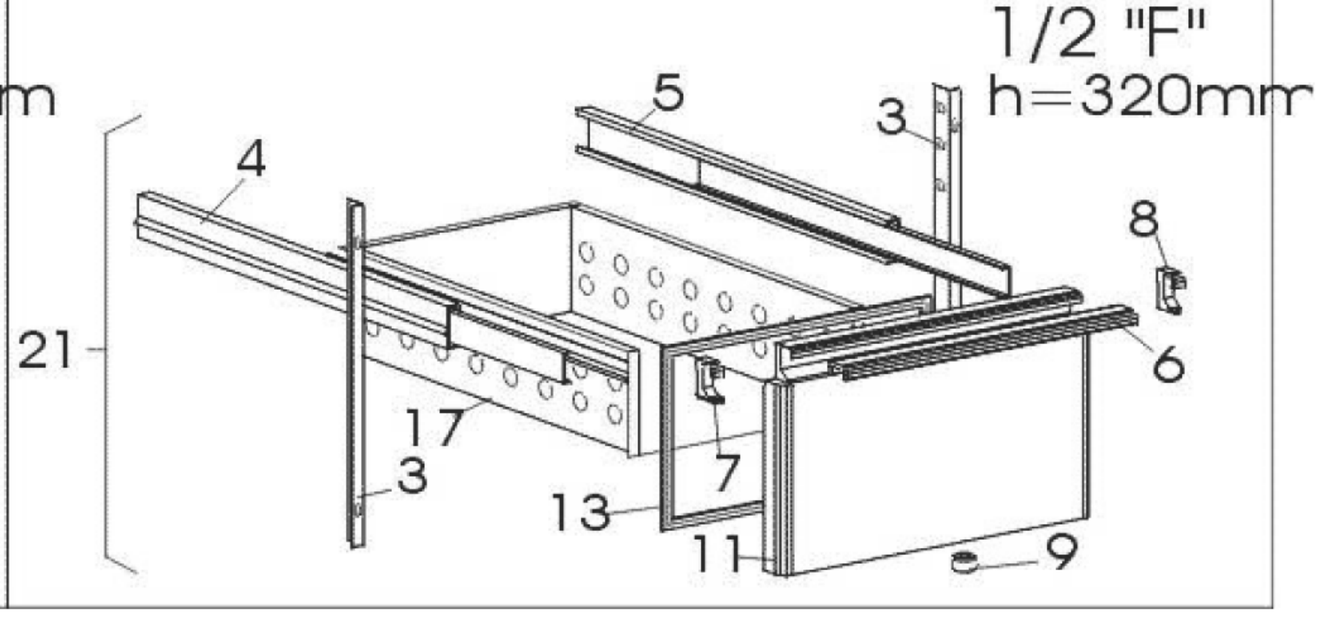

# Modello Typ Model Modele Modelo

| | | KM1A<br>KM1A/X<br>KM1A/A | KM1A/2<br>KM1A/2X<br>KM1A/2A | KM1A/4<br>KM1A/4X<br>KM1A/4A | KM1A/11<br>KM1A/11X<br>KM1A/11A | KM1B<br>KM1B/X<br>KM1B/A | KM1B/2<br>KM1B/2X<br>KM1B/2A | KM1B/4<br>KM1B/4X<br>KM1B/4A | KM1B/6<br>KM1B/6X<br>KM1B/6A | KM1B/11<br>KM1B/11X<br>KM1B/11A |
|---|---|---|---|---|---|---|---|---|---|---|
| Porte<br>Ture<br>Doors<br>Portes<br>Portas<br>Gabetas | SX | 1 | 1 | --- | 1 | 2 | 2 | 1 | --- | 2 |
| | DX | 1 | --- | --- | --- | 1 | --- | --- | --- | --- |

| | | KM1B/22<br>KM1B/22X<br>KM1B/22A | KM1C<br>KM1C/X<br>KM1C/A | KM1C/2<br>KM1C/2X<br>KM1C/2A | KM1C/4<br>KM1C/4X<br>KM1C/4A | KM1C/6<br>KM1C/6X<br>KM1C/6A | KM1C/8<br>KM1C/8X<br>KM1C/8A | KM1C/11<br>KM1C/11X<br>KM1C/11A |
|---|---|---|---|---|---|---|---|---|
| Porte<br>Ture<br>Doors<br>Portes<br>Portas<br>Gabetas | SX | 1 | 3 | 3 | 2 | 1 | --- | 3 |
| | DX | --- | 1 | --- | --- | --- | --- | --- |

SX

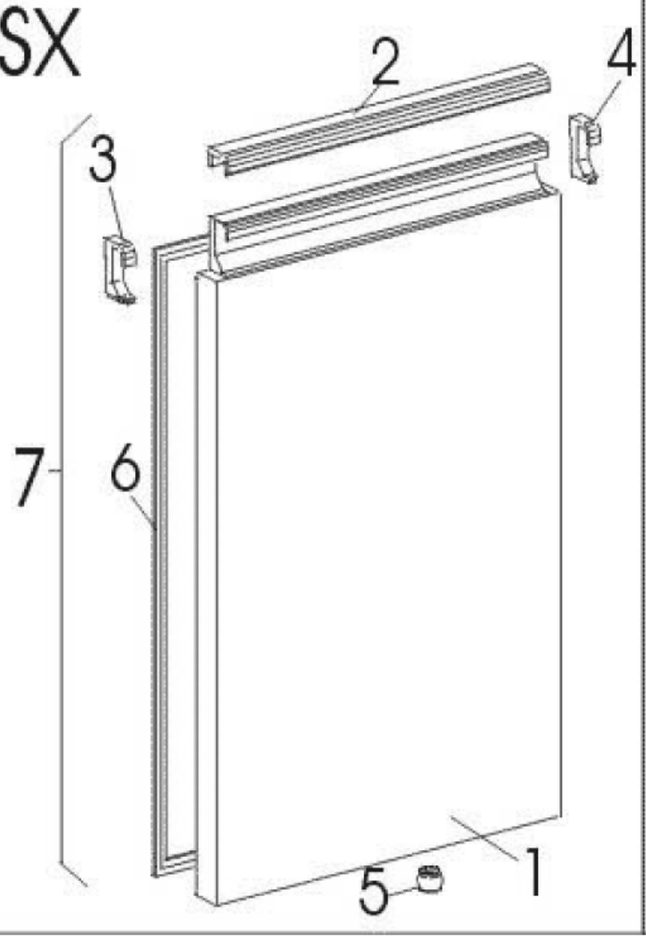


DX

