SIMAG

Electronic modular flaker

SP 125
SP 255

R 134 A - R 404 A VERSION

SPARE PARTS LIST
CATALOGO RICAMBI
CATALOGUE PIÈCES DÉTACHÉES
ERSATZTEILENKATALOG

090090.12 REV. 07/2006

PAGE PAGINA PAGE SEITE	TABLE OF CONTENTS	INDICE	TABLE DES MATIÉRES	INHALTVERZEICHNIS
1	TABLE OF CONTENTS	INDICE	TABLE DES MATIÉRES	INHALTVERZEICHNIS
2-3	UNIT PANELS	ASSIEME MOBILE	ENS. CARROSSERIE	MACHINENGEHAUSE
4-5	REFRIGERANT SYSTEM AIR COOLED	SISTEMA REFRIGERANTE RAFFR. AD ARIA	CIRCUIT FRIGORIFIQUE REFROID. A AIR	GEFRIERSYSTEM LUFTGEKÜHLT
6-7	REFRIGERANT SYSTEM WATER COOLED	SISTEMA REFRIGERANTE RAFFR. AD ACQUA	CIRCUIT FRIGORIFIQUE REFROID. A EAU	GEFRIERSYSTEM WASSERGEKÜHLT
8-9	WATER SYSTEM AND INSULATIONS	CIRCUITO IDRAULICO ED ISOLAMENTI	CIRCUIT HYDRAULIQUE ET INSULATIONS	WASSERKREISLAUF UND ISOLIERUNGEN
10-11	FREEZER AND GEAR REDUCER ASSY	ASSIEME FREEZER E RIDUTTORE	ENS. FREEZER ET MOTOREDUCTEUR	GEFRIERZYLINDER-GETRIEBEEINHEIT
12-13	P.C. BOARD AND SENSORS ASSY	SCHEDA ELETTRONICA E SENSORI	ENS. CARTE ELECTRONIQUE ET DETECTEURS	ELEKTRONISCHE KARTE UND TEMPERRATURFUEHLERENHEIT
14	COMPRESSOR AND ELECTRIC COMPONENT CHARTS	TABELLA COMPRESSORI E COMPONENTI ELETTRICI	LISTE DES COMPRESSEURS ET COMPOSANTS ELECTRIQUE	KOMPRESSOR UND ELEKTRISCHE BESTANDTEILE

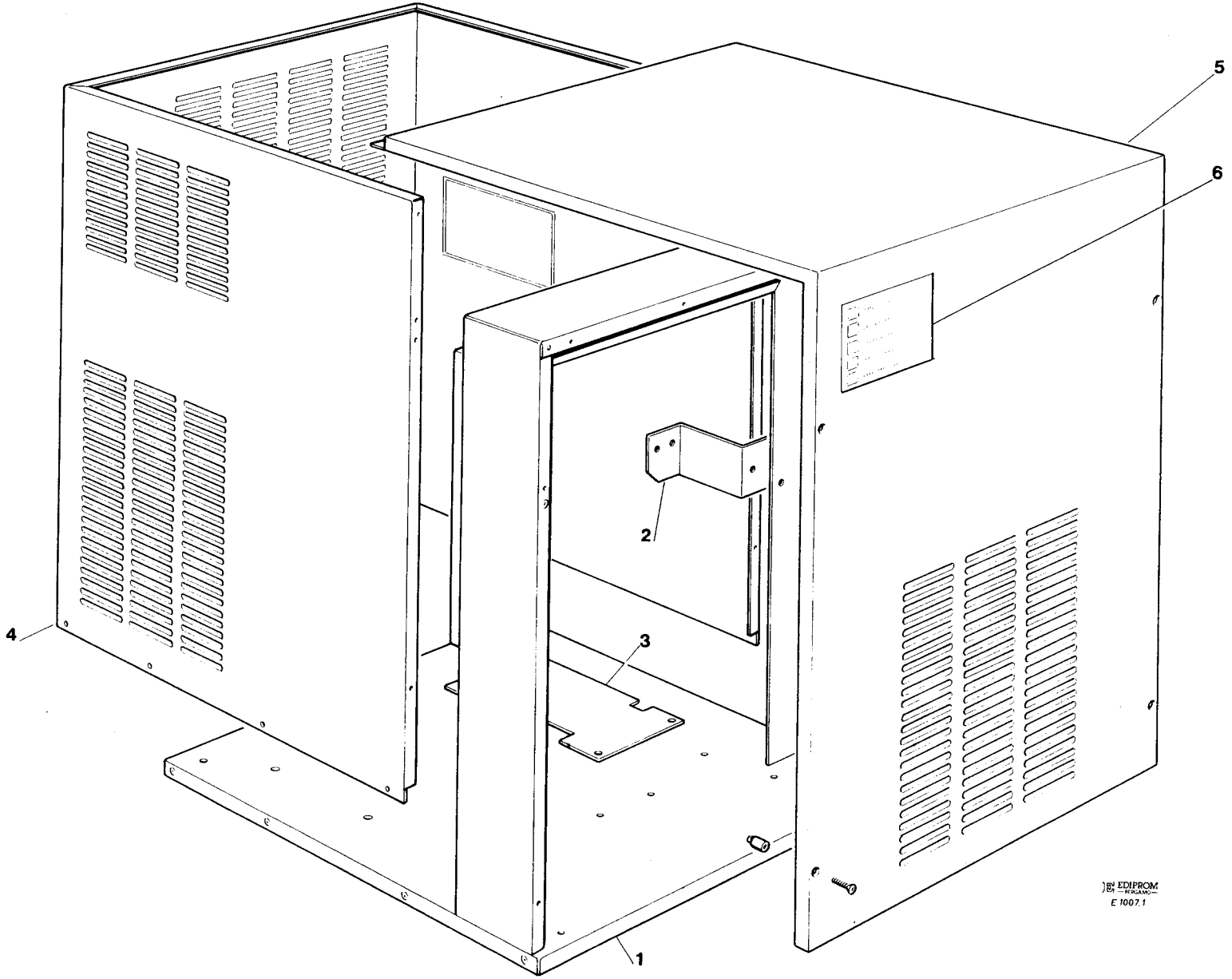
5
6
2
4
3
1
EDIPROM
E 1007.1

SP 125 - SP 255 - UNIT PANELS - ASSIEME MOBILE - ENS. CARROSSERIE - MACHINE GEHAUSE

ITEM NO POS NO REP. NO REF. NO	PART NO - CODICE REFERENCE - STUECK NR **SP 125**	 **SP 255**	DESCRIPTION	DESCRIZIONE	DESIGNATION	BESCHREIBUNG
1	781420 00	781420 00	FRAME ASSY S.S.	ASSIEME TELAIO ACCIAIO INOX	ENSAMBLE CHASSIS ACIER INOX	CHASSISRAHMEN EDELSTAHL
2	703221 00	703221 00	WATER RESERVOIR BRACKET	SUPPORTO VASCH. GALLEGGIANTE	SUPPORT FLOTTEUR	SCHWIMMERHALTER
3	704256 02	704256 01	GEAR MOTOR BASE	SUPPORTO MOTORIDUTTORE	SUPPORT MOTOREDUCTEUR	GETRIEBEMOTORHALTER
4	721863 02	721863 02	SIDES/REAR PANEL S.S.	PANNELLO LATERALE/POSTER. ACC. INOX	PANNEAU COTE/ARRIERE ACIER INOX	EDELSTAHL SEITEN-RÜCKWAND
5	721864 03	721864 03	FRONT/TOP PANEL S.S.	PANNELLO FRONTALE/SUPER. ACC. INOX	PANNEAU AVANT/SUP. ACIER INOX	EDELSTAHL FRONT-OBERWAND
6	650624 12	650624 12	LABEL	ADESIVO SEGNALETICO	ETIQUETTE	ETIKETT
*	650805 33	–	SP 125 LOGO	TARGHETTA SP 125	EMBLEME SP 125	SP 125 ABGEBILDET
*	–	650805 34	SP 255 LOGO	TARGHETTA SP 255	EMBLEME SP 255	SP 255 ABGEBILDET

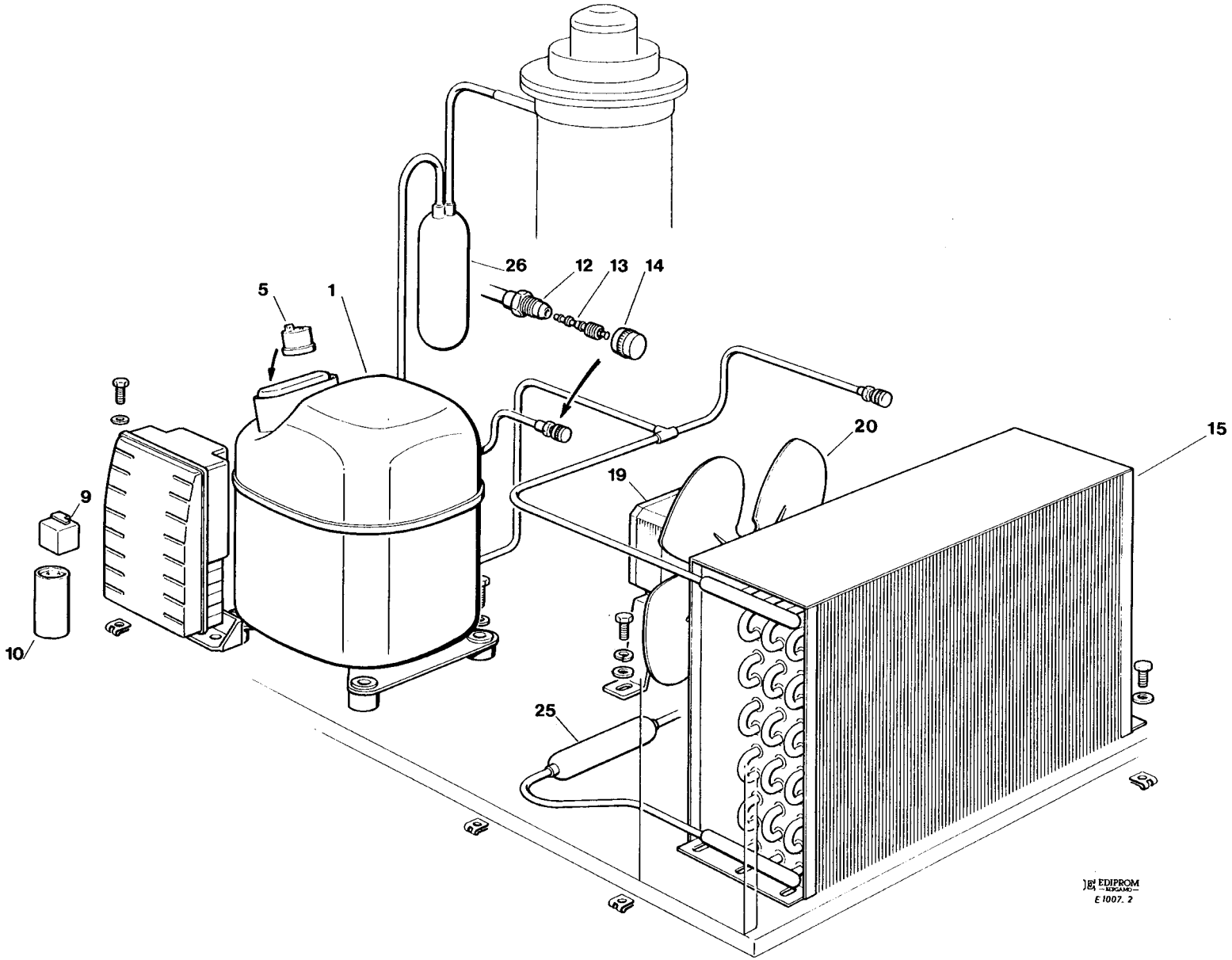
26
12
13
14
5
1
20
15
19
9
10
25
EDIPROM
E 1007. 2

SP 125 - SP 255 - REFRIGERANT SYSTEM AIR COOLED - SISTEMA REFRIGERANTE RAFFR. AD ARIA
CIRCUIT FRIGORIFIQUE REFROID. PAR AIR - LUFTGEKÜHLT GEFRIERSYSTEM

ITEM NO POS NO REP. NO REF. NO	PART NO - CODICE REFERENCE - STUECK NR **SP 125**	**SP 255**	DESCRIPTION	DESCRIZIONE	DESIGNATION	BESCHREIBUNG
1	670100 01 *****	670099 02 670101 03	COMPRESSOR ASSY - R 134 A COMPRESSOR ASSY - R 404 A	ASSIEME COMPRESSORE - R 134 A ASSIEME COMPRESSORE - R 404 A	ENSAMBLE COMPRESSEUR - R 134 A ENSAMBLE COMPRESSEUR - R 404 A	KOMPRESSOR - R 134 A KOMPRESSOR - R 404 A
5	620058 67 *****	620058 39 620058 51	PROTECTOR - R 134 A PROTECTOR - R 404 A	PROTETTORE - R 134 A PROTETTORE - R 404 A	PROTECTEUR - R 134 A PROTECTEUR - R 404 A	SCHUTZGERÄT - R 134 A SCHUTZGERÄT - R 404 A
9	620057 56 *****	620057 44 620168 22	START RELAY - R 134 A START RELAY - R 404 A	RELE DI AVVIAMENTO - R 134 A RELE DI AVVIAMENTO - R 404 A	RELAIS DE DEMARRAGE - R 134 A RELAIS DE DEMARRAGE - R 404 A	RELAIS - R 134 A RELAIS - R 404 A
10	620167 29	620167 01	START CAPACITOR	CAPACITA D'AVVIAMENTO	CAPACITÉ DE DEMARRAGE	START KONDENSATOR
12	650109 00	650109 00	VALVE BODY	CORPO VALVOLA	CORPS DE VANNE	VENTILGEHAUSE
13	670012 00	670012 00	VALVE PISTON	PISTONCINO VALVOLA	PISTON	VENTILKOLBEN
14	650106 00	650106 00	VALVE CAP	CAPPUCCIO VALVOLA	CAPUCHON DE VANNE	VENTILKLAPPE
15	620439 00	620405 00	AIR COOLED CONDENSER	CONDENSATORE AD ARIA	CONDENSEUR A AIR	LUFTGEKUEHLT KONDENSATOR
19	620419 02	620419 02	FAN MOTOR	MOTORE VENTILATORE	MOTEUR VENTILATEUR	LUFTER MOTOR
20	620419 33	620419 33	FAN BLADE	VENTOLA	HELICE	FLUEGEL
25	630003 05	630003 03	DRIER	FILTRO DEUMIDIFICATORE	FILTRE DESHYDRATEUR	TROCKNER
26	784464 05	784464 01	SUCTION LINE/ACCUMULATOR	ACCUMUL. E LINEA ASPIRAZIONE	ENS. ASPIRATION/ACCUMULATEUR	SAMMLER UND SAUGLEITUNGEN

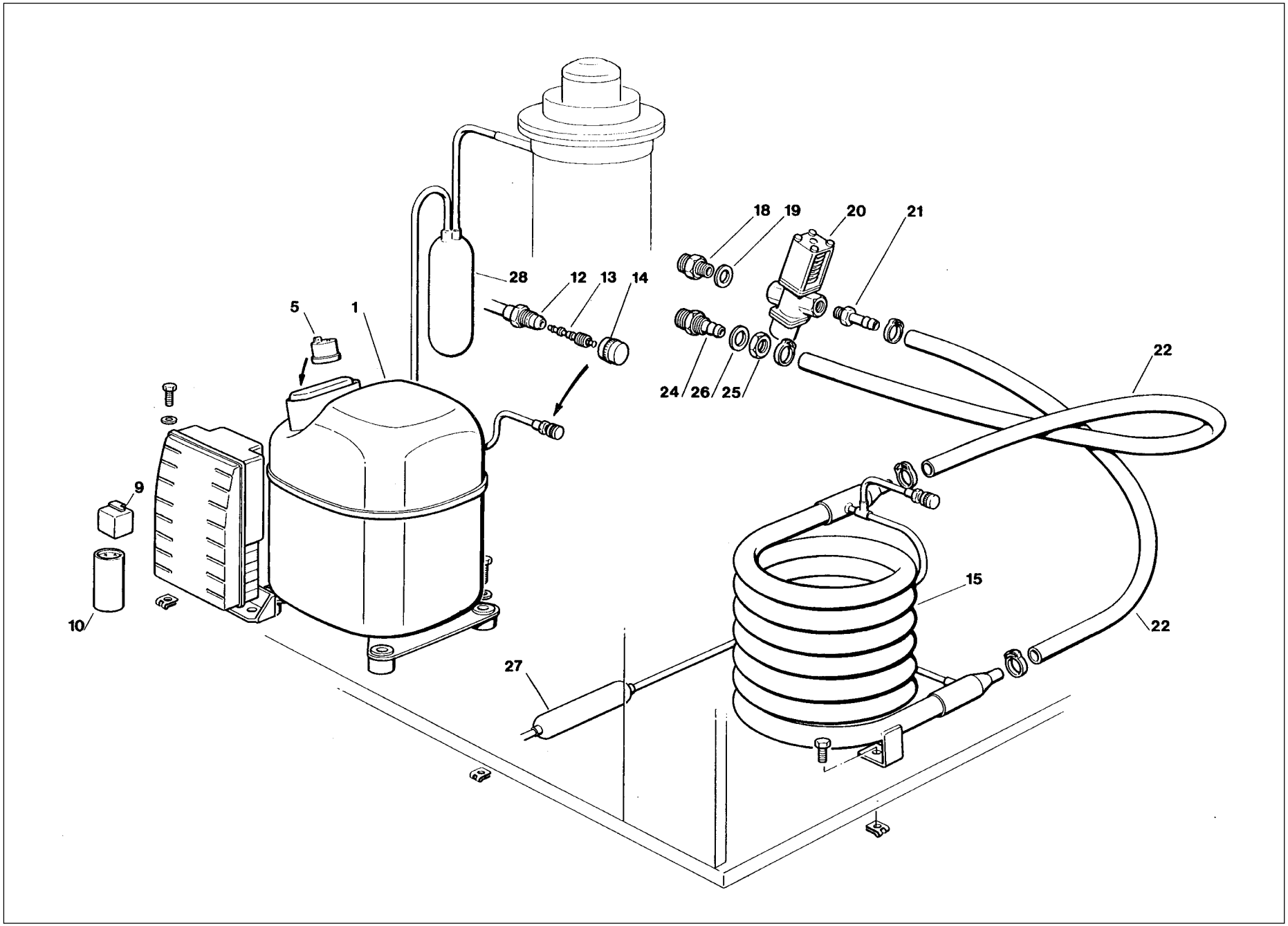
18
19
20
21
28
12
13
14
5
1
24
26
25
22
9
10
15
22
27

SP 125 - SP 255 - REFRIGERANT SYSTEM WATER COOLED - SISTEMA REFRIGERANTE RAFFR. AD ACQUA
CIRCUIT FRIGORIFIQUE REFROID. PAR EAU - WASSERGEKÜHLT GEFRIERSYSTEM

ITEM NO POS NO REP. NO REF. NO	PART NO - CODICE REFERENCE - STUECK NR **SP 125**	**SP 255**	DESCRIPTION	DESCRIZIONE	DESIGNATION	BESCHREIBUNG
1	670100 01 *****	670099 02 670101 03	COMPRESSOR ASSY - R 134 A COMPRESSOR ASSY - R 404 A	ASSIEME COMPRESSORE - R 134 A ASSIEME COMPRESSORE - R 404 A	ENSAMBLE COMPRESSEUR - R 134 A ENSAMBLE COMPRESSEUR - R 404 A	KOMPRESSOR - R 134 A KOMPRESSOR - R 404 A
5	620058 67 *****	620058 39 620058 51	PROTECTOR - R 134 A PROTECTOR - R 404 A	PROTETTORE - R 134 A PROTETTORE - R 404 A	PROTECTEUR - R 134 A PROTECTEUR - R 404 A	SCHUTZGERÄT - R 134 A SCHUTZGERÄT - R 404 A
9	620057 56 *****	620057 44 620168 22	START RELAY - R 134 A START RELAY - R 404 A	RELE DI AVVIAMENTO - R 134 A RELE DI AVVIAMENTO - R 404 A	RELAIS DE DEMARRAGE - R 134 A RELAIS DE DEMARRAGE - R 404 A	RELAIS - R 134 A RELAIS - R 404 A
10	620167 29	620167 01	START CAPACITOR	CAPACITA D'AVVIAMENTO	CAPACITÉ DE DEMARRAGE	START KONDENSATOR
12	650109 00	650109 00	VALVE BODY	CORPO VALVOLA	CORPS DE VANNE	VENTILGEHAUSE
13	670012 00	670012 00	VALVE PISTON	PISTONCINO VALVOLA	PISTON	VENTILKOLBEN
14	650106 00	650106 00	VALVE CAP	CAPPUCCIO VALVOLA	CAPUCHON DE VANNE	VENTILKLAPPE
15	620389 00	620389 00	WATER COOLED CONDENSER	CONDENSATORE AD ACQUA	CONDENSEUR A EAU	WASSERGEKUEHLT KONDENSATOR
18	733204 00	733204 00	WATER INLET FITTING	RACCORDO INGRESSO ACQUA	RACCORD ARRIVÉE D'EAU	WASSEREINLAUFSTÜCK
19	400031 01	400031 01	FIBER WASHER	RONDELLA IN FIBRA	RONDELLE EN FIBRE	FIBER SCHEIBE
20	620111 00	620111 00	WATER REGULATING VALVE	VALVOLA PRESSOSTATICA	VANNE A EAU PRESSOSTATIQUE	WASSERREGLERVENTIL
21	733173 00	733173 00	OUTLET VALVE FITTING	RACCORDO USCITA VALVOLA PRESS.	RACCORD SORTIE VALVE PRESS.	WASSERREGLEREABFLUSSTUECK
22	281900 03	281900 03	PLASTIC TUBE-PER METER	TUBO IN PLASTICA-PER METRO	TUYAU EN PLASTIQUE-POUR METRE	PLASTIK ROHR-PRO METER
24	733174 00	733174 00	WATER DRAIN FITTING	RACCORDO SCARICO ACQUA	RACCORD ÉVACUATION EAU	WASSERABFLUSSCHLAUCH
25	400076 00	400076 00	NUT	DADO	ECROU	MUTTER
26	400031 00	400031 00	FIBER WASHER	RONDELLA IN FIBRA	RONDELLE EN FIBRE	FIBER SCHEIBE
27	630003 05	630003 03	DRIER	FILTRO DEUMIDIFICATORE	FILTRE DESHYDRATEUR	TROCKNER
28	784464 05	784464 01	SUCTION LINE/ACCUMULATOR	ACCUMUL. E LINEA ASPIRAZIONE	ENS. ASPIRATION/ACCUMULATEUR	SAMMLER LEITUNGEN

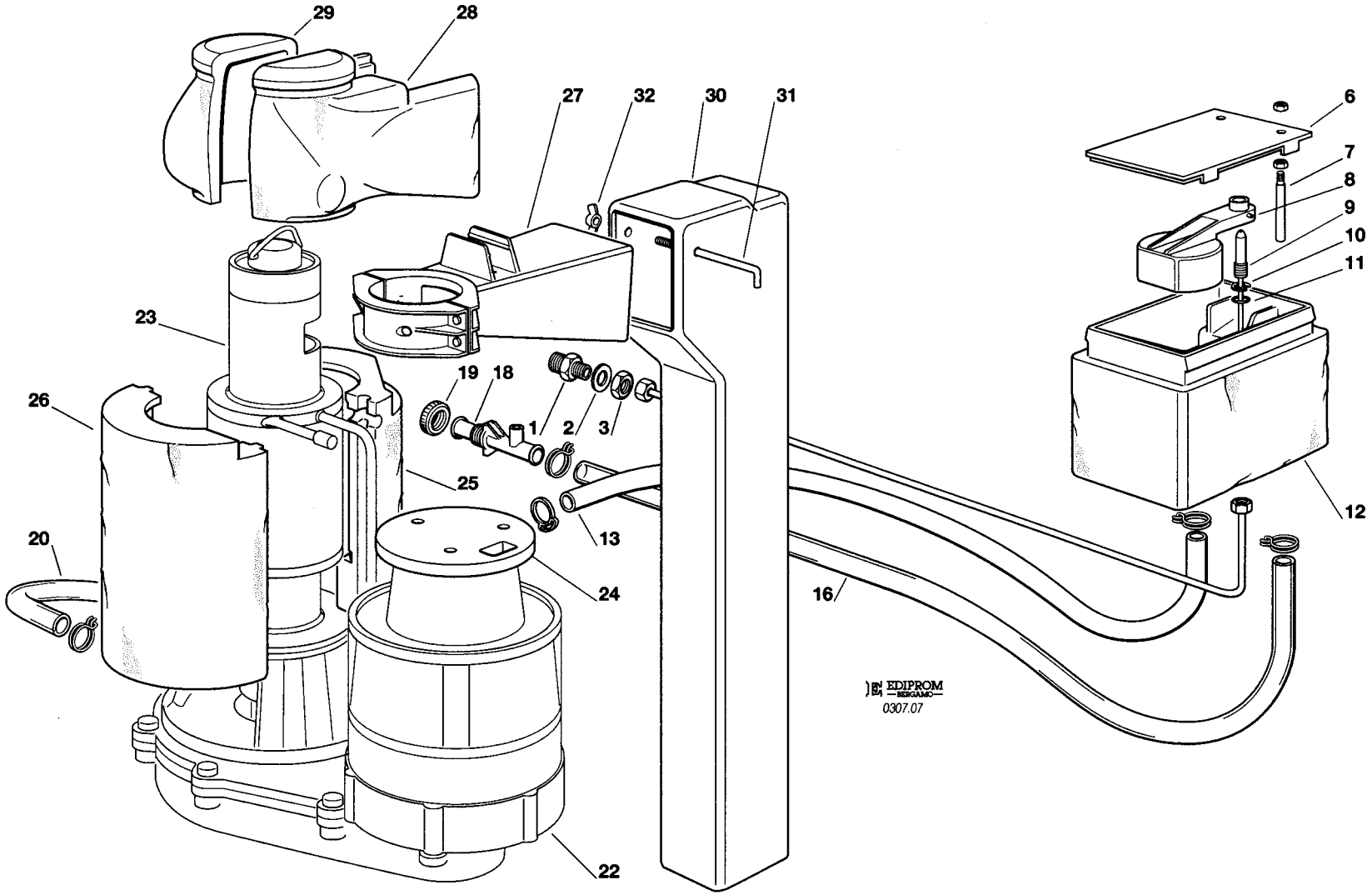
29
28
27
32
30
31
6
7
8
9
10
11
23
19
18
1
2
3
26
25
12
20
13
24
16
22
EDIPROM
BERGAMO
0307.07

SP 125 - SP 255 - WATER SYSTEM AND INSULATIONS - CIRCUITO IDRAULICO ED ISOLAMENTI
CIRCUIT HYDRAULIQUE ET ISOLATIONS - WASSERKREISLAUF UND ISOLIERUNGEN

ITEM NO POS NO REP. NO REF. NO	PART NO - CODICE REFERENCE - STUECK NR **SP 125**	**SP 255**	DESCRIPTION	DESCRIZIONE	DESIGNATION	BESCHREIBUNG
1	733205 00	733205 00	WATER INLET FITTING	RACCORDO INGRESSO ACQUA	RACCORD ARRIVEE D'EAU	WASSEREINLAUFSTUECK
2	400031 00	400031 00	FIBER WASHER	RONDELLA IN FIBRA	RONDELLE EN FIBRE	FIBER SCHEIBE
3	400030 01	400030 01	NUT	DADO	ECROU	MUTTER
6	660363 00	660363 00	WATER RESERVOIR COVER	COPERCHIO VACHETTA	COUVERCLE	BECKENABDECKUNG
7	724215 06	724215 06	WATER LEVEL METAL PIN	PERNO SENSORE LIVELLO ACQUA	DETECTEUR NIVEAU EAU	FÜHLERSTIFT-WASSERNIVEAU
8	783153 00R	783153 00R	NOZZLE	UGELLO	GICLEUR	VENTILSDUESE
9	660585 00	650585 00	FLOAT VALVE ASSY	ASS. GALLEGGIANTE	ENS. VANNE A FLOTTEUR	SCHWIMMERVENTIL-EINHEIT
10	460038 02	460038 02	CLIP RING	ANELLO SEEGER	CIRCLIP	RING
11	640100 00	640100 00	O RING	GUARNIZIONE OR	JOINT TORIQUE	SIMMERING
12	793126 01	793126 01	WATER RESERVOIR ASSY	ASS. VASCHETTA GALLEGGIANTE	ENS. RÉSERVOIR	BECKEN/SCHWIMMERVENTILEINHEIT
13	281822 00	281822 00	PLASTIC TUBE - PER MTR	TUBO IN PLASTICA - PER METRO	TUYAU EN PLASTIQUE - POUR METRE	PLASTIK ROHR - PRO METER
16	281832 00	281832 00	PLASTIC TUBE - PER MTR	TUBO IN PLASTICA - PER METRO	TUYAU EN PLASTIQUE - POUR METRE	PLASTIK ROHR - PRO METER
18	660224 00	660224 00	WATER DRAIN FITTING	RACCORDO SCARICO ACQUA	RACCORD EVACUATION EAU	WASSERABFLUSSANSCHLUSSE
19	660535 00	660535 00	PLASTIC RING NUT	GHIERA IN PLASTICA	COLLIER DE SERRAGE EN PLASTIQUE	PLASTIKRINGMUTTER
20	610163 02	610163 02	PLASTIC TUBE	TUBO IN PLASTICA	TUYAU EN PLASTIQUE	PLASTIK ROHR
22	794225 13 R	794225 13 R	GEAR REDUCER ASSY	ASS. MOTORIDUTTORE	ENS .MOTOREDUCTEUR	GETRIEBEMOTOR-EINHEIT
23	794236 07R	794237 05 R	FREEZER ASSY	ASSIEME FREEZER	ENS. FREEZER	GEFRIERZYLINDEREINHEIT
24	650515 02	650515 02	GEAR MOTOR PLASTIC COVER	PROTEZIONE MOTORE	PROTECTION MOTEUR	PLASTIK MOTORSCHUTZ
25-26	060551 03	060551 04	INSULATION	ISOLAMENTO	ISOLATION	GEFRIERZYLINDERISOLIERUNG
27	660676 03	660676 03	S.S. ICE SPOUT	BOCCHETTA SCARICO GHIACCIO	BEC VERSEUR	AUSWURFSCHNAUZE
28-29	060551 00	060551 00	SPOUT INSULATION	ISOLAMENTO BOCC.	ISOLATION BEC VERSEUR	AUSWURFSCHNAUZEISOLIERUNG
30	660455 15	660455 15	PLASTIC ICE CHUTE	CONDOTTO SCARICO GHIACCIO	GOULOTTE	EIS BUNKERAUSLAUF
31	724180 02	724180 02	METAL ROD	TIRANTE	TIRANT	STANGE
32	430083 00	430083 00	WING NUT	DADO AD ALETTE	ECROU	MUTTER

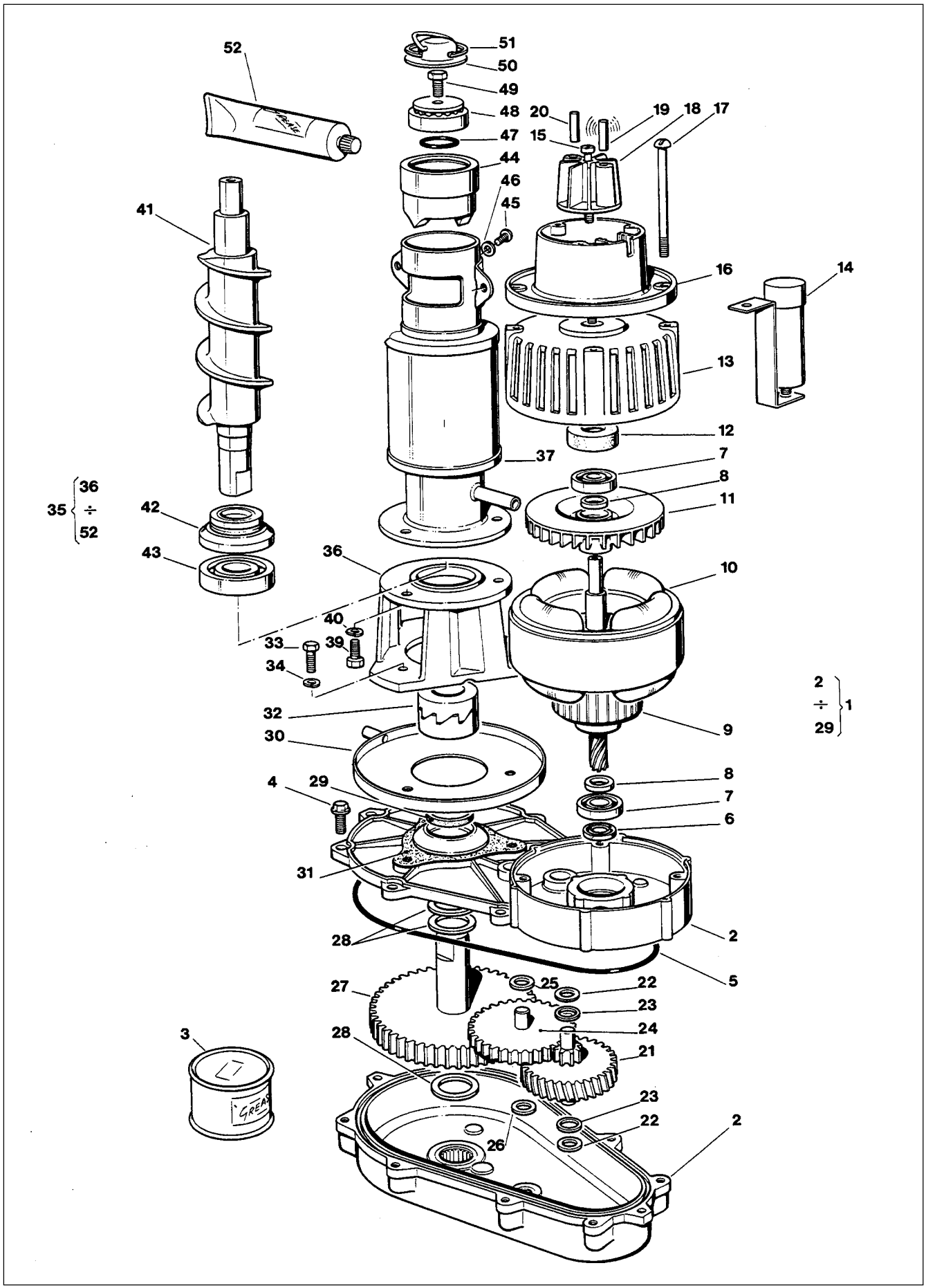
52
51
50
49
48
47
44
46
45
41
20
19
18
17
15
16
14
13
12
37
7
8
11
35 ÷ 36 52
42
43
36
10
40
33
39
34
32
30
9
2 ÷ 29 1
4
29
8
7
6
31
2
28
5
27
25
22
23
24
21
3
28
23
22
26
2

SP125 - SP 255 - FREEZER AND GEAR REDUCER ASSY - ASSIEME FREEZER E RIDUTTORE
ENS. FREEZER ET MOTOREDUCTEUR - GEFRIERZYLINDER UND GETRIEBEEINHEIT

ITEM NO POS NO REP. NO REF. NO	PART NO - CODICE REFERENCE - STUECK NR **SP 125**	**SP 255**	DESCRIPTION	DESCRIZIONE	DESIGNATION	BESCHREIBUNG
1	794225 13 R	794225 13 R	GEAR REDUCER ASSY	ASS. RIDUTTORE	ENS. MOTOREDUCTEUR	GETRIEBEMOTOR CPL
2	001015 01	001015 01	GEAR CASE ASSY	ASS. SCATOLA INGRANAGGI	ENS. CARTER RÉDUCTEUR	GETRIEBEGEHAUSE CPL
3	060294 01	060294 01	GREASE (1 KG)	GRASSO (1 KG)	GRAISSE (1 KG)	FETT (1 KG)
4	03001251 00	03001251 00	SCREW	VITE	VIS	SCHRAUBE
5	640084 00		O RING	GUARNIZIONE OR	JOINT TORIQUE	O RING
6	640083 00		GEASE SEAL	PARAOLIO	PARAHUILE	SCHMIERDICHTUNG
7	651056 00	651056 00	BEARING	CUSCINETTO	ROULEMENT	LAGER
8	441800 09	441800 09	TRUST WASHER	RONDELLA DI RASAMENTO	RONDELLE.	UNTERLEG SCHEIBE
9	794123 03 R	794123 03 R	ROTOR ASSY	ASS. ROTORE	ENS. ROTOR	ROTOR EINHEIT
10	620394 00	620394 00	STATOR ASSY	ASS. STATORE	ENS. STATOR	STATOREINHEIT
11	764001 01	764001 01	FAN BLADE	VENTOLA	HELICE	FLÜGEL/RAD
12	640095 00	640095 00	RUBBER INSERT	INSERTO IN GOMMA	BAGUE CAOUTCHOUC	GUMMI LAGER GEHAUSE
13	794226 01R	794226 01R	DRIVE MOTOR COVER	COPERCHIO MOTORE	COUVERCLE MOTEUR	MOTOR DEKEL
14	620292 04	620292 04	CAPACITOR	CONDENSATORE	CONDENSATEUR	KONDENSATOR
15	03001403 77	03001403 77	SCREW	VITE	VIS	SCHAUBE
16	650515 01	650515 01	PLASTIC HOUSING	ALLOGGIAMENTO IN PLASTICA	BôITE DETECTEUR EFF. HALL	KUNSTSTOFFGEHAUSE
17	423872 02	423872 02	SCREW	VITE	VIS	SCHRAUBE
18-19-20	784476 00	784476 00	MAGNETO ASSY	ASS. SUPPORTO MAGNETE	ENS. SUPPORT DU MAGNETO	MAGNETHALTER CPL
21	651160 00	651160 00	1SR GEAR & PINION	INGRANAGGIO IN FIBRA	ENGRANAGE EN CELERON	1 GETRIEBERAND & RITZEL
22	441800 06		TRUST WASHER	RONDELLA DI RASAMENTO	RONDELLE.	UNTERLEG SCHEIBE
23	441800 05		TRUST WASHER	RONDELLA DI RASAMENTO	RONDELLE	UNTERLEG SCHEIBE
24	651161 00	651161 00	2ND GEAR & PINION	INGRANAGGIO INTERMEDIO	2eme ENGRANAGE ET PIGNON	2 GETRIEBERAND & RITZEL
25	441800 08		TRUST WASHER	RONDELLA DI RASAMENTO	RONDELLE	UNTERLEG SCHEIBE
26	441800 07		TRUST WASHER	RONDELLA DI RASAMENTO	RONDELLE	UNTERLEG SCHEIBE
27	651162 01	651162 01	OUTPUT GEAR & SHAFT	INGRANAGGIO FINALE	PIGNON-ENGR. D'ENTRAINEMENT	GETRIEBERAD & AUSGANGSTIFT
28	441808 00		TRUST WASHER	RONDELLA DI RASAMENTO	RONDELLE	SCHEIBE
29	640019 01	640019 01	GREASE SEAL	PARAOLIO	PARAHUILE	SCHMIERDICHTUNG
30	660756 00	660756 00	DRIP TRAY	RACCOGLIGOCCE	GOUPELLE EAU	TROPFPFANNE
31	640060 00	640060 00	GASKET	GUARNIZIONE	JOINT	DICHTUNG
32	060359 00	060359 00	COUPLING	GIUNTO	BAGUE D'ACCOUPLEMENT CPL	KUPPLUNG
33	03001251 01	03001251 01	SCREW	VITE	VIS	SCHAUBE
34	440015 04	440015 04	WASHER	RONDELLA	RONDELLE	SCHEIBE
35	794236 07 R	794237 05 R	FREEZER ASSY	ASSIEME FREEZER	ENS. FREEZER	GEFRIERZYLINDEREINHEIT
36	764010 00	764010 00	ALUMINIUM ADAPTER	SUPPORTO DI ALLUMINIO	SUPPORT	PASSTUECK
37	784260 09	784261 07	WORM TUBE ONLY	TUBO EVAPORATORE	CYLINDRE EVAPORATEUR	GEFRIERZYLINDER
39	421591 00		SCREW	VITE	VIS	SCHRAUBE
40	440015 04	440015 04	WASHER	RONDELLA	RONDELLE	SCHEIBE
41	724052 07	724052 06	AUGER	COCLEA	VIS SANS FIN	SCHNECKE
42	640040 00	640040 00	WATER SEAL	ASSIEME PREMISTOPPA	GARNITURE D'ETANCHEITE	WASSERDICHTUNGEINHEIT
43	670011 01	670011 01	LO BEARING	CUSCINETTO INFERIORE	PALIER INFERIEUR	UNTERESLAGER
44	754001 02	754001 02	ICE BREAKER ONLY	ROMPIGHIACCIO	BROYEUR	EISBRECHER
45	420000 26	420000 26	SCREW	VITE	VIS	SCHRAUBE
46	440015 05	440015 05	WASHER	RONDELLA	RONDELLE	SCHEIBE
47	640041 01	640041 01	O RING	GUARNIZIONE OR	JOINT TORIQUE	O RING
48	670041 00	670041 00	TOP BEARING	CUSCINETTO SUPERIORE	PALIER SUPERIEUR	OBERESLAGER
49	420030 00	420030 00	SCREW	VITE	VIS	SCHAUBE
50	734105 00		CAP	CALOTTA	CALOTTE	KUGELHAUBE
51	650297 00	650297 00	CLIP RING	ANELLO SEEGER	CIRCLIP	RING
52	263612 00	263612 00	WATER PROOF GREASE	GRASSO IDROREPELL.	GRAISSE	FETT

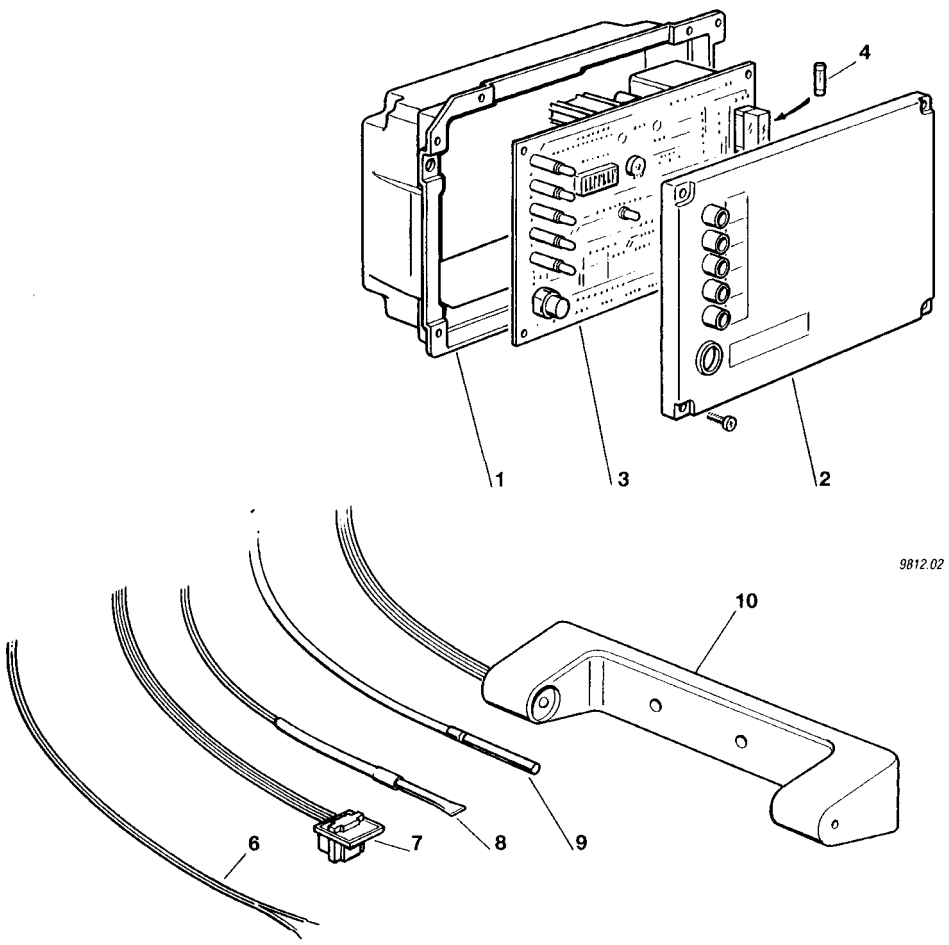
4
1
3
2
9812.02
10
6
7
8
9

SP 125 - SP 255 - P.C. BOARD AND SENSOR ASSY - SCHEDA ELETTRONICA E SENSORI - ENS. CARTE ELECTRINIQUE ET DETECTEURS ELEKTRONISCHE KARTE UND TEMPERATURFUEHLERENHEIT

ITEM NO POS NO REP. NO REF. NO	PART NO CODICE REFERENCE STUECK NR	DESCRIPTION	DESCRIZIONE	DESIGNATION	BESCHREIBUNG
1-2-3	620462 02	P.C. BOARD ASSY	ASSIEME SCHEDA ELETTRONICA	ENSAMBLE CARTE ELECTRONIQUE	GEDRUCKTESCHALTUNG
4	630015 09 630015 10	FUSE (100 mA) FUSE (16 A)	FUSIBILE (100 mA) FUSIBILE (16 A)	FUSIBLE (100 mA) FUSIBLE (16 A)	SCHMELZSICHERUNG (100 mA) SCHMELZSICHERUNG (16 A)
6	620404 13	WATER LEVEL SENSOR	SENSORE LIVELLO ACQUA	CAPTEUR NIVEAU EAU	WASSERNIVEAUFÜHLER
7	620404 03	HALL EFFECT SENSOR	SENSORE EFFETTO HALL	CAPTEUR EFFECT HALL	HALL EFFEKT-FÜHLER
8	620404 11	CONDENSER TEMP. SENSOR	SENSORE TEMP. CONDENSATORE	CAPTEUR TEMP. CONDENSEUR	KONDENSATORTEMPERATURFUEHLER
9	620404 10	EVAPORATOR TEMP. SENSOR	SENSORE TEMP. EVAPORATORE	CAPTEUR TEMP. ÉVAPORATEUR	VERDAMPFERTEMPERATURFUEHLER
10	650674 02	ICE LEVEL CONTROL ASSY	ASS. CONTR. LIVELLO GHIACCIO	ENS. DETECTEUR NIVEAU GLACE	EISNIVEAUFUEHLEREINHEIT

COMPRESSOR CHART - TABELLA COMPRESSORI - TABLEAU COMPRESSEUR - KOMPRESSOR KARTE

MODEL MODELLO MODELE MODELL	VOLTS TENSIONE TENSION SPANNUNG	COMPRESSOR MODEL MOD. COMPRESSORE TYPE COMPRESSEUR KOMPRESSOR TYP	COMPRESSOR COMPRESSORE COMPRESSEUR KOMPRESSOR	RELAY RELÉ RELAIS RELAIS	PROTECTOR PROTETTORE PROTECTEUR SCHUTZGERAT	START CAPACITOR CAPACITÁ D'AVV. CAPACITÉ DE DEMARRAGE START KONDENSATOR	RUN CAPACITOR CAPACITA' DI MARCIA CAPACITÉ PERMANENCE BETRIEB KONDENSATOR
SP 125	230/60/1						
SP 255	230/60/1	U.H. CAE 9470 Z	670101 04	620168 25	620058 04	620167 30	620167 21
SP 125	230/50/1	ELECTROLUX GP 14 TB	670100 01	620057 56	620058 67	620167 29	–
SP 255 - R134A	230/50/1	U.H. CAJ 4461 Y	670099 02	620057 44	620058 39	620167 01	–
SP 255 - R404A	230/50/1	U.H. CAE 9470 Z	670101 03	620168 22	620058 54	620167 01	620167 21

ELECTRIC COMPONENTS CHART - TABELLA COMPONENTI ELETTRICI - TABLEAU COMPOSANTS ELECTRIQUE - ELEKTRISCHEKARTE

MODEL MODELLO MODELE MODELL	VOLTS TENSIONE TENSION SPANNUNG	GEAR MOTOR ASSY ASSIEME MOTORIDUTTORE ENS. MOTOREDUCTEUR GETRIEBEMOTOREINHEIT	FAN MOTOR ONLY MOTORE VENTILATORE MOTEUR VENTILATEUR LUFTER MOTOR	DRIVE MOTOR CAPACITOR CAPACITA' MOTORE RIDUTT. CONDENSATEUR MOTEUR REDUCT. KONDENSATOR	P.C. BOARD SCHEDA ELETTRONICA CARTE ELECTRONIQUE ELEKTRONISCHE KARTE	
SP 125	230/60/1	794225 13 R	620419 02	620292 04	620462 02	
SP 255	230/60/1	794225 13 R	620419 02	620292 04	620462 02	
SP 125	230/50/1	794225 13 R	620419 02	620292 04	620462 02	
SP 255	230/50/1	794225 13 R	620419 02	620292 04	620462 02	