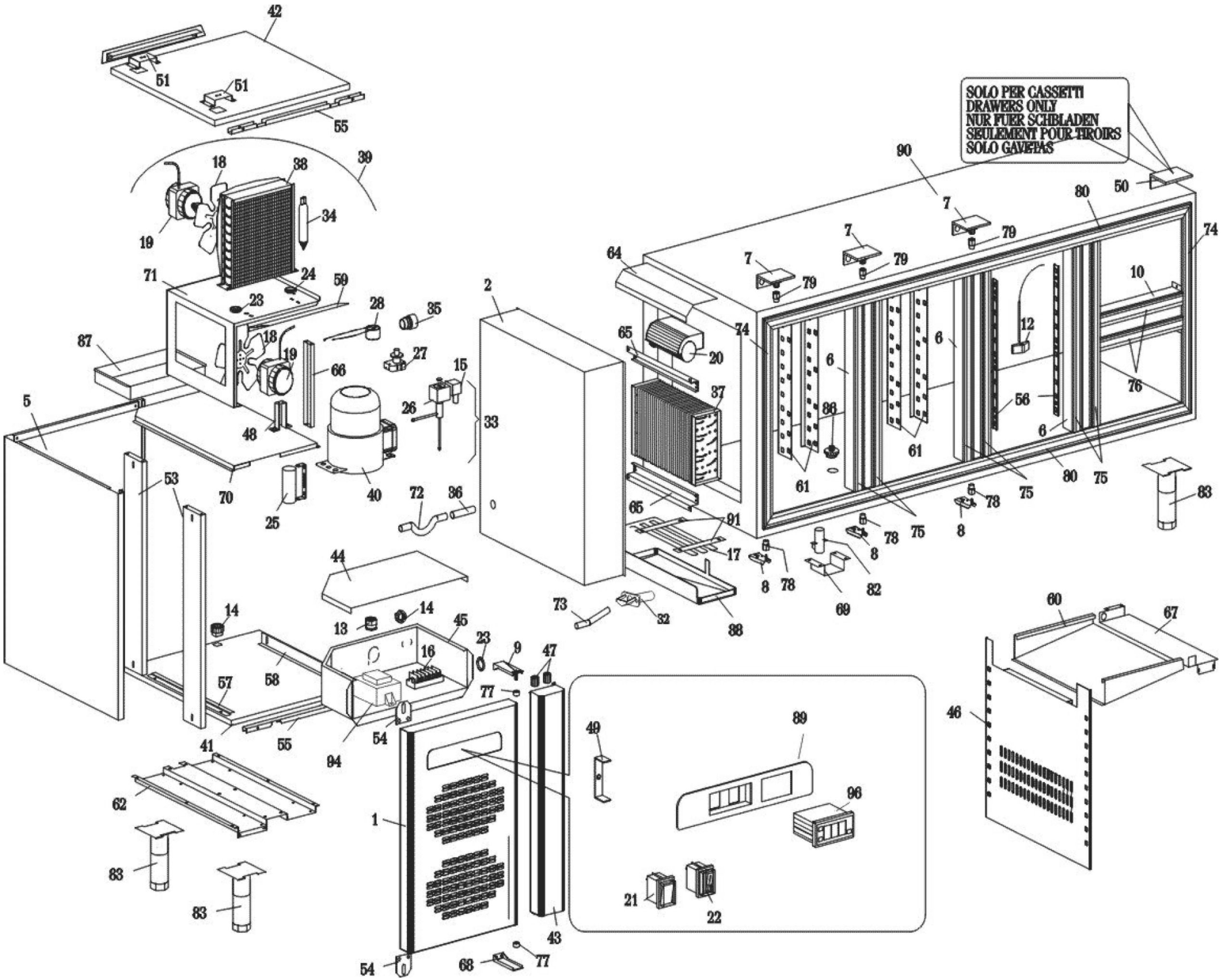
SOLO PER CASSETTI
DRAWERS ONLY
NUR FUER SCHBLADEN
SEULEMENT POUR TIROIRS
SOLO GAVETAS

# Modello Typ Model Modele Modelo

| | | TM1A<br>TM1A/X<br>TM1A/A | TM1A/2<br>TM1A/2X<br>TM1A/2A | TM1A/11<br>TM1A/11X<br>TM1A/11A | TM1A/3<br>TM1A/3X<br>TM1A/3A | TM1B<br>TM1B/X<br>TM1B/A | TM1B/2<br>TM1B/2X<br>TM1B/2A | TM1B/4<br>TM1B/4X<br>TM1B/4A | TM1B/11<br>TM1B/11X<br>TM1B/11A | TM1B/22<br>TM1B/22X<br>TM1B/22A | TM1B/3<br>TM1B/3X<br>TM1B/3A |
|---|---|---|---|---|---|---|---|---|---|---|---|
| Num. Cassetti<br>Schublad<br>Drawers<br>Tiroirs<br>Gabetas | 1/2 | --- | 2 | --- | --- | --- | 2 | 4 | --- | --- | --- |
| | 1/3 | --- | --- | 1 | 3 | --- | --- | --- | 1 | 2 | 3 |
| | 2/3 | --- | --- | 1 | --- | --- | --- | --- | 1 | 2 | --- |

| | | TM1C<br>TM1C/X<br>TM1C/A | TM1C/2<br>TM1C/2X<br>TM1C/2A | TM1C/4<br>TM1C/4X<br>TM1C/4A | TM1C/6<br>TM1C/6X<br>TM1C/6A | TM1C/11<br>TM1C/11X<br>TM1C/11A | TM1C/22<br>TM1C/22X<br>TM1C/22A | TM1C/33<br>TM1C/33X<br>TM1C/33A | TM1C/3<br>TM1C/3X<br>TM1C/3A |
|---|---|---|---|---|---|---|---|---|---|
| Num. Cassetti<br>Schublad<br>Drawers<br>Tiroirs<br>Gabetas | 1/2 | --- | 2 | 4 | 6 | --- | --- | --- | --- |
| | 1/3 | --- | --- | --- | --- | 1 | 2 | 3 | 3 |
| | 2/3 | --- | --- | --- | --- | 1 | 2 | 3 | --- |

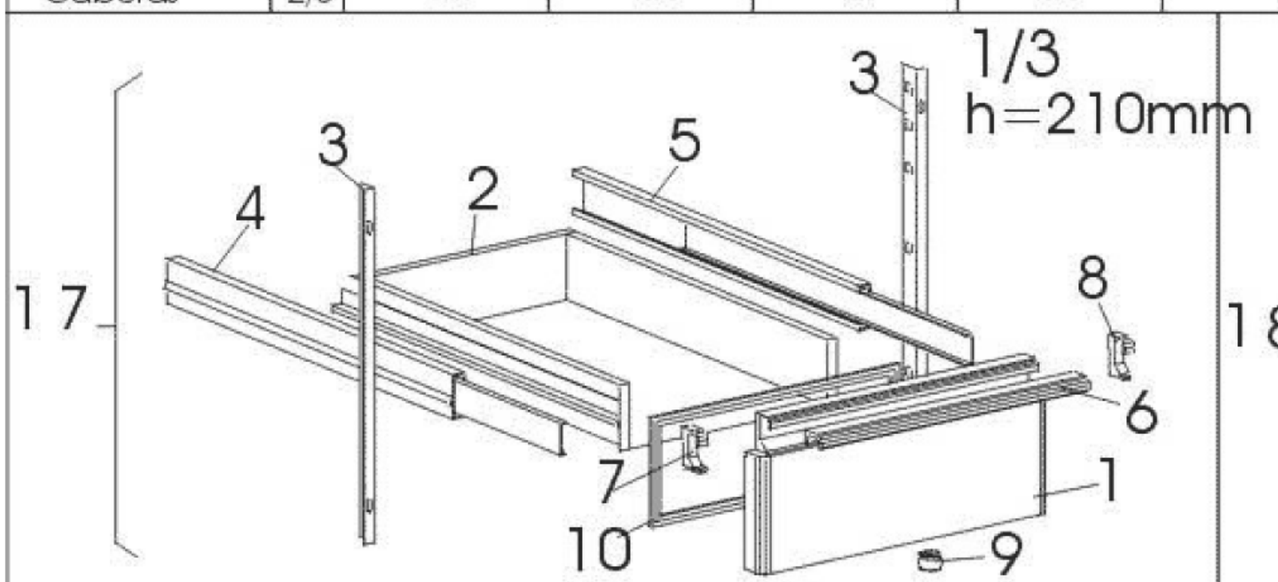


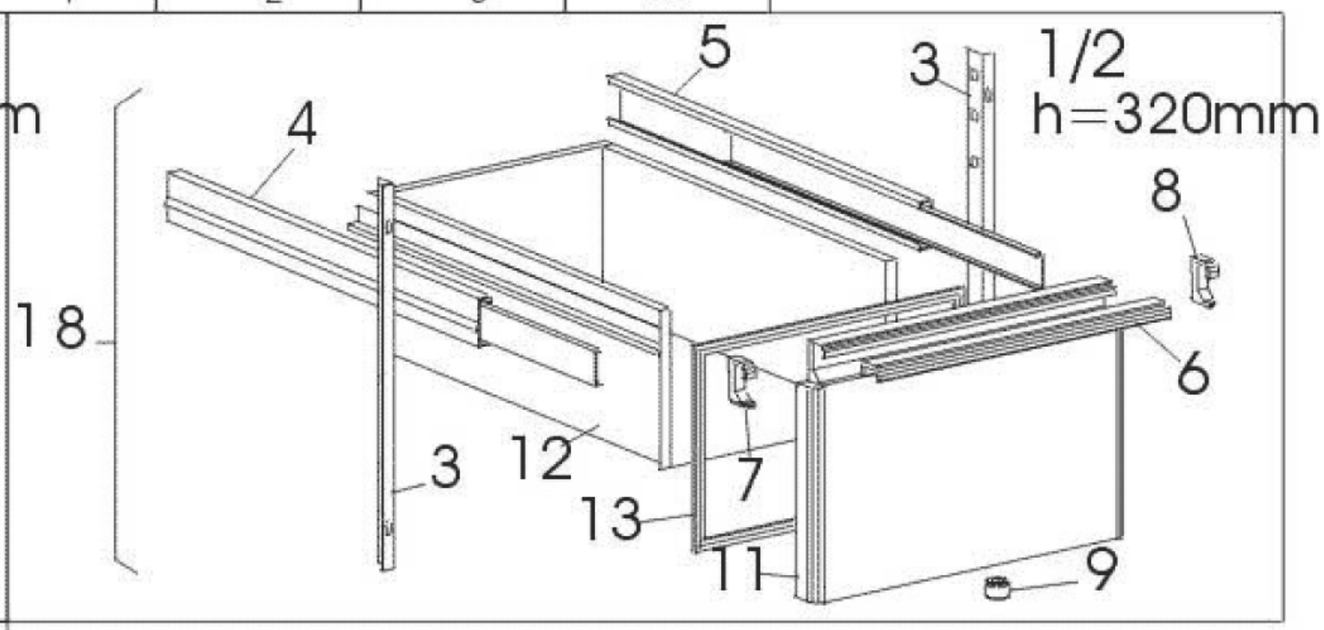


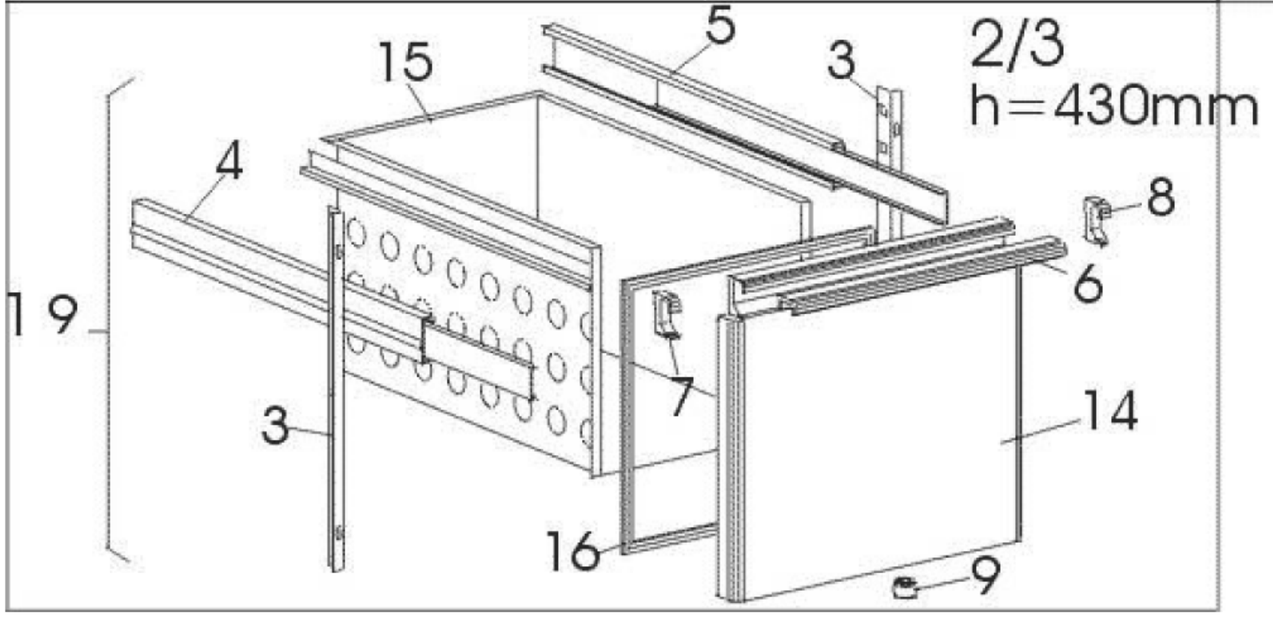

# Modello Typ Model Modele Modelo

| | | | | | | | | | | |
|---|---|---|---|---|---|---|---|---|---|---|
| | | TM1A<br>TM1A/X<br>TM1A/A | TM1A/2<br>TM1A/2X<br>TM1A/2A | TM1A/11<br>TM1A/11X<br>TM1A/11A | TM1A/3<br>TM1A/3X<br>TM1A/3A | TM1B<br>TM1B/X<br>TM1B/A | TM1B/2<br>TM1B/2X<br>TM1B/2A | TM1B/4<br>TM1B/4X<br>TM1B/4A | TM1B/11<br>TM1B/11X<br>TM1B/11A | TM1B/22<br>TM1B/22X<br>TM1B/22A |
| Porte<br>Ture<br>Doors<br>Portes<br>Portas | SX | 1 | 1 | 1 | 1 | 2 | 2 | 1 | 2 | 1 |
| Gabetas | DX | 1 | --- | --- | --- | 1 | --- | --- | --- | --- |
| | | TM1B/3<br>TM1B/3X<br>TM1B/3A | TM1C<br>TM1C/X<br>TM1C/A | TM1C/2<br>TM1C/2X<br>TM1C/2A | TM1C/4<br>TM1C/4X<br>TM1C/4A | TM1C/6<br>TM1C/6X<br>TM1C/6A | TM1C/11<br>TM1C/11X<br>TM1C/11A | TM1C/22<br>TM1C/22X<br>TM1C/22A | TM1C/33<br>TM1C/33X<br>TM1C/33A | TM1C/3<br>TM1C/3X<br>TM1C/3A |
| Porte<br>Ture<br>Doors<br>Portes<br>Portas | SX | 2 | 3 | 3 | 2 | 1 | 3 | 2 | 1 | 3 |
| Gabetas | DX | --- | 1 | --- | --- | --- | --- | --- | --- | --- |

