KROMO	TABLE KI5610	REV 02
BK4		

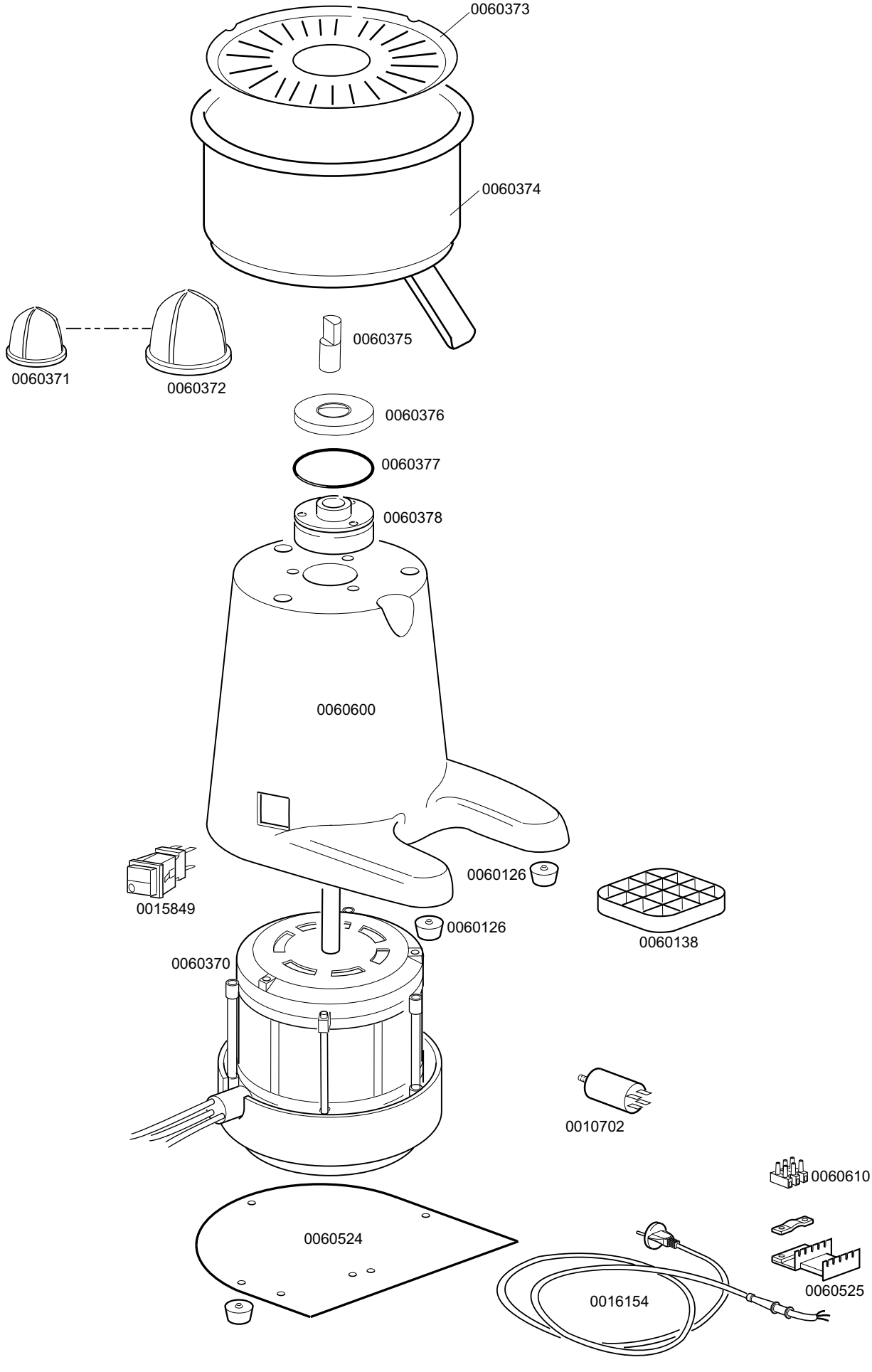

FRUIT JUICE SQUEEZER BK4

TABLE KI5610

CODE	DESCRIPTION	CODE	DESCRIPTION
0010702	5 Microfarad condenser		
0015849	Single switch green pilot lamp		
0016154	Power supply cable		
0060126	Rubber small foot		
0060138	Glasses holder		
0060370	Engine		
0060371	Small cone		
0060372	Big cone		
0060373	Stainless steel sieve		
0060374	Stainless steel small basing		
0060375	Cone shaft		
0060376	Support cover		
0060377	O-ring		
0060378	Container support		
0060524	Bottom protection		
0060525	Presscable		
0060600	Die-cast for work		
0060610	Terminal board		