SAGI - BASI REFRIGERATE
WM1A-2 - 11-04-2005 »

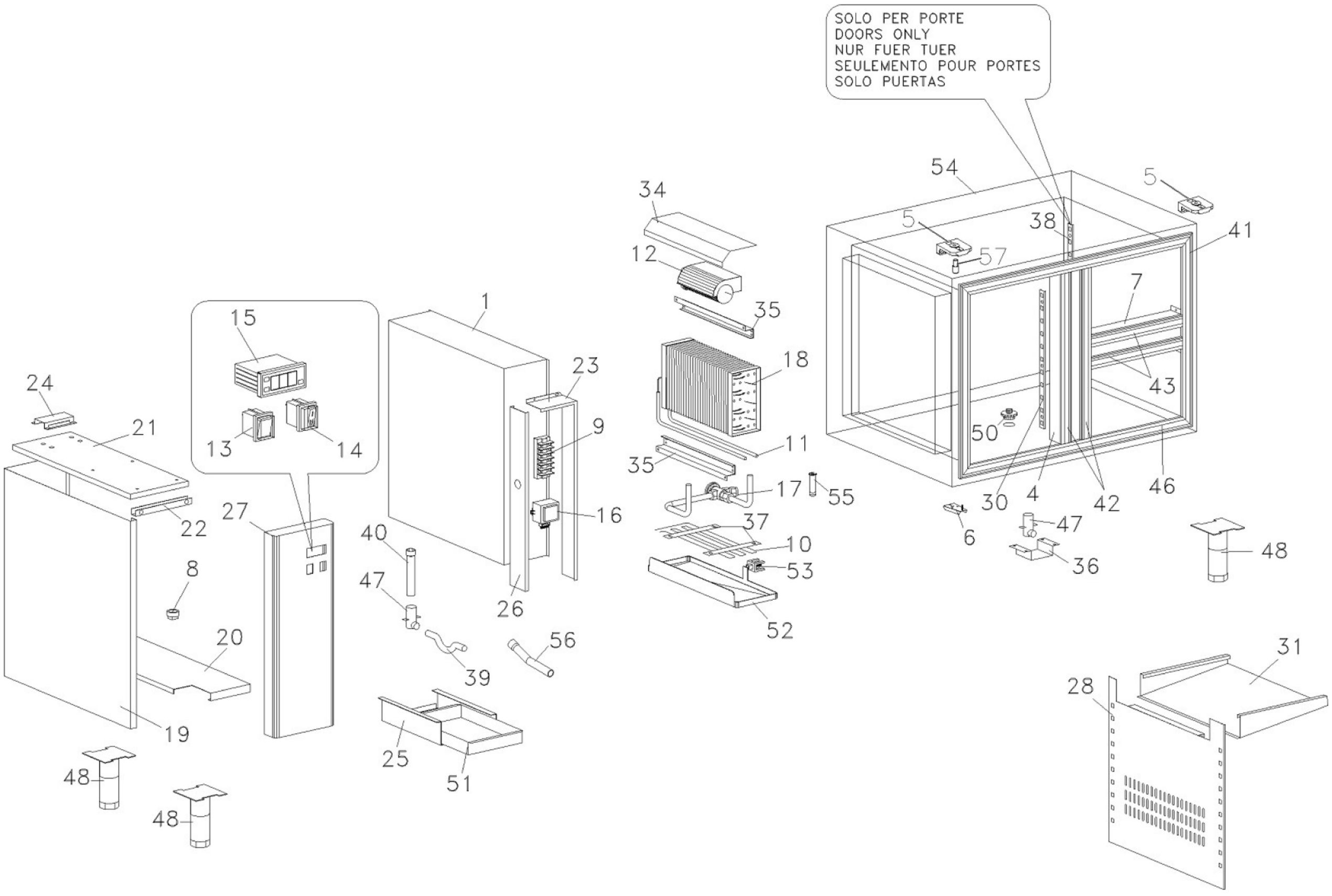

Modello Typ Model Modele Modelo

		WM1A WM1A/X WM1A/A	WM1A/2 WM1A/2X WM1A/2A	WM1B WM1B/X WM1B/A	WM1B/2 WM1B/2X WM1B/2A	WM1B/4 WM1B/4X WM1B/4A	WM1C WM1C/X WM1C/A	WM1C/2 WM1C/2X WM1C/2A	WM1C/4 WM1C/4X WM1C/4A	WM1C/6 WM1C/6X WM1C/6A
Num.cassetti Schublad Drawers Tiroirs Gabetas	1/2	-	2	-	2	4	-	2	4	6
	1/3	-	-	-	-	-	-	-	-	-
	2/3	-	-	-	-	-	-	-	-	-

1/2

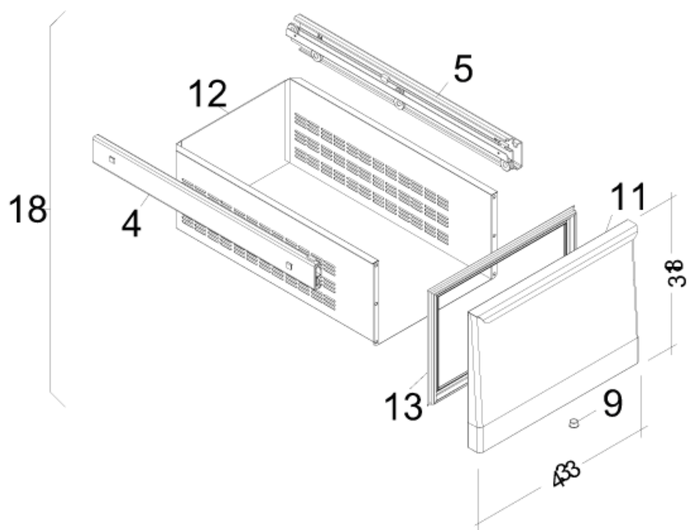

1/3

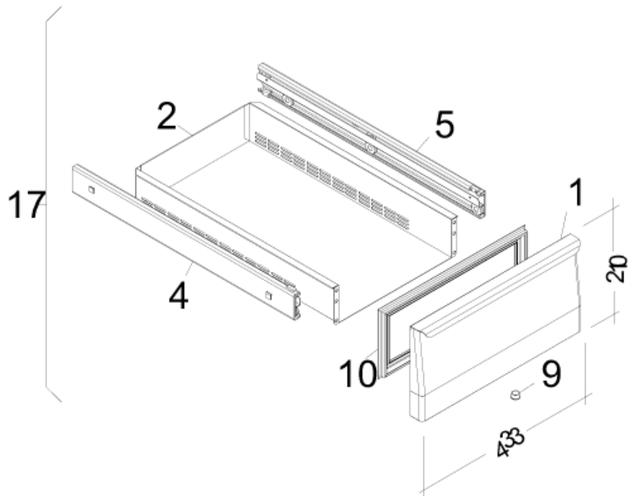

2/3

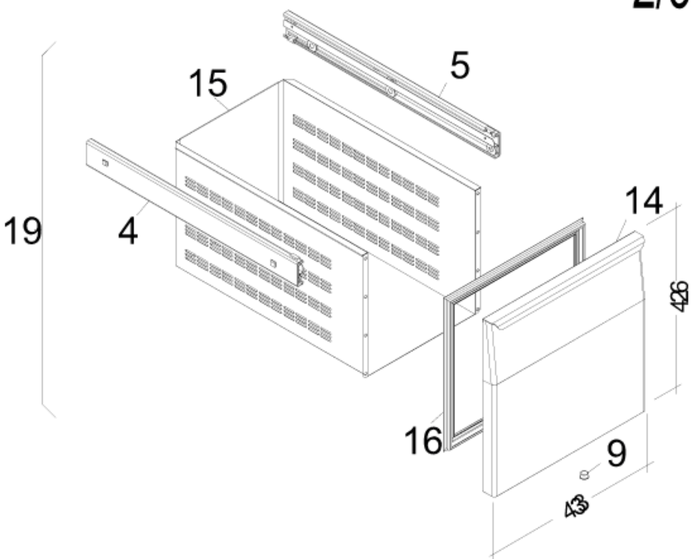

Modello Typ Model Modele Modelo

		WM1A WM1A/X WM1A/A	WM1A/2 WM1A/2X WM1A/2A	WM1B WM1B/X WM1B/A	WM1B/2 WM1B/2X WM1B/2A	WM1B/4 WM1B/4X WM1B/4A	WM1C WM1C/X WM1C/A	WM1C/2 WM1C/2X WM1C/2A	WM1C/4 WM1C/4X WM1C/4A	WM1C/6 WM1C/6X WM1C/6A
Porte Türen Doors Portes Puertas	DX	1	1	2	2	1	3	3	2	1
	SX	1	-	1	-	-	1	-	-	-

