FAGOR

FAGOR INDUSTRIAL

DESPIECE TÉCNICO
TECHNICAL PARTS

Lavavajillas

Dishwasher

MODELOS
COP-174 DD / B DD / HRS DD

Enero 2015 January
Revisado Julio 2015 July Revised



Together we evolve

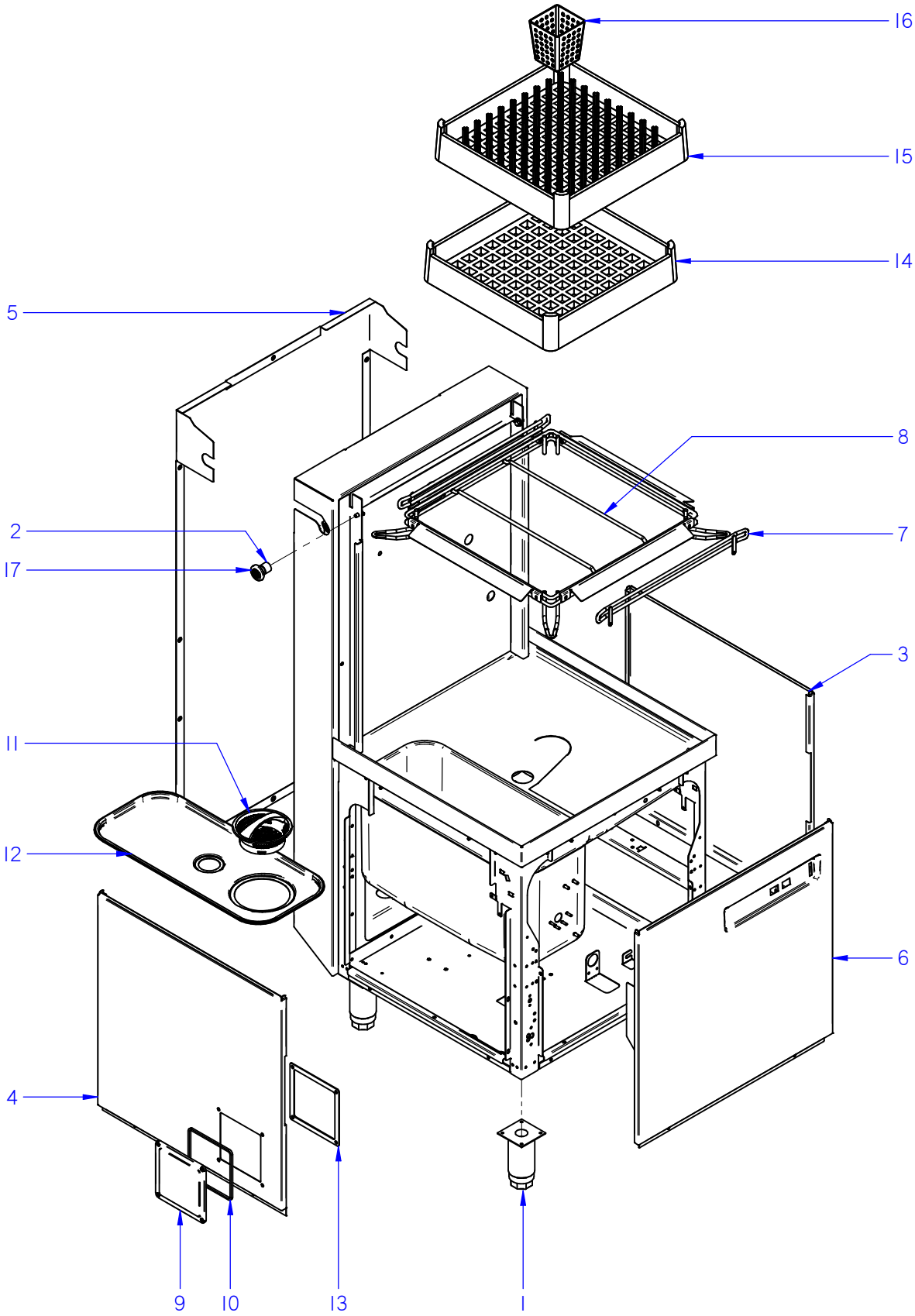

ITEM MARCADO EN COLOR = REPUESTO RECOMENDADO
COLOURED ITEM = RECOMMENDED SPARE PART

N plano / Drawing N.	Firma / Signature	Fecha / Date	Aparato / Appliance	Lamina / Sheet	
C-3357	Iban R.	07-2015	MUEBLE / FRAME LAVAVAJILLAS COP-174 DISHWASHER	1	Fagor Industrial S.Coop. FAGOR Oñate

ZONA / ZONE	ARMAZON / FRAME	LÁMINA / DRAWING	C-3357	FAGOR

ITEM	REFERENCIA REFERENCE	DENOMINACIÓN	DENOMINATION	COP-174	COP-174 HRS						RECOMMENDED	ELIMINADO ELIMINATED	INTRODUCIDO INTRODUCED	NOTAS / NOTES
1	12009104	PATAS REGULABLES	REGULABLE FEET	4	4									
2	12098018	CASQUILLO RODADURA	ROLLING BUSHING	2	2									
3	12120608	PANEL LATERAL DCHO	RIGHT SIDE PANEL	1	1									
4	12120609	PANEL LATERAL IZDO	LEFT SIDE PANEL	1	1									
5	12110635	PANEL POSTERIOR CAPOTA	RARE PANEL	1	_									
5	12111483	PANEL POSTERIOR CAPOTA HRS	RARE PANEL HRS	_	1									
6	12119680	PANEL FRONTAL CONCEPT	CONCEPT FRONT PANEL	1	1									
7	12045900	TOPE BASE CESTILLO COMPLETO	COMPLETE BASKET BASE END	2	2									
8	12045909	BASE CESTILLO VARILLA COMPLETA	COMPLETE WIRE BASKET BASE	1	1									
9	12095220	TAPA CAJA CONEXIONES	CONNECTIONS BOX COVER	1	1									
10	12096947	JUNTA TAPA	COVER'S SEAL	1	1									
11	12048609	CESTILLO RECOGEDOR CONCEPT	CONCEPT DUSTPAN BASKET	1	1									
12	12047947	BANDEJA FILTRO CONCEPT	CONCEPT FILTER TRAY	1	1									
13	12103501	JUNTA EPDM CAJA CONEXIONES	CONNECTION BOX EPDM JOINT	1	1									
14	12025011	CESTILLO BASE CT-10	CT-10 BASE BASKET	1	1									
15	12024990	CESTILLO PLATOS CP-16-18	CP-16-18 PLATES BASKET	1	1									
16	12023745	CESTILLO CUBIERTOS	CUTLERY BASKET	8	8									
17	12047509	RODILLO ELEVACIÓN CAPÓ	HOOD ASCENT ROLLER	2	2									

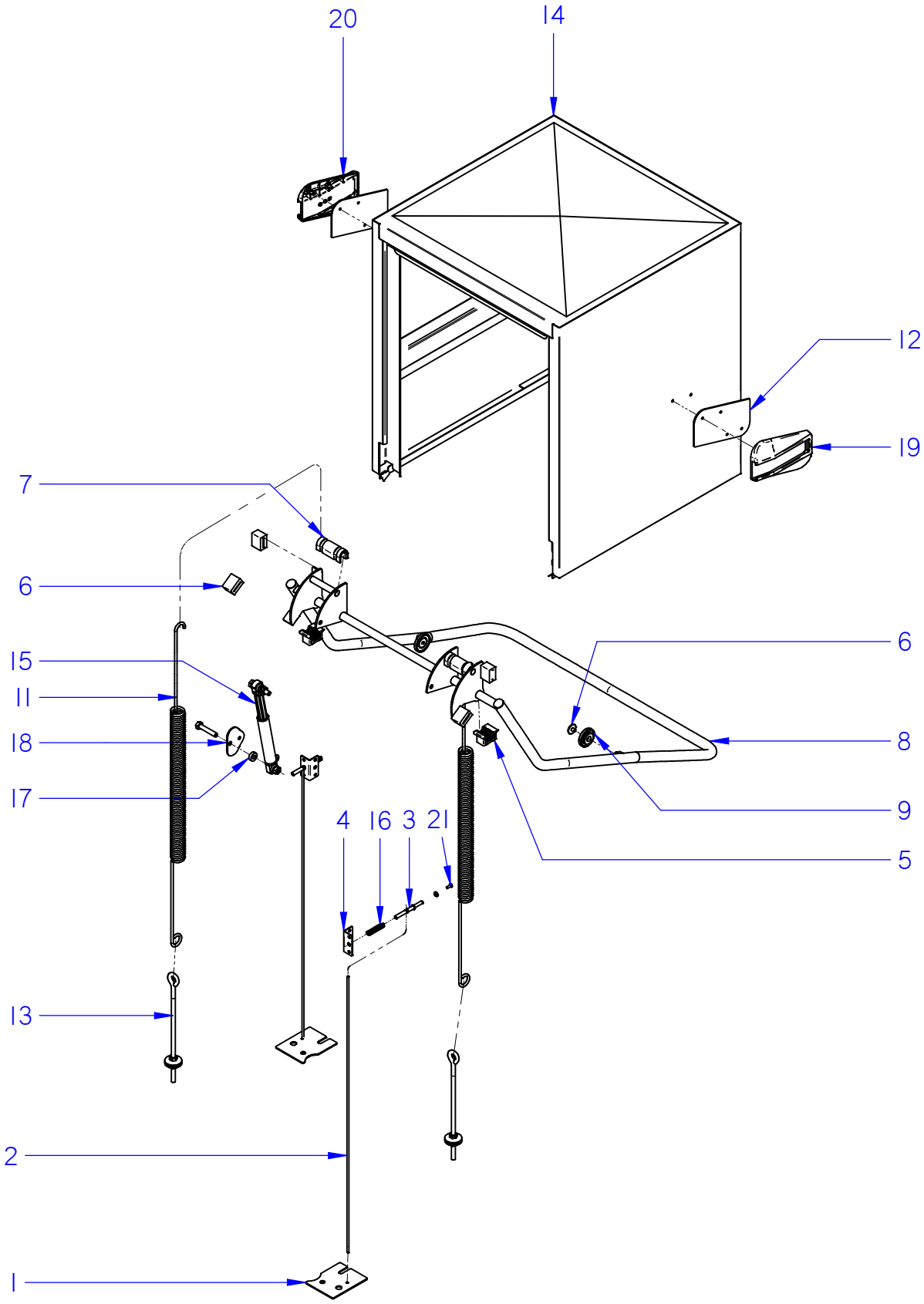

ITEM MARCADO EN COLOR = REPUESTO RECOMENDADO
COLOURED ITEM = RECOMMENDED SPARE PART

N plano / Drawing N.	Firma / Signature	Fecha / Date	Aparato / Appliance	Lamina / Sheet	
C-3358	Iban R.	07-2015	ASA-CAPOTA / HANDLE HOOD LAVAVAJILLAS COP-174 DISHWASHER	2	Fagor Industrial S.Coop. FAGOR Onate

ZONA / ZONE	ASA-CAPOTA / HANDLE-HOOD	LÁMINA / DRAWING	C-3358	FAGOR

ITEM	REFERENCIA REFERENCE	DENOMINACIÓN	DENOMINATION	COP-174							RECOMMENDED	ELIMINADO ELIMINATED	INTRODUCIDO INTRODUCED	NOTAS / NOTES
1	12096877	SOPORTE BLOQUEO SEGURIDAD	SECURITY LOCK SUPPORT	2										
2	12096881	VARILLA BLOQUEO SEGURIDAD	SECURITY LOCK ROD	2										
3	12096882	EJE BLOQUEO SEGURIDAD	SECURITY LOCK SHAFT	2										
4	12096883	TAPA BLOQUEO SEGURIDAD	SECURITY LOCK COVER	2										
5	12098128	SOPORTE DE GIRO EJE ASA	HANDLE AXIS ROD SUPPORT	2										
6	12047537	TOPE GOMA BIELA	CONNECTING ROD RUBBER END	4										
7	12096710	CASQUILLO APOYO MUELLE	SPRING SUPPORT BUSHING	2										
8	12098150	SISTEMA ELEVACION CAPOTA ADV.	HOOD ASCENT SYSTEM ADVANCE	1										
9	12098068	RODILLO ASA CAPOTA EVO	EVO HOOD HANDLE ROLLER	2										
10	12098073	TORNILLO RODILLO ASA EVO	HANDLE ROLLER SCREW	2										
11	12048836	MUELLE CAPOTA K7.5	HOOD SPRING K7.5	2										
12	12093162	JUNTA PLANA CARRIL	GUIDE'S PLANE SEAL	2										
13	12048915	GANCHO ROSCADO M10-L315	THREADED HOOK M10-L315	2										
14	12091140	CONJUNTO CAPO SIMPLE PARED	SIMPLE WALL HOOD ASSEMBLED	1										
15	12024980	AMORTIG. RD10FK 140N SUSPA	SHOCK ABSORVER RD10FK 140N	1										
16	12110409	MUELLE SIS. BLOQUEO CAPOTA	HOOD'S LOCK SYSTEM SPRING	2										
17	12025255	CASQUILLO RODANTE	ROLLING BUSHING	1										
18	12098217	SOPORTE AMORTIGUADOR	SHOCK ABSORVER SUPPORT	1										
19	12091573	CARRIL IZDO CAPOTA	HOOD'S LEFT GUIDE	1										
20	12091933	CARRIL DCHO CAPOTA	HOOD'S RIGHT GUIDE	1										
21	12010242	TORNILLO ESPECIAL M-5X13	SPECIAL SCREW M-5X13	2										

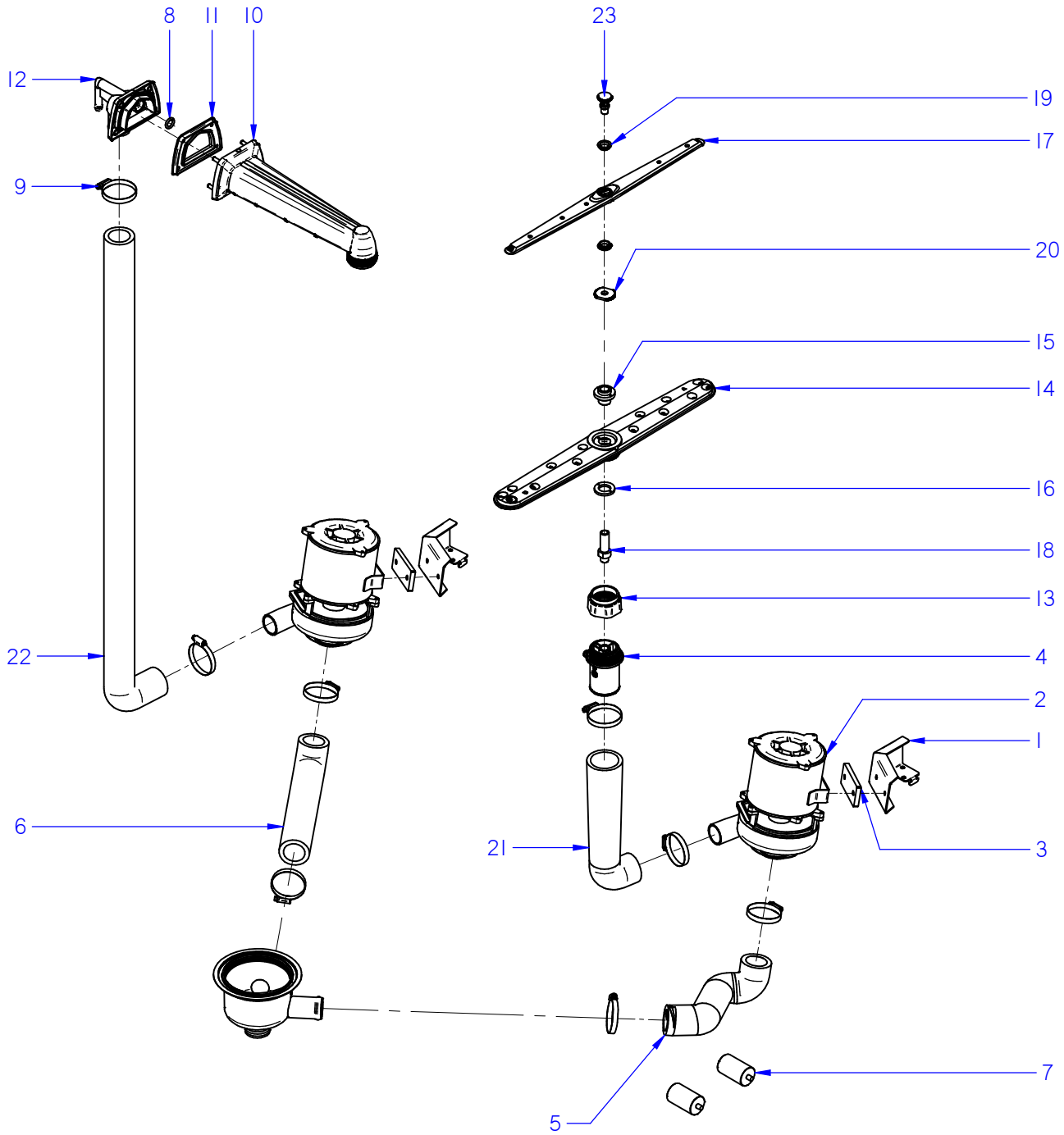

ITEM MARCADO EN COLOR = REPUESTO RECOMENDADO
COLOURED ITEM = RECOMMENDED SPARE PART

N plano / Drawing N.	Firma / Signature	Fecha / Date	Aparato / Appliance	Lamina / Sheet	
C-3359	Iban R.	01-2015	PARTE FUNCIONAL LAVADO / WASHING FUNCTIONAL PART LAVAVAJILLAS COP-174 DISHWASHER	3	Fagor Industrial S.Coop. FAGOR Oñate

ZONA / ZONE	PARTE FUNCIONAL LAVADO / WASHING FUNCTIONAL PART	LÁMINA / DRAWING	C-3359	FAGOR

ITEM	REFERENCIA REFERENCE	DENOMINACIÓN	DENOMINATION	COP-174							RECOMMENDED	ELIMINADO ELIMINATED	INTRODUCIDO INTRODUCED	NOTAS / NOTES
1	12046160	SOPORTE BOMBA LAVADO	WASHIG PUMP SUPPORT	2										
2	12043287	MOTOBOMBA 590KW 50Hz	WASHIG PUMP 590KW 50Hz	2							X			
2	12102834	MOTOBOMBA 590KW 60Hz	WASHIG PUMP 590KW 60Hz	2							X			
3	12023556	BASE BOMBA LAVADO 1003016	WASHIG PUMP BASE 1003016	2										
4	12047910	SOP. DISTRIBUIDOR INFERIOR	LOWER SPRY-ARM SUPPORT	1										
5	12047688	CONDUCTO ASPIRACION 2 BOMB.	2 PUMP SUCTION PIPE	1										
6	12046162	CONDUCTO ASPIRACION	SUCTION PIPE	1										
7	12024376	CONDENSADOR 10MF	10MF CONDENSER	2							X			
8	12049214	JUNTA TORICA ACLARADO 13.8-3.5	RINSING O-RING 13,8-3,5	1										
9	12009962	ABRAZADERA 40-60	40-60 CLAMP	8										
10	12048173	BRAZO LAVAD-ACLAR. CAPOTA	WASH-RINSE ARM	1										
11	12048366	JUNTA BRAZO LAVADO-ACLAR.	WASH-RINSE ARM'S SEAL	1										
12	12048367	CIERRE BRAZO LAVADO-ACLAR.	WASH-RINSE ARM'S CLOSURE	1										
13	12048171	ADAPTADOR RAMAS LAVADO 2 BOMB.	WASHING ARMS ADAPTER 2 PUMPS	2										
14	12003421	DISTRIBUIDOR COMPLETO	COMPLETE SPRY-ARM	2										
15	12025116	CASQUILLO DISTRIBUIDOR	SPRY-ARM'S BUSHING	2										
16	12023674	ARANDELA AMARRE	TIGHTEN UP WASHER	2										
17	12102984	DISTRIBUIDOR ACLARADO CONCEPT	CONCEPT RINSE SPRY-ARM	2										
18	12112480	EJE LAVADO CAPOTA CONCEPT	WASHING SHAFT	2										
19	12041628	PROTECTOR FUGAS ACLARADO	RINSE LEAKAGE PROTECTOR	4										
20	12043288	TUERCA ESPECIAL	SPECIAL NUT	2										
21	12047689	CODO IMPULSION 2 BOMBAS	2 PUMP EXPULSION ELBOW	1										
22	12047690	ARBOL LAVADO 2 BOMBAS	2 PUMS WASHING TREE	1										
23	12043422	EJE ACLARADO	RINSING SHAFT	2										

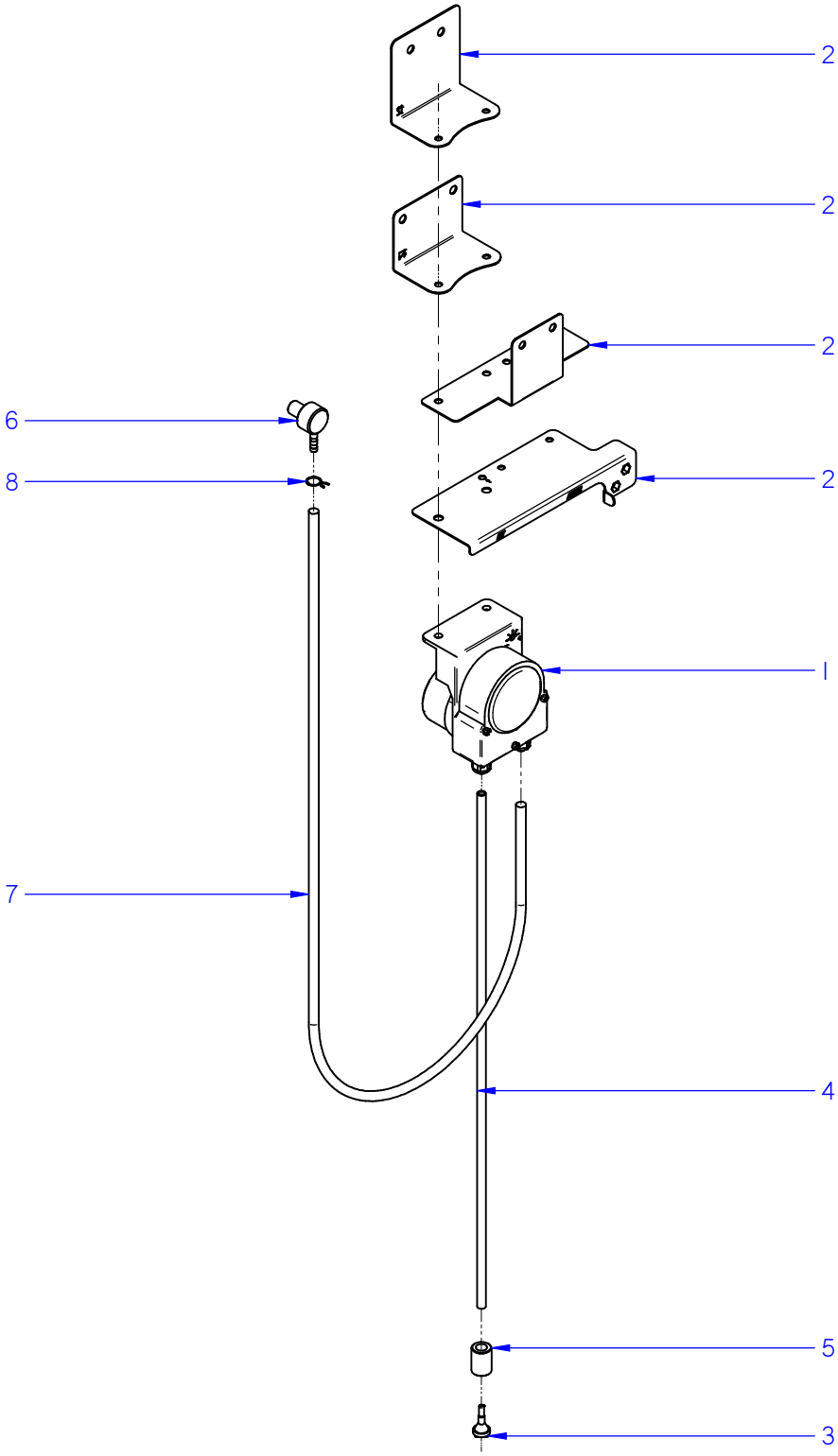

ITEM MARCADO EN COLOR = REPUESTO RECOMENDADO
COLOURED ITEM = RECOMMENDED SPARE PART

N plano / Drawing N.	Firma / Signature	Fecha / Date	Aparato / Appliance KIT DOSIFICADOR DETERGANTE / DETERGENT DISPENSER KIT	Lamina / Sheet	
C-3360	Iban R.	01-2015	LAVAVAJILLAS COP-174 DD DISHWASHER	4	Fagor Industrial S.Coop. FAGOR Oñate

ZONA / ZONE	KIT DOSIFICADOR DETERGENTE / DETERG. DISPENSER KIT	LÁMINA / DRAWING	C-3360	FAGOR

ITEM	REFERENCIA REFERENCE	DENOMINACIÓN	DENOMINATION	COP-174 DD							RECOMMENDED	ELIMINADO ELIMINATED	INTRODUCIDO INTRODUCED	NOTAS / NOTES
	19022347	**KIT DOSIFICADOR DETERGENTE EVO**	**DETERGENT DISPENSER KIT EVO**											
1	12024216	DOSIF. DGTE REGULABLE G300	DETERG. REGUL. DISPENSER	1							X			
2	12120598	SOP. DOSIFICADORES CAPOTA	DISPENSERS SUPPORT	1										CAPOTA - PASS-THOUGH
2	12046465	SOPORTE BOMBA PERISTALTICA	PERISTALTIC PUMP SUPPORT	1										LAVAVASOS 21
2	12049139	SOPORTE DOS. DETERGENTE 12	DISPENSERS SUPPORT	1										LAVAVASOS 12
2	12102040	SOP. DOSIF. DETERGENTE AF	DISPENSERS SUPPORT FRONT LOAD.	1										AP.FRONTAL - FRONT LOADING
3	12011355	FILTRO ASPIRACION	SUCTION FILTER	1										
4	12024139	CONDUCTO ASPIRACIÓN AZKOY	AZKOY SUCTION PIPE	1										
5	12024353	PESO FILTRO	FILTER'S WEIGHT	1										
6	12024531	INYECTOR DETERGENTE INOX	DETERGENT INJECTOR	1										
7	11000079	CONDUCTO DOSIF. TRANSP 6X4	DISPENSER TRANSPARENT PIPE	1										
8	12023707	BRIDA ELASTICA TUBO	ELASTIC CLAMP FOR PIPES	1										
	12024314	CABLEADO DOSIF. DETERGENTE	DETERGENT DISPENSER WIRING	1										

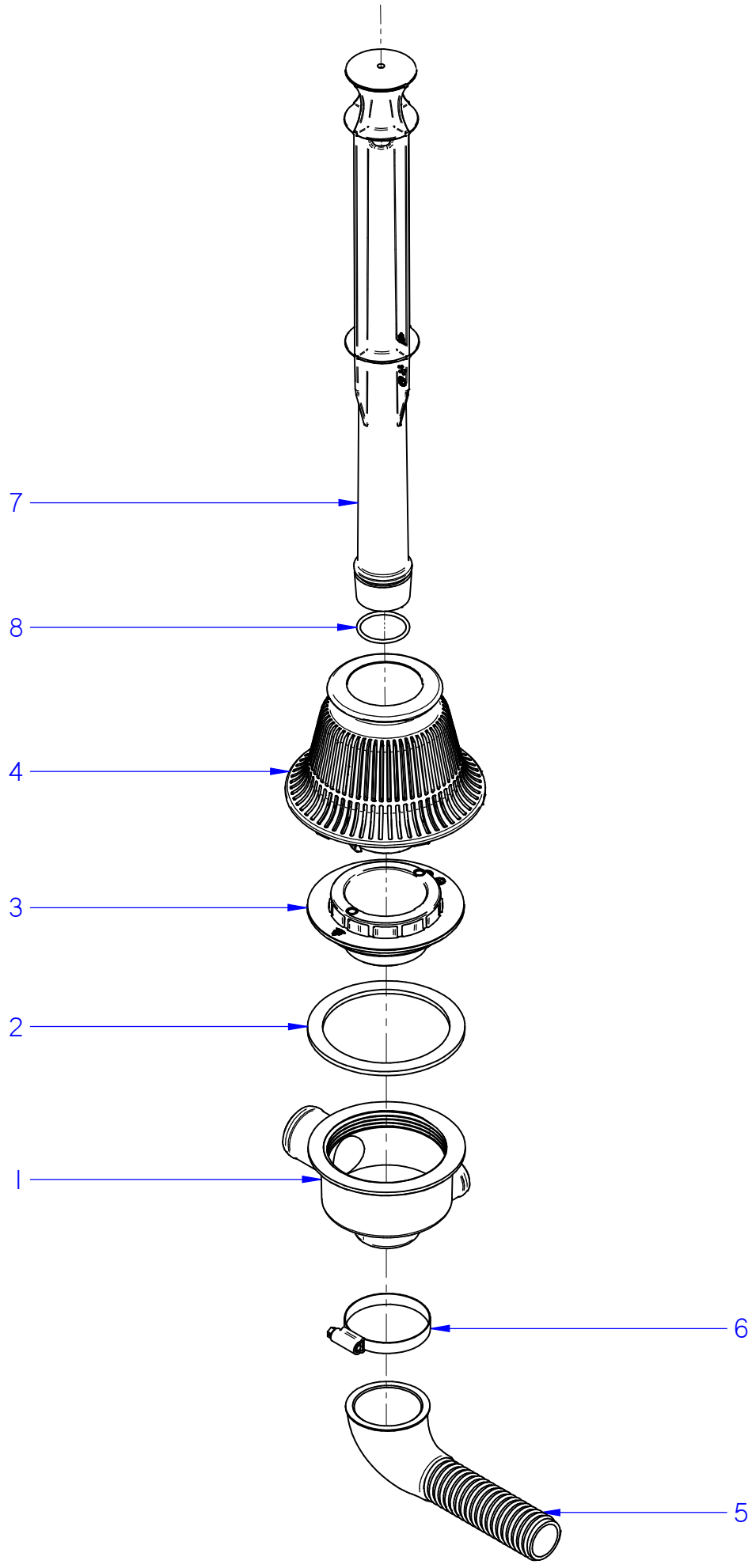

ITEM MARCADO EN COLOR = REPUESTO RECOMENDADO
COLOURED ITEM = RECOMMENDED SPARE PART

N plano / Drawing N.	Firma / Signature	Fecha / Date	Aparato / Appliance	Lamina / Sheet	
C-3361	Iban R.	01-2015	DESAGÜE / DRAINING PART LAVAVAJILLAS COP-174 DD DISHWASHER	5	Fagor Industrial S.Coop. FAGOR Oñate

ZONA / ZONE	DESAGÜE / DRAIN	LÁMINA / DRAWING	C-3361	FAGOR

ITEM	REFERENCIA REFERENCE	DENOMINACIÓN	DENOMINATION	COP-174 DD							RECOMMENDED	ELIMINADO ELIMINATED	INTRODUCIDO INTRODUCED	NOTAS / NOTES
1	12048037	CUBETA 2 BOMBAS CAPOTA	PASS-THROUGH PAIL 2 PUMPS	1										
2	12048717	JUNTA TORICA O-126.35X5.33	O-RING O-126.35X5.33	1										
3	12048039	AMARRE CUBETA CAPOTA	PASS-THROUGH PAIL FASTENING	1										
4	12049652	FILTRO COMPLETO CONCEPT	COMPLETE FILTER CONCEPT	1										
5	12024473	MANGUERA DESAGÜE	DRAINING PIPE	1							X			
6	12009962	ABRAZADERA 40-60	40-60 CLAMP	1										
7	12120611	ALIVIADERO CONCEPT CAPOTA	PASSTHROUGH CONCEPT SPILLWAY	1										
8	12048748	JUNTA TÓRICA ALIVIADERO 37-32-2.5	SPILLWAY O-RING 37-32-2.5	1										

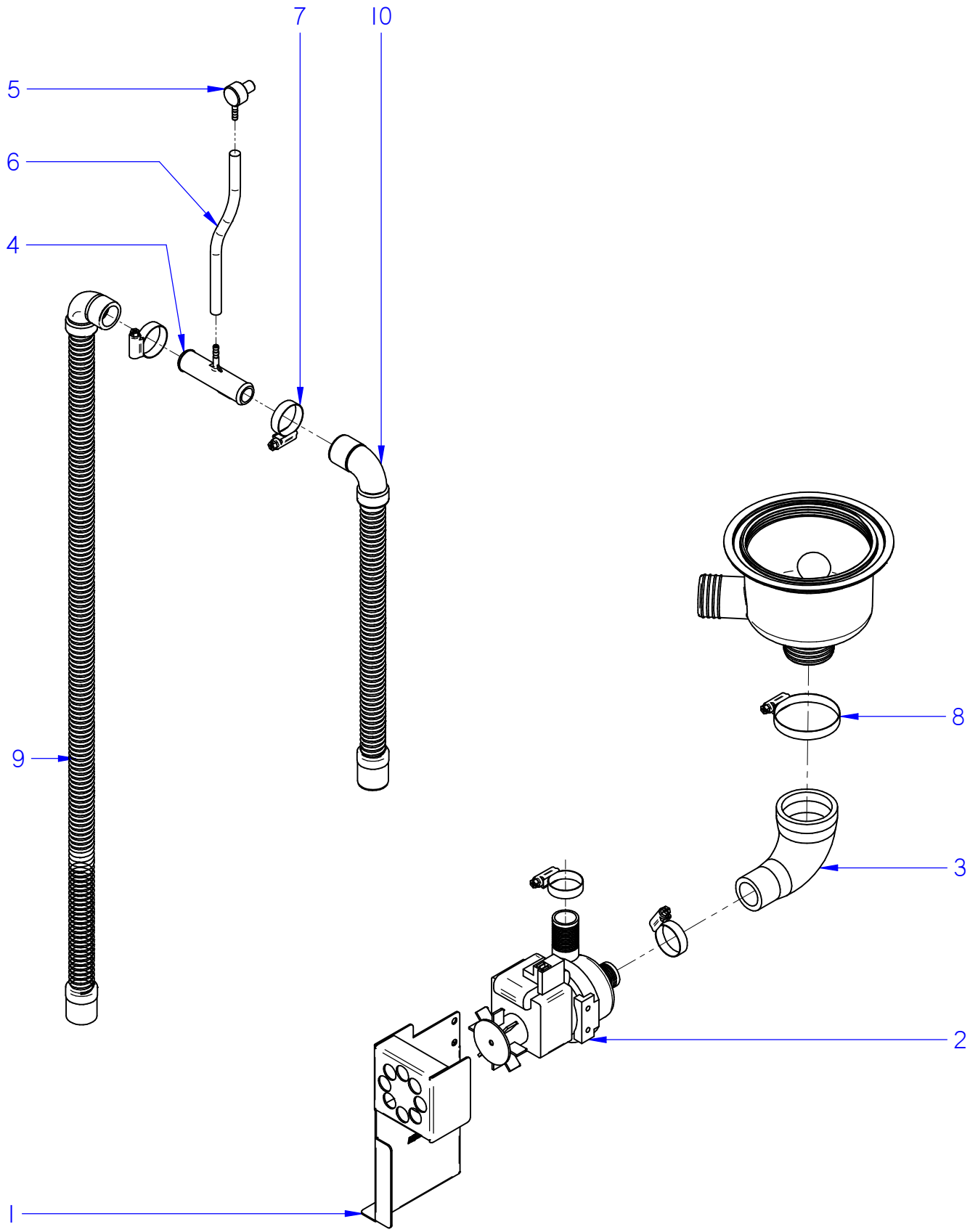

ITEM MARCADO EN COLOR = REPUESTO RECOMENDADO
COLOURED ITEM = RECOMMENDED SPARE PART

N plano / Drawing N.	Firma / Signature	Fecha / Date	Aparato / Appliance	Lamina / Sheet	
C-3362	Iban R.	01-2015	KIT BOMBA DESAGÜE / DRAINING PUMP KIT LAVAVAJILLAS COP-174 B DISHWASHER	6	Fagor Industrial S.Coop. FAGOR Oñate

ZONA / ZONE	KIT BOMBA DESAGÜE / DRAINING PUMP KIT	LÁMINA / DRAWING	C-3362	FAGOR

ITEM	REFERENCIA REFERENCE	DENOMINACIÓN	DENOMINATION	COP-174 B							RECOMMENDED	ELIMINADO ELIMINATED	INTRODUCIDO INTRODUCED	NOTAS / NOTES
	19022349	**KIT BOMBA DESAGÜE CONCEPT**	**CONCEPT DRAINING PUMP KIT**											
1	12096889	SOPORTE BOMBA CONCEPT	DRAINING PUMP'S SUPPORT	1										
2	12023456	BOMBA DESAGUE	DRAINING PUMP	1							X			
3	12049606	CODO BOMBA DESAGÜE	DRAINING PUMP'S ELBOW	1										
4	12041519	EMPALME DESAGÜE	DRAINING JOINT	1										
5	12024531	INYECTOR DETERGENTE INOX	DETERGENT INJECTOR	1										
6	11000083	TUBO GOMA NEGRA D 17x10	D 17x10 BLACK RUBBER PIPE	1										
7	12010023	ABRAZADERA 20-32	20-32 CLAMP	4										
8	12009962	ABRAZADERA 40-60	40-60 CLAMP	1										
9	12041934	MANGUERA DESAGÜE	DRAINING PIPE	1							X			
10	12041936	MANGUERA DESAGÜE	DRAINING PIPE	1										

N plano / Drawing N.	Firma / Signature	Fecha / Date	Aparato / Appliance	ACLARADO / RINSE PART	Lamina / Sheet
C-3363	Iban R.	01-2015	LAVAVAJILLAS COP-174 DISHWASHER		7

Fagor Industrial S.Coop. Onate

ITEM MARCADO EN COLOR = REPUESTO RECOMENDADO
COLOURED ITEM = RECOMMENDED SPARE PART

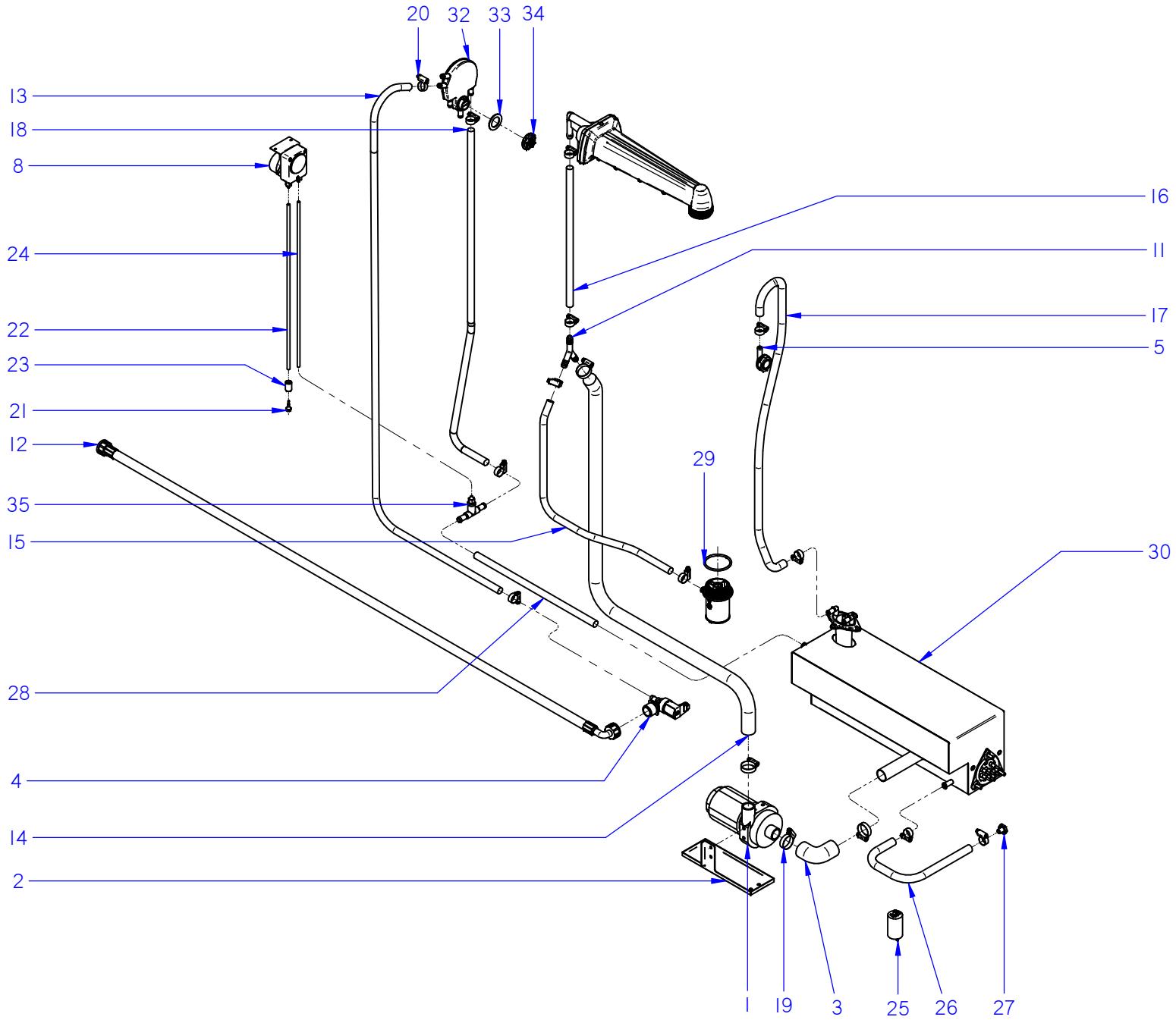

ZONA / ZONE	PARTE FUNCIONAL ACLARADO / FUNCTIONAL RINSE PART	LÁMINA / DRAWING	C-3363	FAGOR

ITEM	REFERENCIA REFERENCE	DENOMINACIÓN	DENOMINATION	COP-174							RECOMMENDED	ELIMINADO ELIMINATED	INTRODUCIDO INTRODUCED	NOTAS / NOTES
1	12024233	BOMBA ACLARADO HANNING	HANNING RINSING PUMP	1							X			
2	12110537	SOPORTE BOMBA ACLARADO	RINSING PUMP'S SUPPORT	1										
3	12041928	CONDUCTO CALDERIN-BOMBA	BOILER-PUMP HOSE	1										
4	12095427	E.V SIMPLE 220V SALIDA A 90º	SIMPLE E.V 90º EXIT	1							X			
5	12097453	CONDUCTO AIREACION CALDERIN	BOILER VENTILATION ELBOW	1										
8	12092198	DOSIFICADOR ABRILLANTADOR	RINSE DISPENSER	1							X			
11	12023511	RACORD EN Y	"Y" SHAPED RACCORD	1										
12	12024115	MANGUERA ENTRADA AGUA	WATER SUPPLY HOSE	1										
13	12114353	TUBO WRAS	WRAS PIPE	1										
14	12046080	COND. IMPULSION ACLARADO	RINSING EXPULSION PIPE	1										
15	11000083	TUBO GOMA NEGRA D 17x10	D 17x10 BLACK RUBBER PIPE	1										
16	11000083	TUBO GOMA NEGRA D 17x10	D 17x10 BLACK RUBBER PIPE	1										
17	11000083	TUBO GOMA NEGRA D 17x10	D 17x10 BLACK RUBBER PIPE	1										
18	12114353	TUBO WRAS	WRAS PIPE	1										
19	12010023	ABRAZADERA 20-32	20-32 CLAMP	4										
20	12010036	ABRAZADERA 12-20	12-20 CLAMP	14										
21	12011355	FILTRO ASPIRACION	SUCTION FILTER	1										
22	12024139	CONDUCTO ASPIRACIÓN AZKOY	AZKOY SUCTION PIPE	1										
23	12024353	PESO FILTRO	FILTER WEIGHT	1										
24	11000079	CONDUCTO DOSIF. TRANSP 6X4	DISPENSER TRANSPARENT PIPE	1										
25	12023600	CONDENSADOR 5 µF	5 µf CONDENSER	1							X			
26	11000083	TUBO GOMA NEGRA D 17x10	BLACK RUBBER PIPE D 17x10	1										
27	12041528	TAPON M10x1.5	M10x1.5 CAP	1										
28	11000083	TUBO GOMA NEGRA D 17x10	BLACK RUBBER PIPE D 17x10	1										
29	12049052	JUNTA 53,57x3,53 SOP DISTR. INF.	53,57x3,53 O-RING	1										
30	12091690	CALDERIN RECTANGULAR	SQUARE BOILER	1										
32	12091121	AIR BREAK	AIR BREAK	1							X			
33	12091122	JUNTA AIR BREAK	AIR BREAK'S SEAL	1										
34	12104339	TUERCA AIR BREAK	AIR BREAK'S NUT	1										
35	12040714	RACOR EN T ANTIRRETORNO	T FITTING NON-RETURN	1										

N plano / Drawing N.	Firma / Signature	Fecha / Date	Aparato / Appliance		Lamina / Sheet
C-3364	Iban R.	03-2015	LAVAVAJILLAS CO-174 DISHWASHER	CONJUNTO ELECTRICO / ELECTRICAL PART	8

ITEM MARCADO EN COLOR = REPUESTO RECOMENDADO
COLOURED ITEM = RECOMMENDED SPARE PART

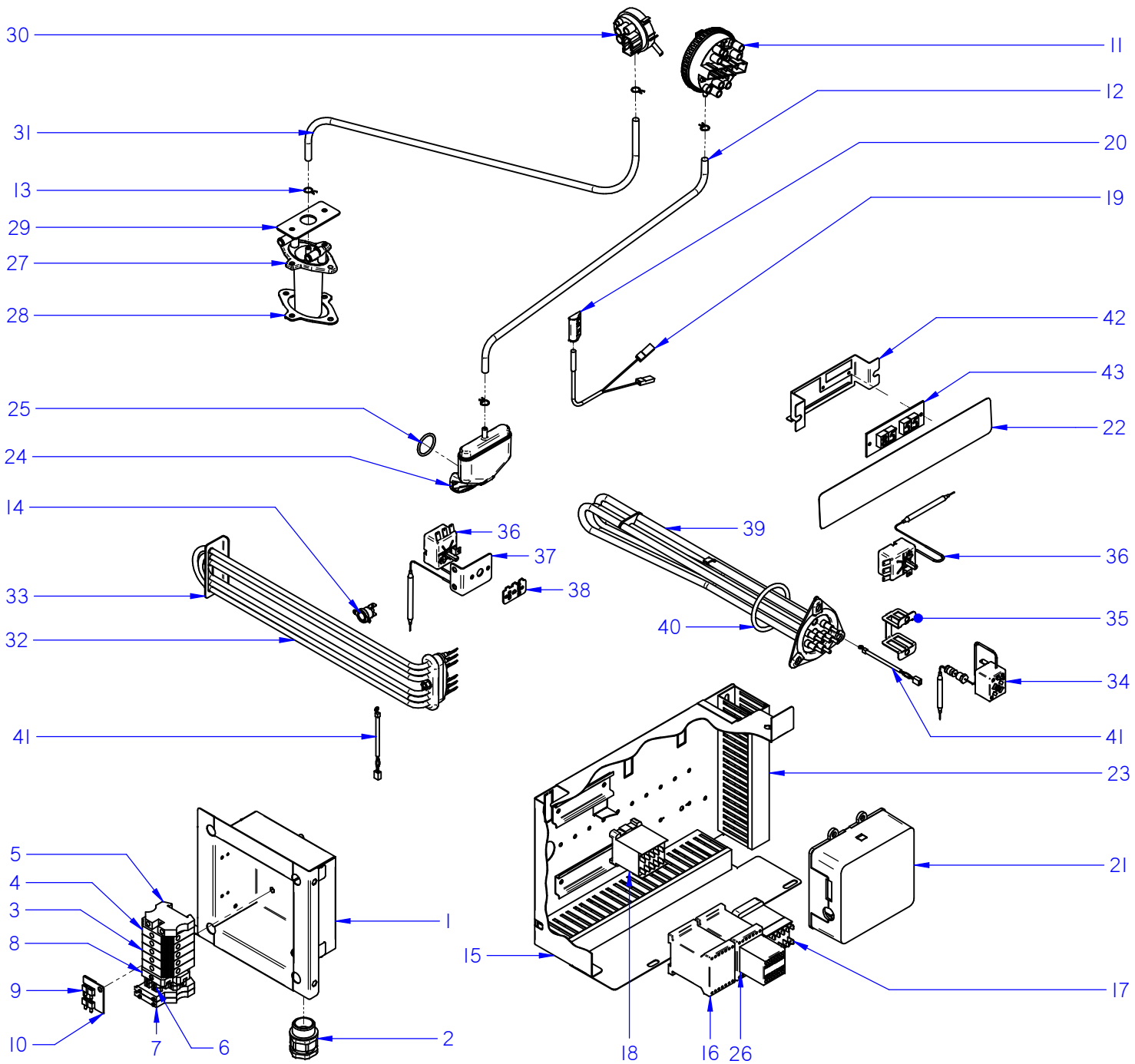

Fagor Industrial S.Coop.
Onate

ZONA / ZONE	CONJUNTO ELECTRICO / ELECTRICAL PART	LÁMINA / DRAWING	C-3364	FAGOR

ITEM	REFERENCIA REFERENCE	DENOMINACIÓN	DENOMINATION	COP-174							RECOMMENDED	ELIMINADO ELIMINATED	INTRODUCIDO INTRODUCED	NOTAS / NOTES
1	12120601	BASE CAJA CONEXIONES	CONNECTIONS BOX BASE	1										
2	12009927	PRENSA ESTOPAS PG-21	PG-21 CABLE GLAND	1										
3	12023373	BORNES 10 WDU-10203.O	10 WDU-10203.O TERMINAL	3										
4	12025224	BORNA DE PASO AZUL	BLUE TERMINAL	2										
5	12024743	BORNE TIER 10 WPE-10103.O	EARTH TERMINAL	1										
6	12025180	REGLETA BORNAJE 2 PISOS	2 LEVEL CONNECTION STRIP	2										
7	12025158	BORNAS PORTA FUSIBLES	FUSE HOLDER TERMINALS	2										
8	12024199	TOPE FINAL	FINAL LIMIT	1										
9	12103361	CONECTOR 2 VIAS 10mm 57A	2 WAY CONNECTOR 57A	3										
10	12103535	SOP. CONECTORES 2 VIAS	2 WAY CONNECTOR'S SUPP.	1										
11	12093675	PRESOSTAT. DOBLE 125/20-190/165	125/20-190/165 PRESSURE SWITCH	1							X			
12	11000066	TUBO GOMA NEGRO D 8x4	D 8x4 BLACK RUBBER PIPE	1										
13	12023707	BRIDA ELASTICA TUBO	ELASTIC CLAMP FOR PIPES	2										
14	12096597	TERM. SEG. 261B 110ºC FAST 90	SEC. THERM. 261B 110ºC FAST 90	1							X			
15	12047752	BASE CUADRO ELECTRICO	ELECTRIAL PANEL'S BASE	1										
16	12024040	CONTACTOR 230V 4VIAS UL	230V 4WAY UL CONTACTOR	2							X			
17	12024011	CONTACTOR 16A 4VIA UL	16A 4VIA CONTACTOR UL	2							X			
18	12024012	CONTACTOR 16A 4VIA UL	16A 4VIA CONTACTOR UL	1							X			
19	12024477	INTERRUPTOR MAGNETICO	MAGNETIC SWITCH	1							X			
20	12024066	AMARRE INTERRUP. MAGNETICO	MAGNETIC SWITCH'S SUPPORT	1										
21	12110837	CONTROL TARJETA 5 RELES	5 RELAY CONTROL CARD	1							X			
22	12119176	EMBELLECEDOR COP-174	COP-174 STICKER	1							X			
23	11000162	CANALETA 60.30.77	60.30.77 CABLE CONDUIT	3										
24	12093146	CAMPANA TANQUE	TUB'S PRESSURE CHAMBER	1							X			
25	12093145	JUNTA TORICA CAMPANA	PRESSURE CHAMBER'S O-RING	1										
26	12123408	KIT CONTACTOR AUXILIAR 400V UL	KIT AUXILIARY CONTACTOR 400V UL	1							X			
27	12091478	CAMPANA CALDERIN	BOILER'S PRESSURE CHAMBER	1							X			
28	12118822	JUNTA CAMPANA CALDERIN	BOILER'S P.CHAMBERS SEAL	1							X			
29	12101852	CHAPA REFUERZA CAMPANA	P. CHAMBER STRENGTHENER	1										
30	12048644	PRESOSTATO SIMPLE 1,40-6,30mbar	1,40/6,30mbar SIMPLE PRES.SWITCH	1							X			
31	11000066	TUBO GOMA NEGRO D 8x4	D 8x4 BLACK RUBBER PIPE	1										
32	12045886	RESISTENCIA 4,5KW TRIPLE	TRIPLE RESISTOR 4,5KW	1							X			

ZONA / ZONE	CONJUNTO ELECTRICO / ELECTRICAL PART	LÁMINA / DRAWING	C-3364	FAGOR

ITEM	REFERENCIA REFERENCE	DENOMINACIÓN	DENOMINATION	COP-174							RECOMMENDED	ELIMINADO ELIMINATED	INTRODUCIDO INTRODUCED	NOTAS / NOTES
33	12049715	SOPORTE RESISTENCIA TANQUE	TUB RESOSTOR SUPPORT	1										
34	12023830	LIMITADOR TECASA 125ºC	TECASA THERMOSTAT 125ºC	1							X			
35	12022151	AMARRE LIMITADOR TECASA	TECASA THERMOST. SUPPORT	1										
36	12040858	TERMOSTATO 16A 85ºC 6MM	THERMOSTAT 16A 85ºC 6MM	2							X			
37	12102004	SOPORTE TERMOSTATO	THERMOSTAT SUPPORT	1										
38	12044848	REGULADOR A 60ºC Tt DE 85ºC	60ºC Tt DE 85ºC REGULATOR	1										
39	12092825	RESIST. 12KW 400MM TRIPLE UL	12kW 400MM TRIPLE RESISTOR	1							X			
40	12118319	JUNTA TÓRICA RESIS. CALDERIN	BOILER RESISTOR'S O-RING	1							X			
41	12025036	CONJUNTO SONDA 64kOHM NTC	64kOHM NTC THERMOSTAT	2										
42	12022219	SOPORTE COMPO. AD AF-LVS	COMPONENTS SUPPORT AD AF-LVS	1										
43	12024028	VISUALIZADOR 12V DC 4DIG. 7SEG.	12V DC 4DIG. 7SEG. DISPLAY	1							X			

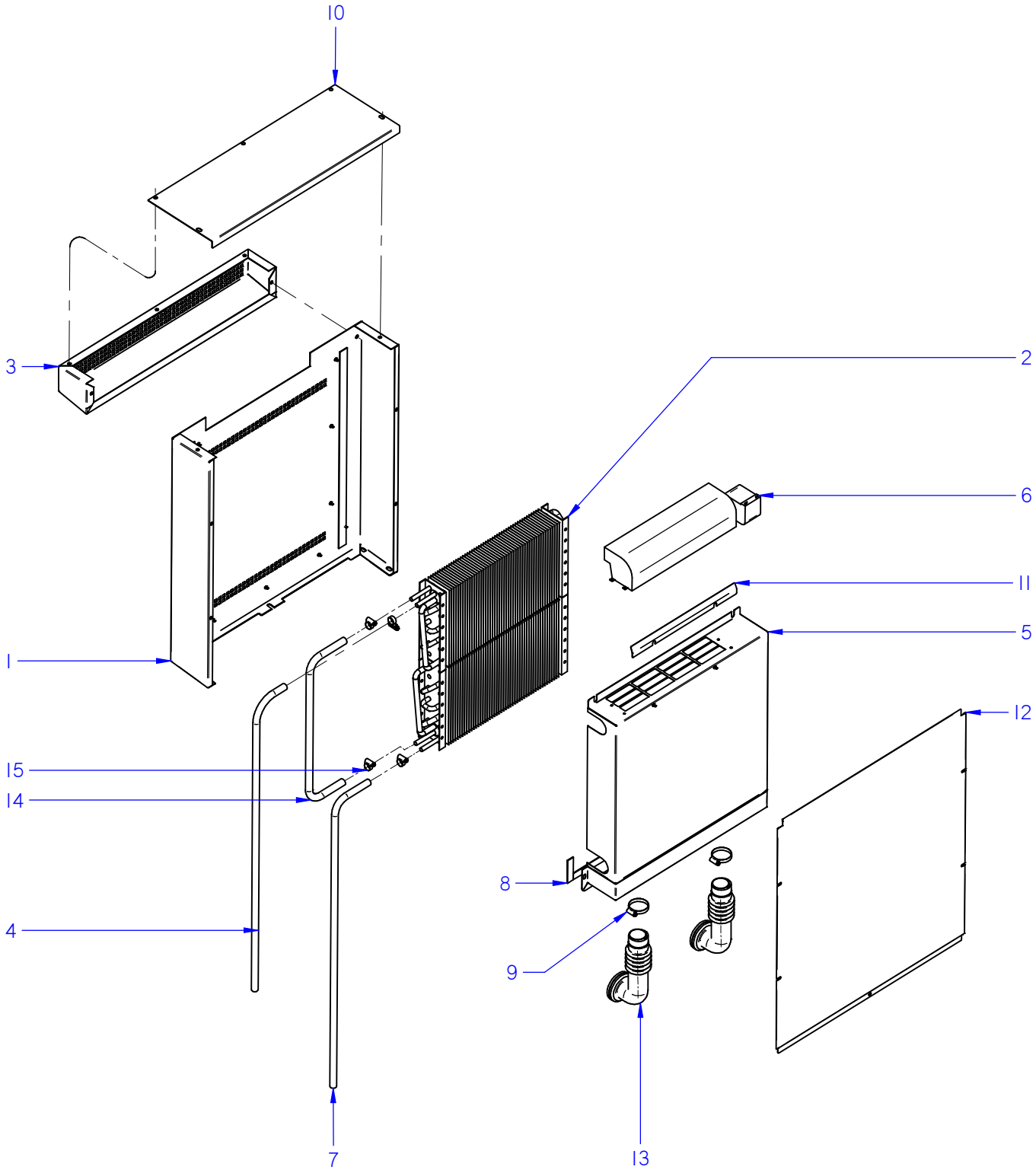

ITEM MARCADO EN COLOR = REPUESTO RECOMENDADO
COLOURED ITEM = RECOMMENDED SPARE PART

N plano / Drawing N.	Firma / Signature	Fecha / Date	Aparato / Appliance	Lamina / Sheet	
C-3365	Iban R.	01-2015	HEAT RECOVERING SYSTEM LAVAVAJILLAS COP-174 HRS DISHWASHER	9	Fagor Industrial S.Coop. FAGOR Onate

ZONA / ZONE	SISTEMA DE RECUPERACIÓN DE CALOR / HEAT RECOVERING SYSTEM	LÁMINA / DRAWING	C-3365	FAGOR

ITEM	REFERENCIA REFERENCE	DENOMINACIÓN	DENOMINATION	COP-174 HRS							RECOMMENDED	ELIMINADO ELIMINATED	INTRODUCIDO INTRODUCED	NOTAS / NOTES
1	12120603	CUBIERTA EXTERIOR COMP. C.U.	C.U. EXTERNAL COVER	1										
2	12048309	SERPENTIN C.U.	C.U. COOLING COIL	2							X			
3	12120604	BISERA REJILLA C.U.	C.U. GRILLED CAP	1										
4	11000083	CONDUCTO HRS - AIRBREAK	HRS - AIRBREAK PIPE	1										
5	12048319	CUBIERTA INTERIOR COMPL. C.U.	C.U. INNER COVER COPLETE	1										
6	12048323	VENTILADOR TANGENCIAL C.U.	C.U. TANGENTIAL FAN	1										
7	11000083	CODUCTO EV - HRS	EV - HRS PIPE	1										
8	12111218	JUNTA LAVAVAJILLAS HRS	HRS DISHWASHER GASKET	1										
9	12009986	ABRAZADERA DIN 3017 W2 32-50L	DIN 3017 W2 32-50L CLAMP	2										
10	12048344	TAPA SUPERIOR C.U.	C.U. TOP COVER	1										
11	12048343	CHAPA DE AIRE C.U.	C.U. AIR SHEET	1										
12	12120605	TAPA POSTERIOR C.U.	C.U. BACK COVER	1										
13	12111213	CODO ENTRADA VAPOR HRS	HRS STEAM INLET ELBOW	2										
14	11000083	TUBO UNIÓN SERPENTINES	COOLING COILS CONNECTION PIPE	1										
15	12010036	ABRAZADERA 12-20	12-20 CLAMP	4										

ZONA / ZONE	VARIOS / VARIOUS		LÁMINA / DRAWING		FAGOR

ITEM	REFERENCIA REFERENCE	DENOMINACIÓN	DENOMINATION	COP-174 DD	COP-174 B DD	COP-174 HRS DD					RECOMMENDED	ELIMINADO ELIMINATED	INTRODUCIDO INTRODUCED	NOTAS / NOTES
	12009946	CABLEADO TENSOR	TENSIONER WIRING	1	1	1								
	12119239	CABLEADO HRS CO, COP, W, 120, 80	HRS CO, COP, W, 120, 80 UL WIRING	1	1	1								
	12120045	INSTALACIÓN ELÉCTR. CO-120 W UL	CO-120 W UL ELECTRICAL WIRING	1	1	1								
	12115668	CABLEADO PORTAMANDOS EVAD 21	CONTROL PANEL WIRING EVAD 21	1	1	1								
	12114419	CABLEADO PORTAMANDOS CO-120	CONTROL PANEL WIRING CO-120	1	1	1								

ZONA / ZONE	RECOMENDADOS / RECOMMENDED		LÁMINA / DRAWING		FAGOR

ITEM	REFERENCIA REFERENCE	DENOMINACIÓN	DENOMINATION	COP-174 DD	COP-174 B DD	COP-174 HRS DD						ELIMINADO ELIMINATED	INTRODUCIDO INTRODUCED	NOTAS / NOTES
2	12043287	MOTOBOMBA 590KW 50Hz	WASHIG PUMP 590KW 50Hz	2	2	2								C-3359
2	12102834	MOTOBOMBA 590KW 60Hz	WASHIG PUMP 590KW 60Hz	2	2	2								C-3359
7	12024376	CONDENSADOR 10MF	10MF CONDENSER	2	2	2								C-3359
1	12024216	DOSIF. DGTE REGULABLE G300	DETERG. REGUL. DISPENSER	1	1	1								C-3360
5	12024473	MANGUERA DESAGÜE	DRAINING PIPE	1	_	1								C-3361
2	12023456	BOMBA DESAGUE	DRAINING PUMP	_	1	_								C-3362
9	12041934	MANGUERA DESAGÜE	DRAINING PIPE	_	1	_								C-3362
1	12024233	BOMBA ACLARADO HANNING	HANNING RINSING PUMP	1	1	1								C-3363
4	12095427	E.V SIMPLE 220V SALIDA A 90º	SIMPLE E.V 90º EXIT	1	1	1								C-3363
8	12092198	DOSIFICADOR ABRILLANTADOR	RINSE DISPENSER	1	1	1								C-3363
25	12023600	CONDENSADOR 5 µF	5 µf CONDENSER	1	1	1								C-3363
32	12091121	AIR BREAK	AIR BREAK	1	1	1								C-3363
11	12093675	PRESOSTAT. DOBLE 125/20-190/165	125/20-190/165 PRESSURE SWITCH	1	1	1								C-3364
14	12096597	TERM. SEG. 261B 110ºC FAST 90	SEC. THERM. 261B 110ºC FAST 90	1	1	1								C-3364
16	12024040	CONTACTOR 230V 4VIAS UL	230V 4WAY UL CONTACTOR	2	2	2								C-3364
17	12024011	CONTACTOR 16A 4VIA UL	16A 4VIA CONTACTOR UL	2	2	2								C-3364
18	12024012	CONTACTOR 16A 4VIA UL	16A 4VIA CONTACTOR UL	1	1	1								C-3364
19	12024477	INTERRUPTOR MAGNETICO	MAGNETIC SWITCH	1	1	1								C-3364
21	12110837	CONTROL TARJETA 5 RELES	5 RELAY CONTROL CARD	1	1	1								C-3364
22	12119176	EMBELLECEDOR COP-174	COP-174 STICKER	1	1	1								C-3364
24	12093146	CAMPANA TANQUE	TUB'S PRESSURE CHAMBER	1	1	1								C-3364
26	12123408	KIT CONTACTOR AUXILIAR 400V UL	KIT AUXILIARY CONTACTOR 400V UL	1	1	1								C-3364
27	12091478	CAMPANA CALDERIN	BOILER'S PRESSURE CHAMBER	1	1	1								C-3364
28	12118822	JUNTA CAMPANA CALDERIN	BOILER'S P.CHAMBERS SEAL	1	1	1								C-3364
30	12048644	PRESOSTATO SIMPLE 1,40-6,30mbar	1,40/6,30mbar SIMPLE PRES.SWITCH	1	1	1								C-3364
32	12045886	RESISTENCIA 4,5KW TRIPLE	TRIPLE RESISTOR 4,5KW	1	1	1								C-3364
34	12023830	LIMITADOR TECASA 125ºC	TECASA THERMOSTAT 125ºC	1	1	1								C-3364
36	12040858	TERMOSTATO 16A 85ºC 6MM	THERMOSTAT 16A 85ºC 6MM	2	2	2								C-3364
39	12092825	RESIST. 12KW 400MM TRIPLE UL	12kW 400MM TRIPLE RESISTOR	1	1	1								C-3364
40	12118319	JUNTA TÓRICA RESIS. CALDERIN	BOILER RESISTOR'S O-RING	1	1	1								C-3364
43	12024028	VISUALIZADOR 12V DC 4DIG. 7SEG.	12V DC 4DIG. 7SEG. DISPLAY	1	1	1								C-3364
2	12048309	SERPENTIN C.U.	C.U. COOLING COIL	_	_	2								C-3365

1	12120045
2	12115668
2 W	12114419
4 HRS	12119239
Prensa estopas	12009927
Esquema teorico	12103187
Indicador de componentes	12022162
Leyenda	12103338

CO 172, COP 174W

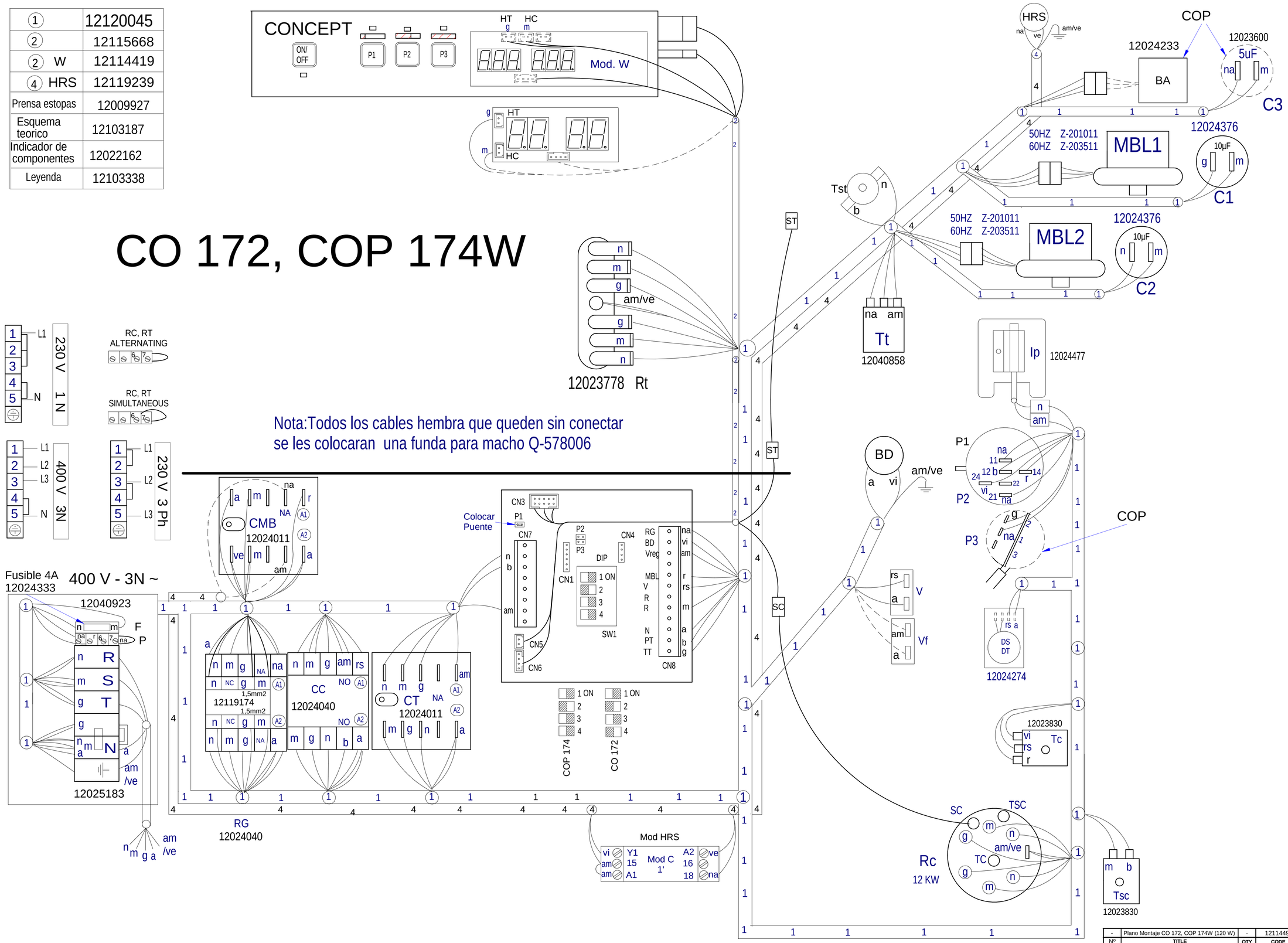

Nº	TITLE	QTY	CODE	MATERIAL	TREATMENT
-	Plano Montaje CO 172, COP 174W (120 W)	-	12114495		

GENERAL TOLERANCES: ISO 2768-1 Very Coarse

	Fine	Medium	Coarse	Very Coarse
LINEAR	<3mm	±0.05	±0.10	±0.15
	3-6mm	±0.05	±0.10	±0.20
	6-30mm	±0.10	±0.20	±0.50
	30-120mm	±0.15	±0.30	±0.80
	120-400mm	±0.20	±0.50	±1.20
	400-1000mm	±0.30	±0.80	±2.00
	1000-2000mm	±0.50	±1.20	±3.00

GENERAL TOLERANCE FOR FORM AND POSITION: ISO 2768-2

	Fine	Medium	Coarse	Very Coarse
ANGULAR	<10mm	±1°	±1°30'	±3°
	10-50mm	±30'	±1°	±2°
	50-120mm	±20'	±30'	±1°
	120-400mm	±10'	±15'	±30'
	>400mm	±5'	±10'	±20'

LAVAVAJILLAS

FAGOR INDUSTRIAL

DESIGNED BY	VALIDATED BY	DATE
M.Maillo	A.G.	12.06.2014

SHEET FORMAT:	A1
DESING CENTER:	ONA
MAT STATUS:	
DOC STATUS:	
SHEET:	1 / 1
SCALE:	1:1

12114495

REVISION

PROPOSED BY: - ISSUE DATE:

CO-502, COP-504

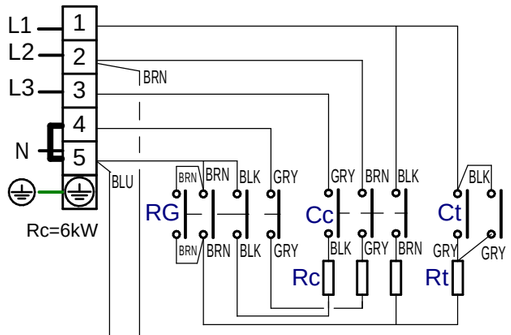

400 V, 3N

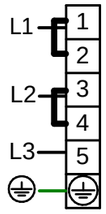

230 V 3Ph

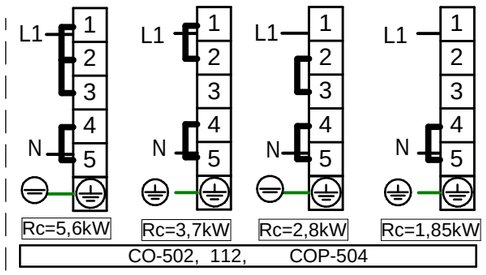

230 V, 1 N

CO 112, 172, COP-174

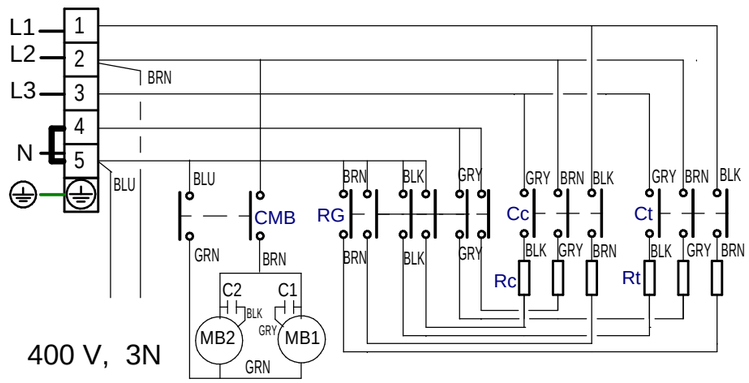

400 V, 3N

CO 352, 402

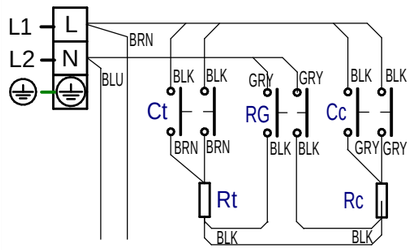

230 V, 1 N

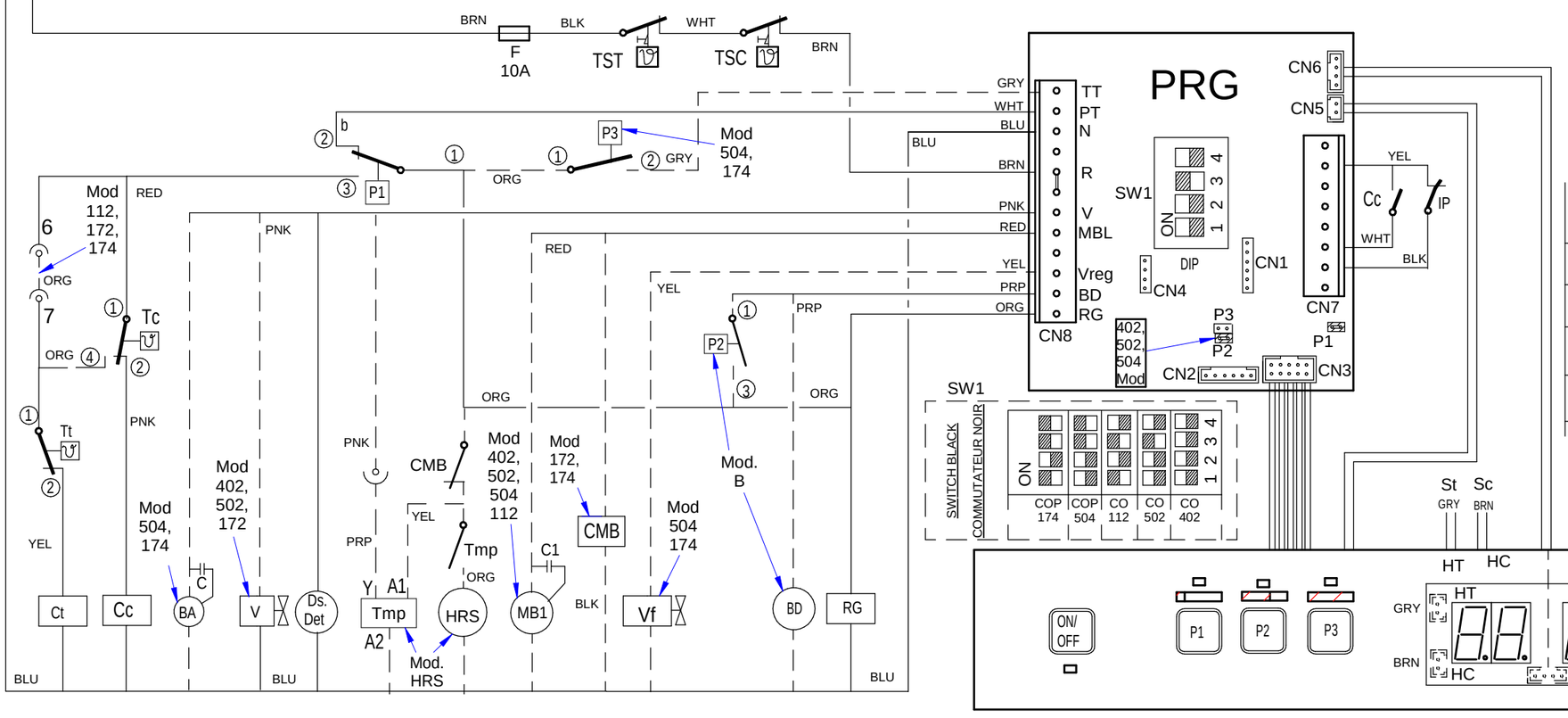

CYCLE

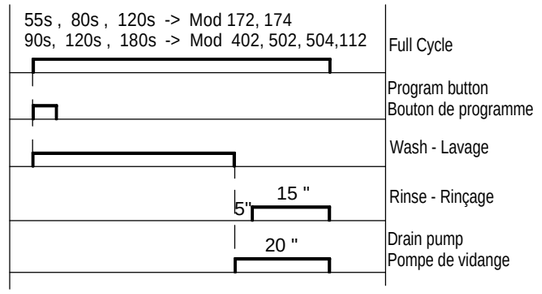

12121300

-	Esquema Teorico CO XX2, COP XX4,	-	12121300		
Nº	TITLE	QTY	CODE	MATERIAL	TREATMENT

GENERAL TOLERANCES: ISO 2768-1 Very Coarse

LINEAR	Fine	Medium	Coarse	Very Coarse
<3mm	±0.05	±0.10	±0.15	
3-6mm	±0.05	±0.10	±0.20	
6-30mm	±0.10	±0.20	±0.50	
30-120mm	±0.15	±0.30	±0.80	
120-400mm	±0.20	±0.50	±1.20	
400-1000mm	±0.30	±0.80	±2.00	
1000-2000mm	±0.50	±1.20	±3.00	

ANGULAR	Fine	Medium	Coarse	Very Coarse
<10mm	±1º	±1º30'	±3º	
10-50mm	±30'	±1º	±2º	
50-120mm	±20'	±30'	±1º	
120-400mm	±10'	±15'	±30'	
>400mm	±5'	±10'	±20'	

GENERAL TOLERANCE FOR FORM AND POSITION: ISO 2768-2

LAVAVAJILLAS

FAGOR INDUSTRIAL

DESIGNED BY	VALIDATED BY	DATE
M.Maillo	A.gallastegui	19.01.2015

SHEET FORMAT:	A3
DESING CENTER:	ONA
MAT STATUS:	
DOC STATUS:	
SHEET:	1 / 1
SCALE:	1:1

12121300

REVISION

-

PROPOSED BY: -

ISSUE DATE:

LEYENDA APERTURA FRONTAL Y CAPOTA

	ESPAÑOL	ENGLISH	FRANÇAIS	DEUTSCH	ITALIANO	中文
Ⓐ Ⓑ	Puntos de conexion con R	Conecction point with R	Points de conexion R	Anschlußpunkte mit R	Punti di collegamento con R	带R接触点
BA	Bomba Aclarado	Rinse pump				
BD	Bomba desagüe	Drain pump	Pompe de vidange	Abflußpumpe	Pompa scarico	排水泵
C1, C2, C3	Condensador	Condenser	Condensateur	Kondensator	Condensatore	电容
CMB	Contactor bomba lavado	Wash pump contactor	Contacteur pompe lavage	Türrelais	Contattore pompa lavaggio	清洗泵接触器
Cc	Contactor calentamiento calderin	Boiler heating contactor	Contacteur chauf. surchauffeur	Kontaktschütz Waschpumpe	Contattore riscaldamento boiler	升温箱加热接触器
Ct	Contactor calentamiento tanque	Tank heating contactor	Contacteur chaufage cuve	Kontaktschütz Boilerheizung	Contattore riscaldamento serbatoio	水箱加热接触器
CP	Rele puerta	Door relay	Relais porte	Kontaktschütz Heizung Tank	Rele porta	门继电器
Ds.	Dosificador	Detergent doser	Dosseur	Dosierer Spülmittel	Dosatore detersivo	清洗剂药液泵
E.B	Electrobomba de presion	Electric pressure pump	Electropompe de pression	Elektro-Drucksteigungspumpe	Electropompa pressione	电子压力泵
IG	Interruptor general	Main switch	Interrupteur general	Hauptschalter	Interruttore generale	主开关
IP	Micro puerta	Door microswitch	Micro porte	Mikroschalter Tür	Micro porta	门磁开关
H1	Piloto de encendido	Operation light	Voyant funcionement	Betriebsanzeigelampe	Spia accensione	运行指示灯
H2	Piloto marcha	Start light	Voyant demarrage	Startanzeigelampe	Spia avvio	开始指示灯
H3	Piloto maquina preparada	Light machine ready	Voyant machine prêt	Betriebsbereitschaftsanzeigelampe	Pilota macchina preparata	加热完成 指示灯
HSal	Piloto falta de Sal	Light Lack of Salt				
MB1, MB2	Bomba lavado	Wash pump	Pompe lavage	Waschpumpe	Pompa lavaggio	清洗泵
M	Motor programador	Motor programmer	Moteur du programmateur	Motor Programmiervorrichtung	Motore programmatore	程序电机
M Av. R	Motor program. avance rapido	Motor program. rapid advance	Moteur du progr.avance rapide	Motor Programmiervorrich. Betrieb	Motore programmatore avanzamento rapido	程序电机. 高速高级
M1	Micro programador marcha	Micro programmer on	Micro du programm. de marche	Motor Programmiervorrich. Waschen	Micro programma. di funzionamento	微程序 开
M2	Micro programador lavado	Micro programmer wash	Micro du programm. de lavage	Motor Programmiervorrich. Spülen	Micro programmatore di lavaggio	微程序 清洗
M3	Micro programador aclarado	Micro programmer rinse	Micro du programm. de rinçage	Motor Programmiervorrich. Vorlauf	Micro programmatore di risciacquo	微程序 喷淋
M4, M5	Micro programador avance	Micro programmer advance	Micro du programm. avance	Motor Programmiervorrich. schneller Vorlauf	Micro programmatore avanzamento	微程序 高级
P1, P3	Presostato	Pressure switch	Pressostat	Druckwächter	Pressostato	压力开关
P2	Presostato limitador	Hi-limit pressure switch	Pressostat de securité	Begrenzer Druckwächter	Pressostato limitatore	高水位限制 压力开关
R	Rele de Generador de A.C.	Generator relay	Relais du Generateur	Relais Generator	Rele Generatore	热水供应器继电器
RG	Rele General	Main Relay		Stromversorgungsanschluß Gener.		
Ⓛ1 Ⓛ2 Ⓛ3 Ⓝ	Alimentac. Generador A.C.	Water heater feeding	Alimentation generateur		Alimentazione generatore	热水供应器电源线
RC	Resistencia calderin	Boiler heating element	Resistance surchauffeur	Heizwiderstand Boiler	Resistenza boiler	升温箱加热管
RT	Resistencia tanque	Tank heater	Resistance cuve	Heizwiderstand Tank	Resistenza serbatoio	水箱加热管
Tt	Termostato tanque	Tank thermostat	Thermostat de cuve	Thermostat Tank	Termostato serbatoio	水箱温控器
TC	Termostato calderin	Boiler thermostat	Thermostat surchauffeur	Thermostat kessel	Termostato boiler	升温箱温控器
Tst	Limitador tanque	Tank limiter	Limitateur de cuve	Begrenzer Tank	Limitatore serbatoio	水箱安全温控器
TSC	Limitador calderin	Boiler Hi-limit	Limiteur surchauffeur	Begrenzer Boiler	Limitatore boiler	升温箱安全温控器
TSTP	Termostato termo-stop	Termo-stop Thermostat	Thermostat Termo-stop	Thermostat Termo-stop	Termostato Termo-stop	温度停止温控器
V	Electrovalvula llenado y aclarado	Fill and rinse valve	Electrovan. remplissage rinçage	Elektroventil Füllen und Spülen	Elettroval. riempimento e risciacquo	电磁阀
Vf	Electrovalvula Aclarado Frio	Cold Water rinse valve				
VR1, VR2, VR3, BR	Electrovalvula Descalcificacion	Soft Water valve				
VE,	Ventilador cuadro electrico	Switchboard fan	Ventilateur tableau electrique	Schalttafelventilator	Ventilatore quadro elettrico	风机
HRS	Sistema recuperacion energia	Heat Recovery System				

COLOR	COLORES	COLOUR	COULEURS	FARBEN	COLORE	颜色
a = BLU =	Azul	Blue	Bleu	Blau	Blu	蓝
am = YEL =	Amarillo	Yellow	Jaune	Gelb	Giallo	黄
am/ve = YEL/GRN	Amarillo/verde	Yellow / green	Jaune / vert	Gelb/grün	Giallo/verde	黄/绿
b = WHT =	Blanco	White	Blanc	Weiß	Bianco	白
g = GRY =	Gris	Grey	Gris	Grau	Grigio	灰
m = BRN =	Marrón	Brown	Marron	Braun	Marrone	棕
n = BLK =	Negro	Black	Noir	Schwarz	Nero	黑
na = ORG =	Naranja	Orange	Orange	Orange	Arancio	橙
r = RED =	Rojo	Red	Rouge	Rot	Rosso	红
rs = PNK =	Rosa	Pink	Rose	Rosa	Roseo	粉
ve = GRN =	Verde	Green	Vert	Grün	Verde	绿
vi = PRP =	Violeta	Purple	Violet	Violett	Viola	紫

12103338