Hornos Mixtos
Fours Mixtes
Combi Ovens
HeiBluftdämpfer
Forno Misti

Modelos:

HEI-20/11
HEM-20/11
HEP-20/11

Diciembre 2007 December

FAGOR

Fagor Industrial

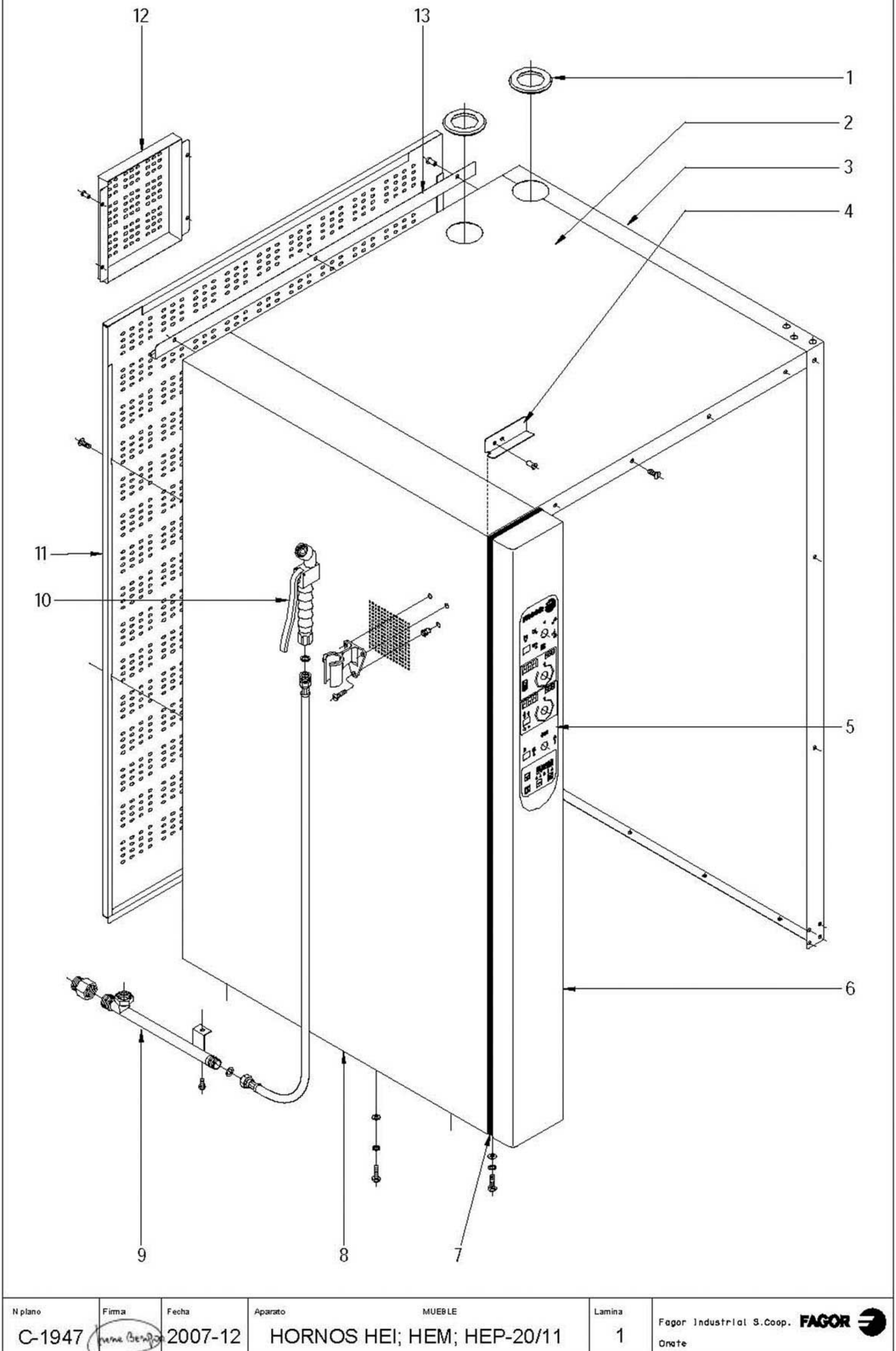

N plano	Firma	Fecha	Aparato		Lamina	
C-1947	Irene Berrojo	2007-12	MUEBLE HORNOS HEI; HEM; HEP-20/11		1	Fagor Industrial S.Coop. Onate

MOD.	HORNOS	ZONA	MUEBLE	PLANO	C-1947

ITEM	CODIGO	DENOMINACION	TEXTO	HEI 20/11	HEM 20/11	HEP 20/11					NOTAS
1	R662813000	PASAMUROS CHIMENEA 101003361	FEEDTHROUGH FLUE PIPE 1010	2	2	2					
2	R092880000	PANEL SUPERIOR 20/11	UPPER PANEL	1	1	1					
	Q221343000	REMACHE EXAGONAL M6	HEXAGONAL RIVET M.6	4	4	4					
	Q232040000	ARANDELA A6	FLAT WASHER A.6	4	4	4					
	Q262040000	ARANDELA GROW. A6 A.304	GROWER WASHER A.6	4	4	4					
	Q012042000	TORNILLO EXAGONAL M6x15	HEXAGONAL BOLT M6x15	4	4	4					
3	R092879000	PANEL LATERAL DERECHO 20/11	RIGHT SIDE PANEL	1	1	1					
	Q012042000	TORNILLO EXAGONAL M6x15	HEXAGONAL BOLT M6x15	4	4	4					
	Q262040000	ARAND.GROW. A6 A.304	GROWER WASHER A.6	4	4	4					
	Q232040000	ARANDELA A6	FLAT WASHER A.6	4	4	4					
4	R662811000	FIJACION PORTAMANDOS	CONTROL PANEL FIXATION	1	1	1					
	Q412002000	REMACHE AVINOX Ø4x10MM	TUBULAR RIVET 4x7,5	2	2	2					
5	R703042000	SERIGRAFIA HEI-10/11	SERIGRAPHY HEI-10 / 11	1	_	_					
5	R673067000	SERIGRAFIA HEM-10/11 20/11	SERIGRAPHY HEM-10/11 20/11	_	1	_					
5	R673068000	SERIGRAFIA HEP-10/11 20/11	SERIGRAPHY HEP-10/11 20/11	_	_	1					
6	T102817000	PANEL PORTAMANDOS HGC-20/11	CONTROL PANEL	1	_	_					
6	R092867000	PORTAMANDOS COMPLETO 20/11	COMPLETE CONTROL HOLDER 2	_	1	1					
7	3715400000	JUNTA PANEL PORTAMANDOS	SEAL CONTROL HOLDER PANEL	3	3	3					
8	R092870000	PANEL LATERAL IZDO 20/11	LEFT SIDE PANEL 20/11	1	1	1					
	Q012042000	TORNILLO EXAGONAL M6x15	HEXAGONAL BOLT M6x15	4	4	4					
	Q262040000	ARAND.GROW. A6 A.304	GROWER WASHER A.6	4	4	4					
	Q232040000	ARANDELA A6	FLAT WASHER A.6	4	4	4					
9	R675002000	SUPLEMENTO DUCHA	SUPPLEMENT FOR SHOWER SE	_	1	1					
	Q306039000	ARANDELA JUNTA 23,8X16,2X1,5	JOINT WASHER 23,8x16,2x1,5	_	1	1					
	Q012042000	TORNILLO EXAGONAL M6x15	HEXAGONAL BOLT M6x15	_	1	1					
10	R095009000	DUCHA COMPLETA	COMPLETE SHOWER	_	1	1					
	Q042022000	TORNILLO AVELLANADO M4x15	COUNTERSUNK SCREW M.4x15	_	3	3					
11	R092869000	PANEL POSTER. EXT. HEM/P 20/11	EXT. REAR PANEL HEM/P 20/11	1	1	1					
	Q152017000	TORNILLO AMARRE M6X13 A304	SCREW M.6x13	4	4	4					
	Q221343000	REMACHE EXAGONAL M6	HEXAGONAL RIVET M.6	4	4	4					

MOD.	HORNOS	ZONA	MUEBLE	PLANO	C-1947

ITEM	CODIGO	DENOMINACION	TEXTO	HEI 20/11	HEM 20/11	HEP 20/11					NOTAS
12	R092822000	TAPA VENTILACION MOTOR	FAN MOTOR COVER	2	2	2					
	Q221342000	REMACHE EXAGONAL M5	HEXAGONAL RIVET M.5	8	8	8					
13	R672811000	CANALETA RECOGEAGUAS	REAR DRIP COLLECTOR	1	1	1					
	Q412002000	REMACHE AVINOX Ø4x10MM	TUBULAR RIVET 4x7,5	3	3	3					

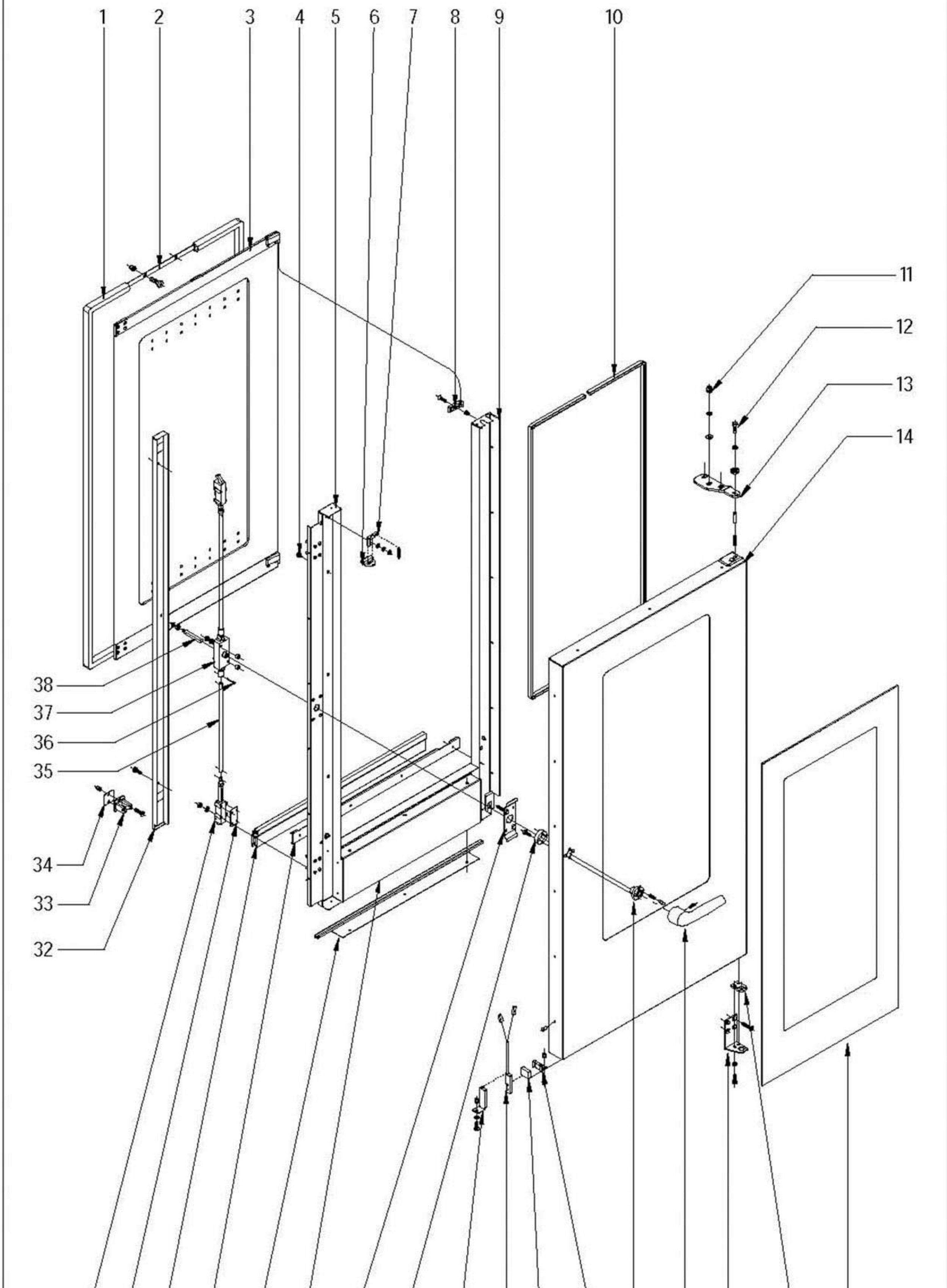

N plano	Firma	Fecha	Aparato		Lamina	
C-1948		2007-12	PUERTA HORNOS HEI; HEM; HEP-20/11		2	Fagor Industrial S.Coop. Oñate

MOD.	HORNOS	ZONA	PUERTA	PLANO	C-1948

ITEM	CODIGO	DENOMINACION	TEXTO	HEI 20/11	HEM 20/11	HEP 20/11					NOTAS
	1100003126	**KIT PUERTA 20/11 COMPL.**	DOOR 20/11 KIT	**1**	**1**	**1**					
1	R090510000	JUNTA DE PUERTA 20-11	DOOR JOINT	1	1	1					
2	R090512000	FIJACION JUNTA COMP 20/11	COMPLETE FIXATION JOINT	1	1	1					
	Q032021000	TORN.ALOM.M4X10	CURVED SCREW M.4x10	40	40	40					
	Q222041000	REMACHE EXAGONAL M4 (INOX)	HEXAGONAL RIVET M.4	40	40	40					
3	**1100003125**	**KIT CRISTAL INTER. 20/11 COMPL.**	20/11 INNER GLASS KIT	**1**	**1**	**1**					
4	T300513000	TOPE CRISTAL INTERIOR 10/21	INNER GLASS DOOR STOP	8	8	8					
5	R090569000	CONTRAP MANILLA COMPL 20/11	COMPLETE HANDLE DOOR 20/11	1	1	1					
6	T300514000	PESTILLO 10/21	INNER GLASS FASTENING LATCI	2	2	2					
7	R090558000	BASE DE PESTILLO	LATCH BASE	2	2	2					
	Q302022000	ARANDELA 16X6X1.2 A.304	FLAT WASHER 16x6x1,2	2	2	2					
	Q162040000	TUERCA EXAGONAL M6	HEXAGONAL NUT M.6	2	2	2					
	Q242040000	ARANDELA ABANICO A6 A.304	FAN SHAPED WASHER A.6	2	2	2					
	R660605000	MUELLE TENSOR	LATCH TENSOR SPRING	2	2	2					
8	R670615000	BASE DE BISAGRA	HINGE BASE	2	2	2					
	Q222011000	REMACHE EXAGONAL M.5	HEXAGONAL RIVET M.5	2	2	2					
	Q042032000	TORNILLO AVELLANADO M5X15	COUNTERSUNK SCREW M.5x15	2	2	2					
9	R090567000	CONTRAPUERTA BISA COMP 20/11	COMP. HINGE DOOR REVERSE 2	1	1	1					
10	3715200000	JUNTA CRISTAL	WINDOW SEAL	1	1	1					
11	Q212051000	TUERCA SOMBRERETE M8	CAP NUT M.8	3	3	3					
	Q242050000	ARANDELA ABANICO A8 A.304	FAN SHAPED WASHER A.8	3	3	3					
	Q302025000	ARANDELA 8,4x20x1,5 A.304	FLAT WASHER 8,4x20x1,5	3	3	3					
12	Q012042000	TORNILLO EXAGONAL M6x15	HEXAGONAL BOLT M6x15	1	1	1					
	Q242040000	ARANDELA ABANICO A6 A.304	FAN SHAPED WASHER A.6	1	1	1					
	R662807000	ARANDELA AMARRE	DOOR ANCHORING WASHER	1	1	1					
13	T300520000	BISAGRA SUPERIOR	UPPER HINGE	1	1	1					
	R660534000	EJE SUPERIOR	UPPER SHAFT	1	1	1					
	Z850519000	RESORTE 06329	SPRING	1	1	1					
14	R090565000	PUERTA COMPLETA 20-11	COMPLETE DOOR	1	1	1					
	Q412002000	REMACHE AVINOX Ø4x10MM	TUBULAR RIVET 4x7,5	14	14	14					
15	R090562000	CRISTAL EXTERIOR 20/11	EXTERNAL GLASS	1	1	1					

MOD.	HORNOS	ZONA	PUERTA	PLANO	C-1948

ITEM	CODIGO	DENOMINACION	TEXTO	HEI 20/11	HEM 20/11	HEP 20/11					NOTAS
16	R660549000	GUIA EJE INFERIOR FUNDIDO	LOWER SHAFT GUIDE	1	1	1					
	Q062040000	TORNILLO AVELLANADO M6X16	COUNTERSUNK SCREW M.6x16	4	4	4					
17	R090561000	BISAGRA INFERIOR PLEGADA	LOWER FOLDER HINGE	1	1	1					
	Q242040000	ARANDELA ABANICO A6 A.304	FAN SHAPED WASHER A.6	2	2	2					
	Q012041000	TORNILLO EXAGONAL M6x10 A304	HEXAGONAL SCREW M.6x10	2	2	2					
18	T130502000	MANILLA COMPLETA	HANDLE	1	1	1					
	Q132042000	VARILLA ROSCADA M6X15	THREADED ROD M.6x15	1	1	1					
	T130510000	TAPON Ø 16 BAGAL Ext.	COVER Ø 16 BAGAL Ext.	1	1	1					
19	T130515000	GUIA MANILLA	HANDLE GUIDE	1	1	1					
	T490518000	PITON ENGANCHE PUERTA	DOOR FASTENER SPIKE	2	2	2					
	T130506000	RESORTE 34548	SPRING	2	2	2					
20	T300525000	SOPORTE IMAN	MAGNET HOLDER	1	1	1					
	Q222011000	REMACHE EXAGONAL M.5	HEXAGONAL RIVET M.5	1	1	1					
	Q032031000	TORNILLO ALOMADO M5X10	CURVED SCREW M.5x10	1	1	1					
21	T300526000	IMAN	MAGNET	1	1	1					
22	Z100522000	INTERRUPTOR MAGNETICO	MAGNETIC SWITCH (DOOR)	1	1	1					
23	T302819000	SOPORTE MICRO PUERTA	DOOR MAGNETIC SWITCH HOLD	1	1	1					
	Q222011000	REMACHE EXAGONAL M.5	HEXAGONAL RIVET M.5	1	1	1					
	Q242030000	ARANDELA ABANICO A5 A.304	FAN SHAPED WASHER A.5	1	1	1					
	Q152004000	TORNIL. APLASTADO M5X13 A 304	FLAT SCREW M.5x13	1	1	1					
24	T130514000	SOPORTE RESORTE	SPRING HOLDER	1	1	1					
	Q032032000	TORNILLO ALOMADO M5x15	CURVED SCREW M.5x15	2	2	2					
25	T130511000	SUPLEMENTO SUJ. CERRADURA	LOCK FIXING SUPPLEMENT	1	1	1					
26	R090570000	CHAPA AMARRE CONTRAP 20/11	DOOR REVERSE PLATE FASTEN	1	1	1					
27	R090571000	SUPERIOR CIERRE PUERTA 20/11	DOOR UPPER LOCK 20/11	1	1	1					
28	R090553000	CHAPA JUNTA CONTRAPUERTA	DOOR REVERSE SEAL PLATE	1	1	1					
29	R090551000	JUNTA CIERRE INFERIOR 20/11	SEAL LOWER LOCK 20/11	1	1	1					
30	T080503000	SUPLEMENTO ELEMENTO CIERRE	CLOSING ELEMENT SUPPLEMEN	6	6	6					
31	T080504000	ELEMENTO CIERRE	CLOSING COMPONENT	2	2	2					
	Q262040000	ARAND.GROW. A6 A.304	GROWER WASHER A.6	8	8	8					
	Q162040000	TUERCA EXAGONAL M6	HEXAGONAL NUT M.6	8	8	8					

MOD.	HORNOS	ZONA	PUERTA	PLANO	C-1948

ITEM	CODIGO	DENOMINACION	TEXTO	HEI 20/11	HEM 20/11	HEP 20/11					NOTAS
32	R090557000	TAPA CIERRE PUERTA 20/11	DOOR LOCK COVER 20/11	1	1	1					
	Q032021000	TORNILLO ALOMADO M4X10	CURVED SCREW M.4x10	4	4	4					
	Q222041000	REMACHE EXAGONAL M4 (INOX)	HEXAGONAL RIVET M.4	4	4	4					
33	T110506000	ENGANCHE PUERTA	FASTENER	2	2	2					
	Q043145000	TORN. AVELLANADO 6X30 LATON	BOLT, BRASS COUNTERSUNK 6X	4	4	4					
34	R660538000	CALZO DE ENGANCHE	COUPLING CHOCK	6	6	6					
	Q221343000	REMACHE EXAGONAL M.6	HEXAGONAL RIVET M.6	4	4	4					
35	R090514000	TUBO ALARGADERA 20-11/20-21	ROD	2	2	2					
36	Q352001000	PASADOR DE ALETAS 2X20	COTTER PIN 2x15	4	4	4					
37	T130509000	MECANISMO CIERRE	CLOSING MECHANISM	1	1	1					
	Q262040000	ARAND.GROW. A6 A.304	GROWER WASHER A.6	2	2	2					
	Q162040000	TUERCA EXAGONAL M6	HEXAGONAL NUT M.6	2	2	2					
	Z608410000	CASQUILLO AMARRE TECLADO	COLLAR	2	2	2					
38	T490519000	EJE DE MANILLA PUERTA	DOOR HANDLE SHAFT	1	1	1					
	T130505000	CASQUILLO	BUSHING	1	1	1					

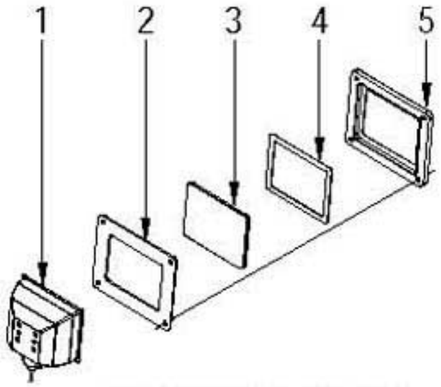

DETALLE DE LAMPARA

N plano	Firma	Fecha	Aparato	Lamina	
C-1949		2007-12	MUEBLE INTERIOR HORNOS HEI; HEM; HEP-20/11	3	Fagor Industrial S.Coop. FAGOR Oñate

MOD.	HORNOS	ZONA	MUEBLE INTERIOR	PLANO	C-1949

ITEM	CODIGO	DENOMINACION	TEXTO	HEI 20/11	HEM 20/11	HEP 20/11					NOTAS
1	T303023000	PORTALAMPARAS	LAMP HOLDER	2	2	2					
2	T303026000	JUNTA EXTERIOR LAMPARA	LAMP OUTER JOINT	2	2	2					
3	T303025000	CRISTAL LAMPARA	LAMP GLASS	2	2	2					
4	T303027000	JUNTA INTERIOR LAMPARA	LAMP INNER JOINT	2	2	2					
5	T303047000	MARCO LAMPARA	LAMP ANCHORING PLATEN	2	2	2					
	R663013000	LAMPARA 10W-12V	LIGHT 10W 12V	2	2	2					
	Q222041000	REMACHE EXAGONAL M.4 INOX	HEXAGONAL RIVET M.4	8	8	8					
	Q032021000	TORNILLO ALOMADO M4X10	CURVED SCREW M.4x10	8	8	8					
6	R092652000	SOPORTE AISLANTE POST. 20/11	REAR INSULATION SUPPORT	1	1	1					
	Q221343000	REMACHE EXAGONAL M.6	HEXAGONAL RIVET M.6	12	12	12					
	Q232040000	ARANDELA A6	FLAT WASHER A.6	24	24	24					
	Q262040000	ARAND.GROW. A6 A.304	GROWER WASHER A.6	24	24	24					
	Q012042000	TORNILLO EXAGONAL M6x15	HEXAGONAL BOLT M6x15	24	24	24					
7	R662614000	AISLANTE 650X650X20	BASE&ROOF INSULATION 650x65	6	6	6					
8	T133036000	BASE SUJECION SONDA	FIXING CORE PROBE	_	1	1					
9	R092622000	AISLANTE 1370X650X20	INSULATION 1370X650X20	5	5	5					
10	T133037000	TAPA SUJECION SONDA	COVER CORE PROBE	_	1	1					
11	R092644000	CUERPO INTERIOR HEI-20/11	INNER BODY HEI-20/11	1	_	_					
11	R092640000	CUERPO INTERIOR HEM-20/11	INNER BODY HEM-20/11	_	1	1					
	R662636000	REFUERZO BASE 2011	BASE REINFORCEMENT 2011	1	1	1					
	Q162040000	TUERCA EXAGONAL M6	HEXAGONAL NUT M.6	8	8	8					
12	R092683000	SEPARADOR CENTRAL 20-11E	CENTRAL REPARATOR 20-11E	1	1	1					
	Q232040000	ARANDELA A6	FLAT WASHER A.6	2	2	2					
	Q262040000	ARAND.GROW. A6 A.304	GROWER WASHER A.6	2	2	2					
	Q162040000	TUERCA EXAGONAL M6	HEXAGONAL NUT M.6	2	2	2					
13	T322606000	REDUCC. CUBREVENT. 60HzD160	FANCOVER REDUC. 60HzD160	2	2	2					SOLO HORNOS A 60 HZ
14	R092680000	FIJACIÓN SUPLEMENTO DOBLE	DOUBLE SUPLEMENT ATTACHN	2	2	2					
	Q412002000	REMACHE AVINOX Ø4x10MM	TUBULAR RIVET 4x7,5	8	8	8					
15	R092677000	ESCUADRA SUJECCION	FASTENING BRACKET	2	2	2					
	Q412002000	REMACHE AVINOX Ø4x10MM	TUBULAR RIVET 4x7,5	4	4	4					

MOD.	HORNOS	ZONA	MUEBLE INTERIOR	PLANO	C-1949

ITEM	CODIGO	DENOMINACION	TEXTO	HEI 20/11	HEM 20/11	HEP 20/11					NOTAS
16	T302643000	FIJACIÓN SUPLEMENTO	FAN COVER SUPPLEMENT BINDI	8	8	8					
	Q412002000	REMACHE AVINOX Ø4x10MM	TUBULAR RIVET 4x7,5	16	16	16					
17	T132644000	2011G SUPL. CUBREVENTILADOR	2011G SUPPL. FAN COVER	2	2	2					
18	T302643000	FIJACIÓN SUPLEMENTO	FAN COVER SUPPLEMENT BINDI	2	2	2					
	Q412002000	REMACHE AVINOX Ø4x10MM	TUBULAR RIVET 4x7,5	4	4	4					
19	R092643000	CUBREVENTILADOR 20/11E	FAN COVER 20/11E	1	1	1					
	Q412002000	REMACHE AVINOX Ø4x10MM	TUBULAR RIVET 4x7,5	23	23	23					
20	R092682000	FILTRO DESAGÜE	DRAINAGE FILTER	1	1	1					
	Q232030000	ARANDELA A5	FLAT WASHER A.5	1	1	1					
	Q162030000	TUERCA EXAGONAL M5	HEXAGONAL NUT M.5	1	1	1					
21	T132831000	REFUERZO APOYOS COMP.20/11	COMP.SUPPORT REINFORCEMB	1	1	1					
	Q412002000	REMACHE AVINOX Ø4x10MM	TUBULAR RIVET 4x7,5	24	24	24					
22	R092878000	BASE EXTERIOR DE HORNO 20/11	OVEN OUTER BASE 20/11	1	1	1					
23	T132610000	SOPORTE LATER. AISLANTE 20/11	SIDE SUPPORT INSULATION 20/	1	1	1					
24	R092830000	PATA REF. AA179EOAQ47CCN	REGULABLE LEG	4	4	4					
	Q221343000	REMACHE EXAGONAL M6	HEXAGONAL RIVET M.6	16	16	16					
	Q242040000	ARANDELA ABANICO A6 A.304	FAN SHAPED WASHER A.6	16	16	16					
	Q012042000	TORNILLO EXAGONAL M6x15	HEXAGONAL BOLT M6x15	16	16	16					
25	R092693000	FIJACION PANEL LATERAL	SIDE PANEL ATTACHMENT	1	1	1					
	Q412002000	REMACHE AVINOX Ø4x10MM	TUBULAR RIVET 4x7,5	3	3	3					
26	R092672000	REFUERZO PEDESTAL	PEDESTAL REINFORCEMENT	2	2	2					
	Q412002000	REMACHE AVINOX Ø4x10MM	TUBULAR RIVET 4x7,5	8	8	8					
27	R342802000	GUIA CUADRO ELECTRICO "	SWITCHBOARD GUIDE"	1	1	1					
28	R092670000	PROTECTOR PORTAMANDOS	CONTROL HOLDER PROTECTOR	1	1	1					
	Q412002000	REMACHE AVINOX Ø4x10MM	TUBULAR RIVET 4x7,5	6	6	6					
29	R092624000	AISLANTE 670X400X20	CENTRAL INSULATOR 670x400x	1	1	1					
30	R662616000	AISLANTE 560X60X20	REAR INSULATION 560x60x20	6	6	6					
31	R672631000	AISLANTE 670X200X20	INSULATION 670x230x20	2	2	2					

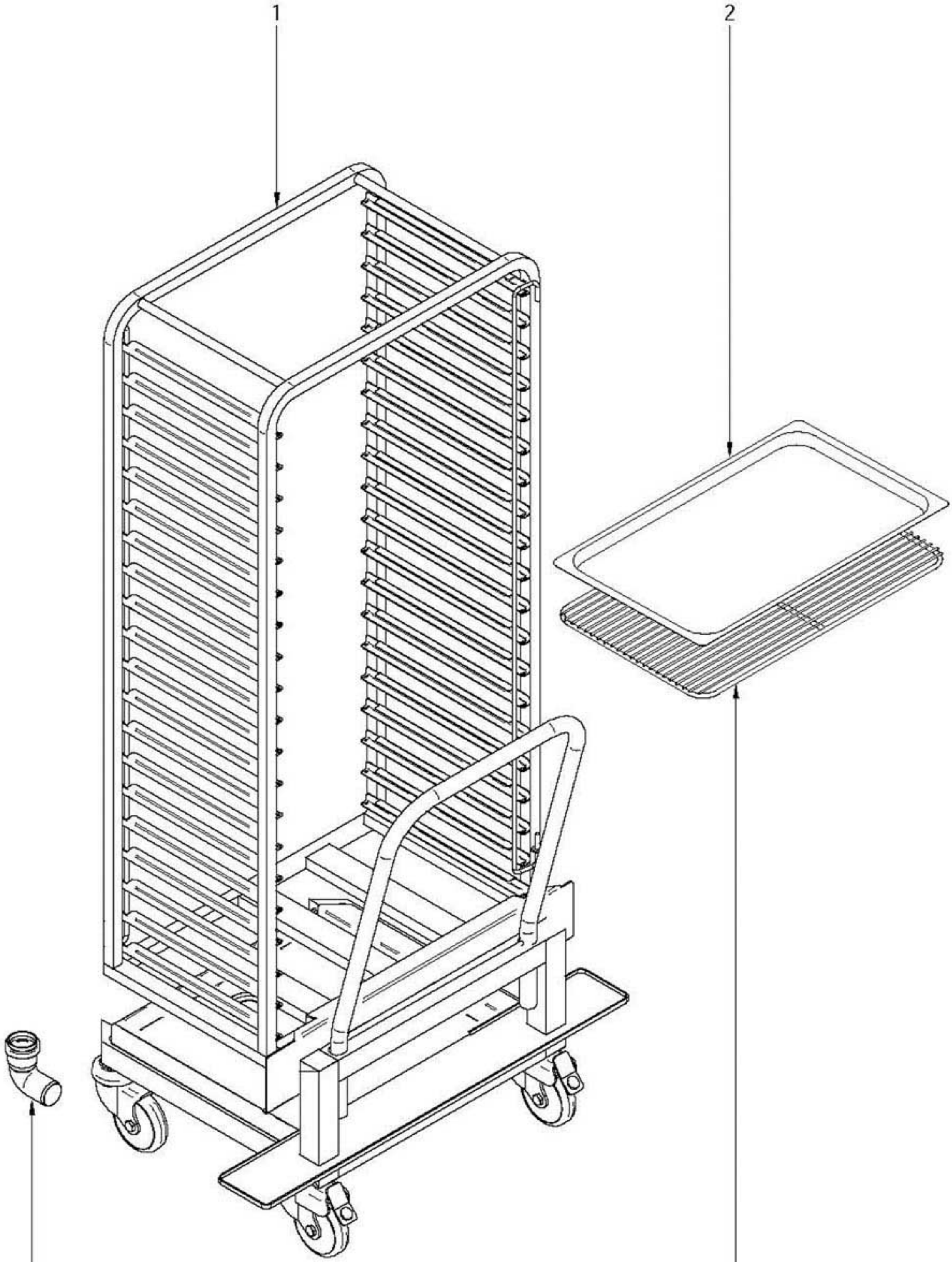

N plano	Firma	Fecha	Aparato		Lamina	
C-1950		2007-12	CARRO HORNOS HEI; HEM; HEP-20/11		4	Fagor Industrial S.Coop. Onate

MOD.	HORNOS	ZONA	CARRO	PLANO	C-1950

ITEM	CODIGO	DENOMINACION	TEXTO	HEI 20/11	HEM 20/11	HEP 20/11					NOTAS
1	R092857000	CARRO 20/11	TROLLEY 20/11	1	1	1					
2	R252816000	BANDEJA 1/1 P:20	TRAY GN-1/1 h=20	1	1	1					
3	R672665000	PARRILLA 1X1 (REF. 2025201)	GRILLE 1X1 (REF. 2025201)	1	1	1					
4	T492853000	CODO DESAGÜE CARRO 20/21	TROLLEY DRAINAGE L-BEND 20/	1	1	1					

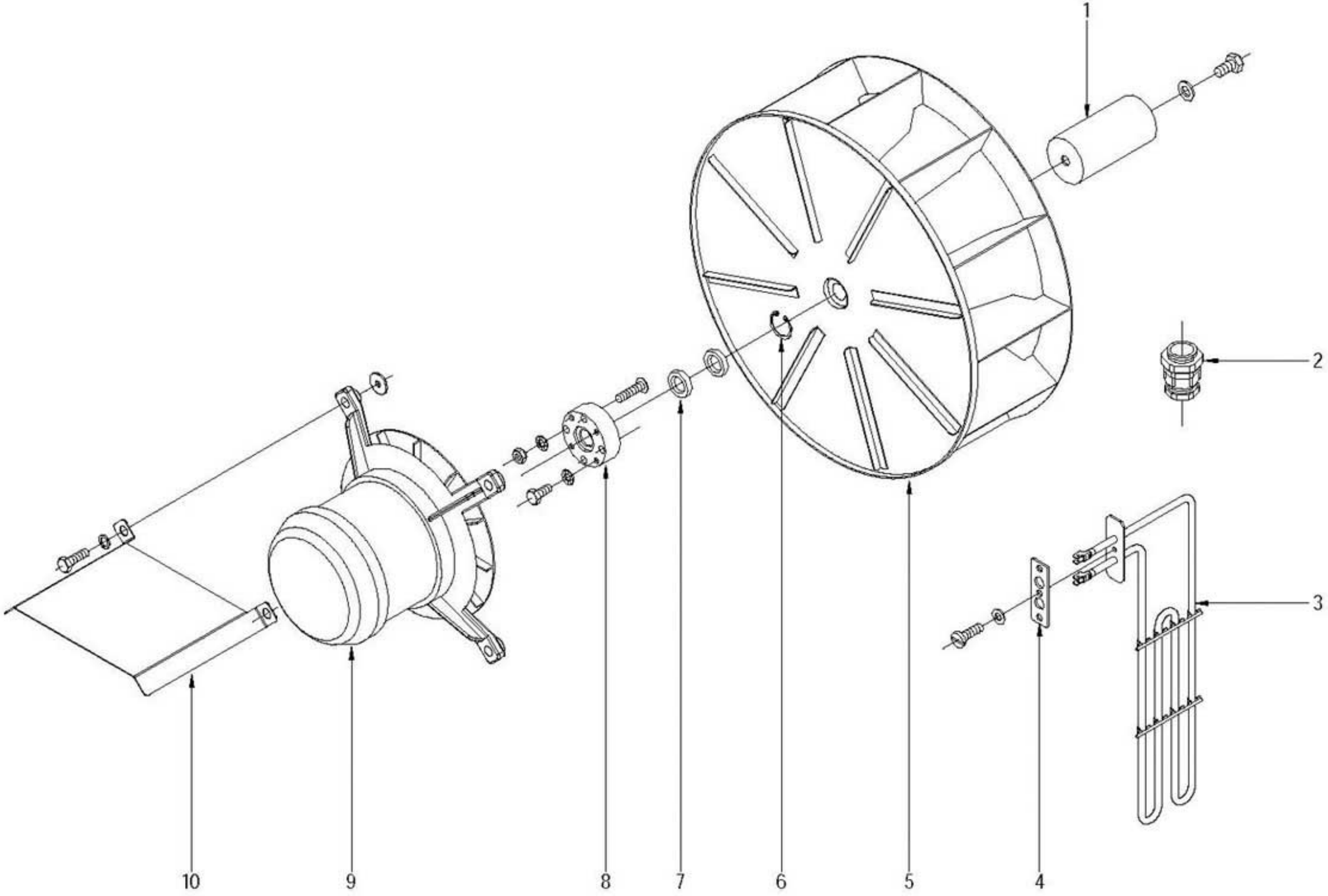

N plano	Firma	Fecha	Aparato		Lamina	
C-1951		2007-12	TUREINA HORNO HEI 20/11		5	Fagor Industrial S.Coop. Onate

MOD.	HORNOS	ZONA	TURBINA	PLANO	C-1951

ITEM	CODIGO	DENOMINACION	TEXTO	HEI 20/11							NOTAS
1	R665025000	DISTRIBUIDOR INYECTOR	INJECTION DISTRIBUTOR	2							
2	R033002000	PRENSA ESTOPAS	WIRES PROTECTION	1							
3	R093002000	RESISTENCIA CONVECCION 23	ELEMENT 2000+2000W 230V	6							
4	R673063000	JUNTA RESISTENCIAS 10-11	ELEMENT SEAL 10-11	6							
	Q232040000	ARANDELA A6	FLAT WASHER A.6	18							
	Q242040000	ARANDELA ABANICO A6 A.304	FAN SHAPED WASHER A.6	18							
	Q012042000	TORNILLO EXAGONAL M6x15	HEXAGONAL BOLT M6x15	18							
5	R703050000	TURBINA REC D350X127 HANNING	TURBINE REC D350X127 HANNIN	2							
	R763010000	ARANDELA SEGURIDAD HANNING	HANNING SAFETY WASHER	2							
	Q012063000	TORNIL. EXAGONAL M10X20 A.304	HEXAGONAL SCREW M.10x20	2							
6	Q302023000	ANILLO DE SEGURIDAD D 28X1.2	SAFETY RING 28x1,2	2							
7	R662627000	RETEN 17X28X7V	RETAINER 28x17x7	4							
8	R662684000	CASQUILLO RETEN	SEAL BUSHING	2							
	R662685000	JUNTA CASQUILLO RETEN	SEAL BUSHING GASKET	2							
	Q262040000	ARANDELA GROW. A6 A.304	GROWER WASHER A.6	8							
	Q162040000	TUERCA EXAGONAL M6	HEXAGONAL NUT M.6	8							
	Q232040000	ARANDELA A6	FLAT WASHER A.6	8							
	Q262040000	ARANDELA GROW. A6 A.304	GROWER WASHER A.6	8							
	Q162040000	TUERCA EXAGONAL M6	HEXAGONAL NUT M.6	8							
9	R703049000	MOTOR DOBLE GIRO 1VEL.450W.	DOUBLE ROTATION MOTOR 1VE	2							
	Q012046000	TORN.EXA. M6X40 A.304	HEXAGONAL SCREW M.6x40	8							
	Q242050000	ARANDELA ABANICO A8 A.304	FAN SHAPED WASHER A.8	8							
	Q162050000	TUERCA EXAGONAL M8x1 INOX.	HEXAGONAL NUT M.8x1	8							
10	T142635000	TEJADILLO MOTOR	MOTOR ROOF	2							

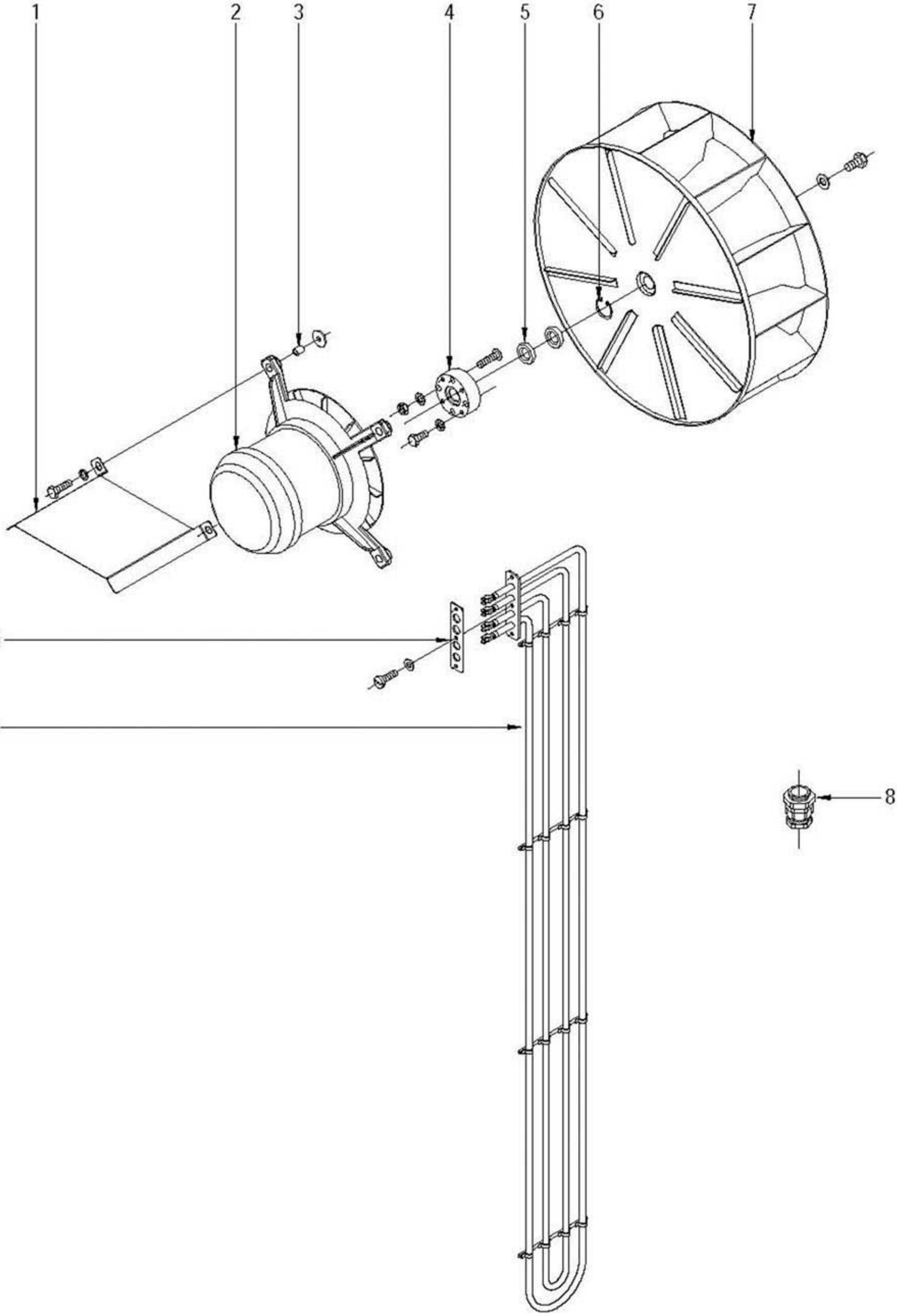

N plano	Firma	Fecha	Aparato	Lamina	
C-1952		2007-12	TURBINA HORNOS HEM; HEP-20/11	6	Fagor Industrial S.Coop. FAGOR Onate

MOD.	HORNOS	ZONA	TURBINA	PLANO	C-1952

ITEM	CODIGO	DENOMINACION	TEXTO	HEM 20/11	HEP 20/11						NOTAS
1	T142635000	TEJADILLO MOTOR	MOTOR ROOF	2	2						
2	T493003000	MOTOR 20/21 2V 400V	MOTOR 20/21 2 SPEED 400V	2	2						
2	T493004000	MOTOR 20/21 2V 230V.	MOTOR 20/21 2V 230V.	2	2						
	Q012046000	TORN.EXA. M6X40 A.304	HEXAGONAL SCREW M.6x40	8	8						
	Q242050000	ARANDELA ABANICO A8 A.304	FAN SHAPED WASHER A.8	8	8						
	Q162050000	TUERCA EXAGONAL M8x1 INOX.	HEXAGONAL NUT M.8x1	8	8						
3	R663057000	CASQUILLO AMARRE MOTOR	CAP RETAINER	8	8						
	Q301304000	ARANDELA PLANA 23X6.5X2	FLAT WASHER 23X6.5X2	8	8						
4	R662684000	CASQUILLO RETEN	SEAL BUSHING	2	2						
	R662685000	JUNTA CASQUILLO RETEN	SEAL BUSHING GASKET	2	2						
	Q262040000	ARANDELA GROW. A6 A.304	GROWER WASHER A.6	8	8						
	Q162040000	TUERCA EXAGONAL M6	HEXAGONAL NUT M.6	8	8						
	Q232040000	ARANDELA A6	FLAT WASHER A.6	8	8						
	Q262040000	ARANDELA GROW. A6 A.304	GROWER WASHER A.6	8	8						
	Q162040000	TUERCA EXAGONAL M6	HEXAGONAL NUT M.6	8	8						
5	R662627000	RETEN 17X28X7V	RETAINER 28x17x7	4	4						
6	Q302023000	ANILLO DE SEGURIDAD D 28X1.2	SAFETY RING 28x1,2	2	2						
7	T493017000	TURBINA RECTA D350X127 FIR	STRAIGHT FAN D350X127 FIR	2	2						
	R763010000	ARANDELA SEGURIDAD HANNING	HANNING SAFETY WASHER	2	2						
	Q012063000	TORNIL. EXAGONAL M10X20 A.304	HEXAGONAL SCREW M.10x20	2	2						
8	R033002000	PRENSA ESTOPAS	WIRES PROTECTION	1	1						
9	R093002000	RESISTENCIA CONVECCION 23	ELEMENT 2000+2000W 230V	6	6						
10	R673063000	JUNTA RESISTENCIAS 10-11	ELEMENT SEAL 10-11	6	6						
	Q232040000	ARANDELA A6	FLAT WASHER A.6	18	18						
	Q242040000	ARANDELA ABANICO A6 A.304	FAN SHAPED WASHER A.6	18	18						
	Q012042000	TORNILLO EXAGONAL M6x15	HEXAGONAL BOLT M6x15	18	18						

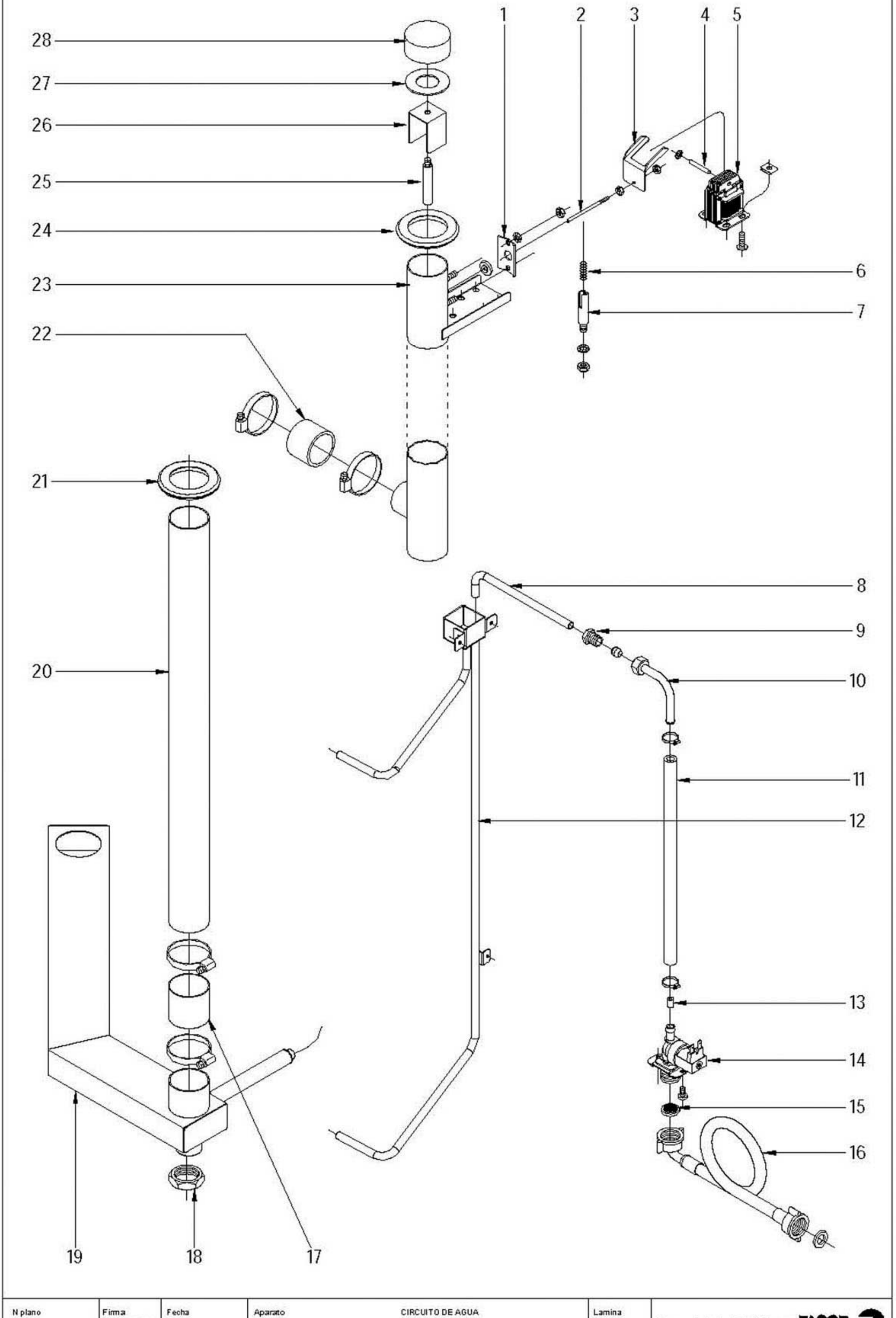

N plano	Firma	Fecha	Aparato	Lamina	
C-1953		2007-12	CIRCUITO DE AGUA HORNO HEI 20/11	7	Fagor Industrial S.Coop. Oñate

MOD.	HORNOS	ZONA	CIRCUITO DE AGUA	PLANO	C-1953

ITEM	CODIGO	DENOMINACION	TEXTO	HEI 20/11							NOTAS
1	T115105000	AMARRE CONDUCCION VAHOS	VAPOUR DUCT FASTENING	1							
	R675033000	JUNTA PALANCA ACCIONAMIENTO	JOINT	1							
	Q242030000	ARANDELA ABANICO A5 A.304	FAN SHAPED WASHER A.5	2							
	Q162030000	TUERCA EXAGONAL M5	HEXAGONAL NUT M.5	2							
2	R675014000	PALANCA ACCIONAMIENTO	MOVING ROD	1							
3	R672640000	ESCUADRA ACCIONAMIENTO	MOVING STEEL ANGLE	1							
	Q162020000	TUERCA EXAGONAL M4	HEXAGONAL NUT M.4	2							
	Q242020000	ARANDELA ABANICO A4 A.304	FAN SHAPED WASHER A.4	1							
4	R675016000	PASADOR ELECTROIMAN	PIN	1							
5	R663030000	ELECTROIMAN JOVE TIPO 501	ELECTROMAGNETIC	1							
	Q221009000	TUERCA RAPIDA SEGURID. AC.RE	NUT M.5	2							
	Q152004000	TORNILLO APLAST. M5X13 A 304	FLAT SCREW M.5x13	2							
6	Z883001000	RESORTE 20153	SPRING	1							
7	R665027000	GUIA RESORTE	PIN	1							
	Q242040000	ARANDELA ABANICO A6 A.304	FAN SHAPED WASHER A.6	1							
	Q162040000	TUERCA EXAGONAL M6	HEXAGONAL NUT M.6	1							
8	R095010000	TUBO ENTRADA INYECTOR	INJECTOR INPUT PIPE	1							
9	R695003000	MANGUITO CIERRE	CLOSING SLEEVE	1							
	R695004000	BICONO	BICONE	1							
10	R695017000	TUBO CONDUCCION AGUA	COMPLETE WATER CONDUCTIO	1							
11	3676900000	TUBO GOMA NEGRA Ø17*10	BLACK RUBBER PIPE Ø17*10	1							
	Q881302000	ABRAZADERA ELASTICA 12*20	CLAMP 12-20	2							
12	R095013000	INYECTOR COMPLETO HEI 20/11	COMPLETE INJECTOR HEI 20/11	1							
	Q412002000	REMACHE AVINOX Ø4x10MM	TUBULAR RIVET 4x7,5	3							
13	R665041000	REGULADOR 0,25L. ROJO	FLOW REGULATOR 0,25 l/min (PI	1							
14	Z701135000	E.V.SIMP.220V COD.255.208	INLET VALVE 230 V.	1							
	Q032021000	TORNILLO ALOMADO M4x10	CURVED SCREW M.4x10	4							
15	Z701132000	FILTRO DE JUNTA N-3	FILTER JOINT	1							
16	Z601114000	MANGUERA ENTRADA AGUA	WATER INLET HOSE	1							
17	R345020000	TUBO EMPALME GENERADOR	GENERATOR COUPLING TUBING	1							
	Q881307000	ABRAZADERA 40-60	CLAMP 40-60	2							

MOD.	HORNOS	ZONA	CIRCUITO DE AGUA	PLANO	C-1953

ITEM	CODIGO	DENOMINACION	TEXTO	HEI 20/11							NOTAS
18	Q223014000	CONTRATUERCA 1 LATON	LOCK NUT 1 PUL	1							
19	----------	TUBO DESA. (CUERPO INTERIOR)	DRAIN PIPE. (INNER BODY)	1							
20	R095014000	CHIMENEA COMPLETA 20/11E	CHIMNEY	1							
21	R662813000	PASAMUROS CHIMENEA 101003361	FEEDTHROUGH FLUE PIPE 1010	1							
22	3715800000	TUBO SILICONA Ø43*51	SILICONE TUBE Ø43*51	1							
	Q881307000	ABRAZADERA 40-60	CLAMP 40-60	2							
23	R695008000	CONJUNTO CHIMENEA HMI	COMPLETE CHIMNEY	1							
24	R662813000	PASAMUROS CHIMENEA 101003361	FEEDTHROUGH FLUE PIPE 1010	1							
25	R675008000	UNION RETENCION VAPORES	MOVING ROD CHIMNEY	1							
26	R675005000	GUIA RETENCION VAPORES	MOVING GUIDE	1							
27	R675007000	JUNTA RETENCION VAPORES	RUBBER SEAL	1							
28	R675006000	RETENCION DE VAPORES	CLOSE CHIMNEY	1							

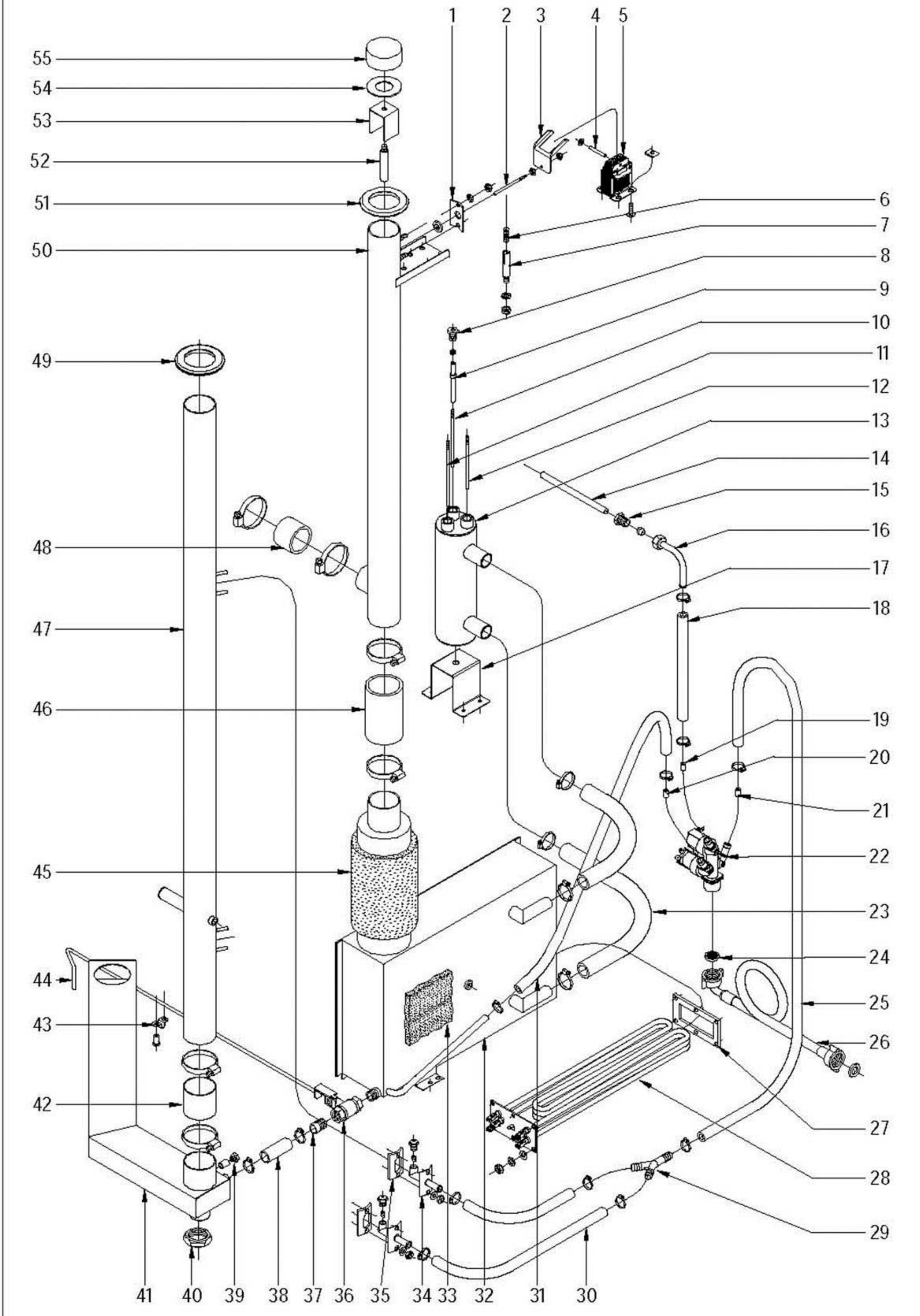

N plano	Firma	Fecha	Aparato	Lamina	
C-1954		2007-12	CIRCUITO DE AGUA HORNOS HEM; HEP-20/11	8	Fagor Industrial S.Coop. FAGOR Onate

MOD.	HORNOS	ZONA	CIRCUITO DE AGUA	PLANO	C-1954

ITEM	CODIGO	DENOMINACION	TEXTO	HEM 20/11	HEP 20/11						NOTAS
1	T115105000	AMARRE CONDUCCION VAHOS	VAPOUR DUCT FASTENING	1	1						
	R675033000	JUNTA PALANCA ACCIONAMIENTO	JOINT	1	1						
	Q242030000	ARANDELA ABANICO A5 A.304	FAN SHAPED WASHER A.5	2	2						
	Q162030000	TUERCA EXAGONAL M5	HEXAGONAL NUT M.5	2	2						
2	R675014000	PALANCA ACCIONAMIENTO	MOVING ROD	1	1						
3	R672640000	ESCUADRA ACCIONAMIENTO	MOVING STEEL ANGLE	1	1						
	Q162020000	TUERCA EXAGONAL M4	HEXAGONAL NUT M.4	2	2						
	Q242020000	ARANDELA ABANICO A4 A.304	FAN SHAPED WASHER A.4	1	1						
4	R675016000	PASADOR ELECTROIMAN	PIN	1	1						
5	R663030000	ELECTROIMAN JOVE TIPO 501	ELECTROMAGNETIC	1	1						
	Q221009000	TUERCA RAPIDA SEGURID. AC.RE	NUT M.5	2	2						
	Q152004000	TORNILLO APLAST. M5X13 A 304	FLAT SCREW M.5x13	2	2						
6	Z883001000	RESORTE 20153	SPRING	1	1						
7	R665027000	GUIA RESORTE	PIN	1	1						
	Q242040000	ARANDELA ABANICO A6 A.304	FAN SHAPED WASHER A.6	1	1						
	Q162040000	TUERCA EXAGONAL M6	HEXAGONAL NUT M.6	1	1						
8	R345058000	RACORD	ELECTRODES ANCHORING ADAI	3	3						
	Q163020000	TUERCA EXAGONAL M4	HEXAGONAL NUT M.4	6	6						
9	R345059000	GUIA AISLANTE	ELECTRODE INSULATOR GUIDE	3	3						
10	R345063000	ELECTRODO NIVEL BAJO	LOW LEVEL ELECTRODE	1	1						
11	R345064000	ELECTRODO DE MASA	EARTH ELECTRODE L=131	1	1						
12	R345060000	ELECTRODO NIVEL ALTO	HIGH LEVEL ELECTRODE	1	1						
13	T325040000	CUERPO NIVELES COMPLETO	COMPLETE LEVELS BODY	1	1						
	Q232040000	ARANDELA A6	FLAT WASHER A.6	1	1						
	Q262040000	ARANDELA GROW. A6 A.304	GROWER WASHER A.6	1	1						
	Q162040000	TUERCA EXAGONAL M6	HEXAGONAL NUT M.6	2	2						
14	R665024000	TUBO CONDUCCION INYECTOR	INJECTOR CONDUCTION TUBINC	1	1						
15	R695003000	MANGUITO CIERRE	CLOSING SLEEVE	1	1						
	R695004000	BICONO	BICONE	1	1						
16	R695017000	TUBO CONDUCCION AGUA	COMPLETE WATER CONDUCTIO	1	1						
17	R025032000	CHAPA CUERPO NIVELES E102011	PLATE BODY LEVELS E102011	1	1						

MOD.	HORNOS	ZONA	CIRCUITO DE AGUA	PLANO	C-1954

ITEM	CODIGO	DENOMINACION	TEXTO	HEM 20/11	HEP 20/11						NOTAS
18	3676900000	TUBO GOMA NEGRA Ø17*10	BLACK RUBBER PIPE Ø17*10	1	1						
	Q881302000	ABRAZADERA ELASTICA 12*20	CLAMP 12-20	2	2						
19	R665041000	REGULADOR 0,25L. ROJO	FLOW REGULATOR 0,25 l/min (Pl	1	1						
20	P443042000	REGULADOR 3L. VERDE 254.023	FLOW REDUCER 3 l/min (BLACK)	1	1						
21	Z601156000	REGULADOR 8L RO. 254.034	FLOW REDUCER 8 l/min (RED)	1	1						
22	Z611123000	E.V. TRIPLE COD.255.641	ELECTROVALVE	1	1						
	Q032021000	TORNILLO ALOMADO M4x10	CURVED SCREW M.4x10	4	4						
23	3715600000	TUBO SILICONA FORRADO 26X18	LINED SILICONE TUBE 26X18	2	2						
	Q881305000	ABRAZADERA 25-40	CLAMP 25-40	4	4						
24	Z701132000	FILTRO DE JUNTA N-3	FILTER JOINT	2	2						
25	3676900000	TUBO GOMA NEGRA Ø17*10	BLACK RUBBER PIPE Ø17*10	1	1						
	Q881302000	ABRAZADERA ELASTICA 12*20	CLAMP 12-20	2	2						
26	Z601114000	MANGUERA ENTRADA AGUA	WATER INLET HOSE	1	1						
27	R145012000	JUNTA CIERRE RESISTENCIAS	JOINT	2	2						
28	R143000000	RESISTENCIA 3000WX3	HEATING ELEMENT 3000W.x3 23	2	2						
	Q163030000	TUERCA EXAGONAL M5 LATON	HEXAGONAL NUT M.5	12	12						
	Q242030000	ARANDELA ABANICO A5 A.304	FAN SHAPED WASHER A.5	12	12						
29	Z201106000	RACORD EN Y	UNION "Y"	1	1						
30	3676900000	TUBO GOMA NEGRA Ø17*10	BLACK RUBBER PIPE Ø17*10	2	2						
	Q881302000	ABRAZADERA ELASTICA 12*20	CLAMP 12-20	4	4						
31	3676900000	TUBO GOMA NEGRA Ø17*10	BLACK RUBBER PIPE Ø17*10	2	2						
	Q881302000	ABRAZADERA ELASTICA 12*20	CLAMP 12-20	4	4						
32	R675024000	GENERADOR DE VAPOR 20/11	STEAM BOILER	1	1						
33	R345011000	AISLANTE GENERADOR E-10-20/11	FRONT INSULATION BOILER	1	1						
34	R015007000	CONDUCCION VAHOS COMPLETO	CONNECTION	2	2						
	Z651931000	TOBERA ACLARADO	INJECTOR	2	2						
	Z651932000	RODETE	RUNNER	2	2						
	Q162030000	TUERCA EXAGONAL M5	HEXAGONAL NUT M.5	2	2						
	Q242030000	ARANDELA ABANICO A5 A.304	FAN SHAPED WASHER A.5	2	2						
35	R345108000	JUNTA DE VAHOS 5102805	JOINT	2	2						
36	R015034000	CUERPO GRIFO VACIADO	BOILER DRAIN TAP	1	1						

MOD.	HORNOS	ZONA	CIRCUITO DE AGUA	PLANO	C-1954

ITEM	CODIGO	DENOMINACION	TEXTO	HEM 20/11	HEP 20/11						NOTAS
37	R345014000	MANGUITO GRIFO VACIADO	EMPTYING TAP SLEEVE	1	1						
	Q881304000	ABRAZADERA 20-32	CLAMP 20-32	2	2						
38	3715600000	TUBO SILICONA 26X18	SILICONE PIPE 26X18	1	1						
	Q881305000	ABRAZADERA 25-40	CLAMP 25-40	4	4						
39	R662629000	RACORD CIERRE SONDA	PROBE CLOSING ADAPTOR	1	1						
	3712400000	TUBO SILICONA NEGRO D 8*3	BLACK SILICONE PIPE D 8*3	1	1						
40	Q223014000	CONTRATUERCA 1 LATON	LOCK NUT 1 PUL	1	1						
41	----------	TUBO DESA. (CUERPO INTERIOR)	DRAIN PIPE. (INNER BODY)	1	1						
42	R345020000	TUBO EMPALME GENERADOR	GENERATOR COUPLING TUBING	1	1						
	Q881307000	ABRAZADERA 40-60	CLAMP 40-60	2	2						
43	Q901306000	GRAPA METALICA DOS PIES	TAP HANDLE FASTENING	1	1						
	Q412002000	REMACHE AVINOX Ø4x10mm	TUBULAR RIVET 4x7,5	2	2						
44	R342803000	PALANCA GRIFO VACIADO	DRAIN TAP LEVER	1	1						
45	T115066000	AISLANTE CHIMENEA 10-20/11	FLUE PIPE INSULATION 10-20/11	1	1						
46	R345020000	TUBO EMPALME GENERADOR	GENERATOR COUPLING TUBING	1	1						
	Q881307000	ABRAZADERA 40-60	CLAMP 40-60	2	2						
47	R675043000	CHIMENEA COMPLETA 20/11E	COMPLETE FLUE PIPE 20/11E	1	1						
48	3715800000	TUBO SILICONA Ø43*51	SILICONE TUBE Ø43*51	1	1						
	Q881307000	ABRAZADERA 40-60	CLAMP 40-60	2	2						
49	R662813000	PASAMUROS CHIMENEA 101003361	FEEDTHROUGH FLUE PIPE 1010	1	1						
50	R095004000	CHIMENEA COMPLETA 20/11 E-M-P	COMPLETE CHIMNEY	1	1						
51	R662813000	PASAMUROS CHIMENEA 101003361	FEEDTHROUGH FLUE PIPE 1010	1	1						
52	R675008000	UNION RETENCION VAPORES	MOVING ROD CHIMNEY	1	1						
53	R675005000	GUIA RETENCION VAPORES	MOVING GUIDE	1	1						
54	R675007000	JUNTA RETENCION VAPORES	RUBBER SEAL	1	1						
55	R675006000	RETENCION DE VAPORES	CLOSE CHIMNEY	1	1						

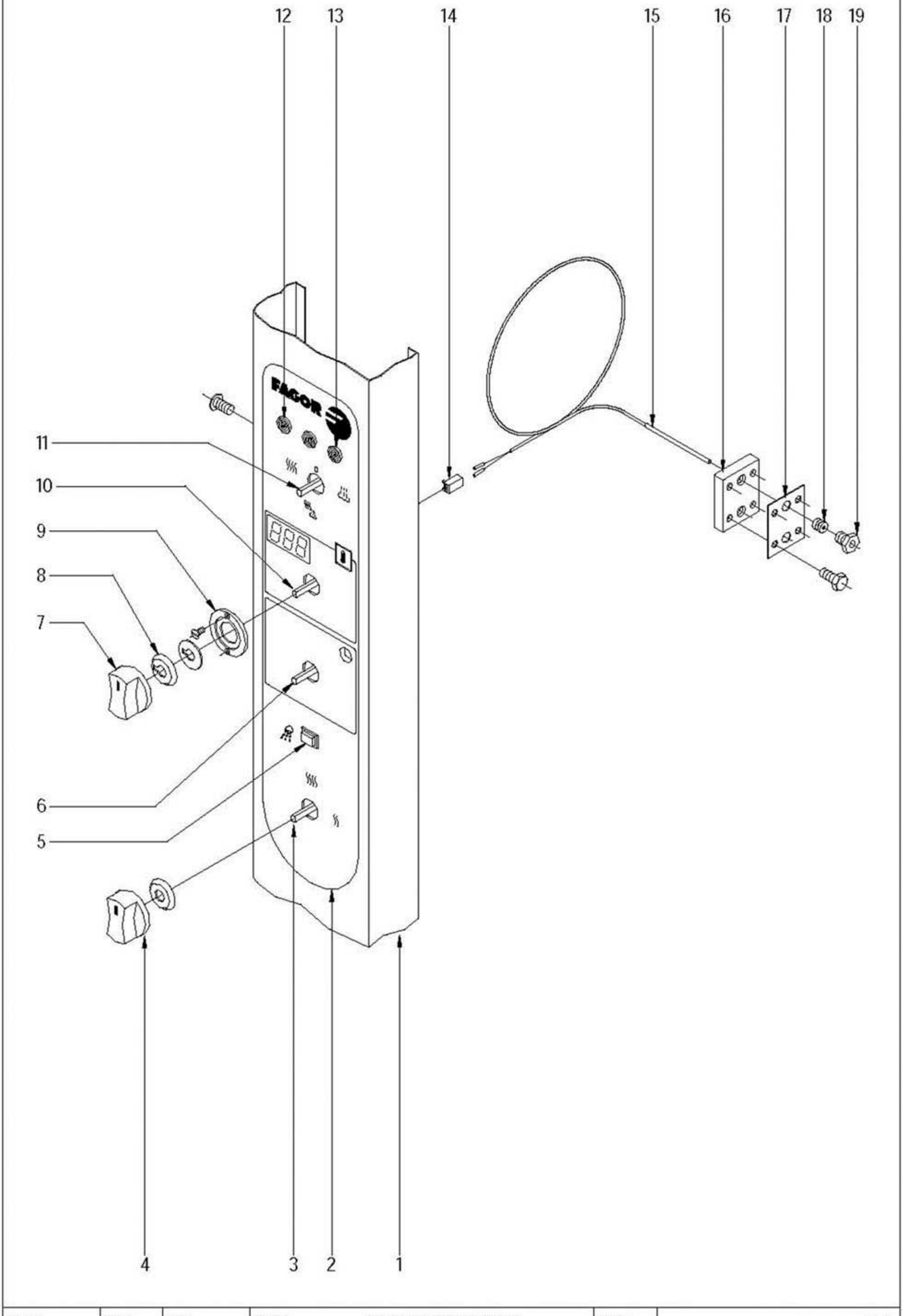

N plano	Firma	Fecha	Aparato		Lamina	
C-1955		2007-12	SISTEMA ELECTRICO PORTAMANDOS	HORNO HEI-20/11	9	Fagor Industrial S.Coop. FAGOR Onate

MOD.	HORNOS	ZONA	PARTE ELECTRICA PORTAMANDOS	PLANO	C-1955

ITEM	CODIGO	DENOMINACION	TEXTO	HEI 20/11							NOTAS
1	T102817000	PANEL PORTAMANDOS HGC-20/11	CONTROL PANEL	1							
	Q152004000	TORNILLO APLAST. M5X13 A 304	FLAT SCREW M.5x13	3							
	R692806000	SOPORTE COMPONENTES HMI	SUPPORT	1							
	R663036000	FIJACION CIRCUITO	CIRCUIT BINDINGS	4							
	R693011000	RESISTENCIA 1K8 4W	HEATING ELEMENT 1K8 (4KW)	1							
2	R703042000	SERIGRAFIA HEI-10/11	SERIGRAPHY HEI-10 / 11	1							
3	R753000000	CONMUTADOR DE POTENCIA	POWER SWITCH	1							
4	R663062000	BOTÓN DE MANDO COMPLETO	COMPLETE CONTROL BUTTON	3							
	R663046000	JUNTA CONMUTADOR	SWITCH JOINT	3							
5	R663032000	PULSADOR L41M8M959F	PUSH BUTTON	1							
6	R723000000	TEMPORIZADOR MANUAL	TIMER	1							
7	R663063000	BOTÓN DE MANDO COMPLETO	KNOB ELECTRONIC	1							
8	R663045000	JUNTA POTENCIOMETRO	RUBBER SEAL	1							
	R662810000	ARANDELA GUIA	GUIDE WASHER	1							
9	R662809000	GUIA BOTON DE MANDO	KNOB GUIDE	1							
	Q151346000	TORNILLO AVELLANADO M3x5	BOLT M.3x5	2							
10	R743013000	TERMOSTATO ELECTRONICO 270ºC	THERMOSTAT 0-270ºC	1							
11	R693004000	CONMUTADOR DE FUNCIONES	SWITCH	1							
12	R693056000	PILOTO AMBAR 41227000A4	AMBAR PILOT 41227000A4	2							
13	R693055000	PILOTO VERDE 41227000C7	GREEN PILOT 41227000C7	1							
14	R663092000	CONECTOR 2 VIAS	2-WAY CONNECTOR	1							
15	R663090000	CONJUNTO TERMOPAR	THERMOCOUPLE SET	1							
16	R662659000	APOYO RACORD SONDA	PROBE RACORD SUPPORT	1							
17	R692811000	JUNTA PASAMUROS DOBLE	DOUBLE FEEDTHROUGH GASKE	1							
18	R662652000	BICONO CIERRE SONDA	PROBE CLOSING BICONE	1							
19	R662629000	RACORD CIERRE SONDA	PROBE CLOSING ADAPTOR	1							
	Q032021000	TORNILLO ALOMADO M4X10	CURVED SCREW M.4x10	4							
	Q232020000	ARANDELA A-4	FLAT WASHER A.4	4							

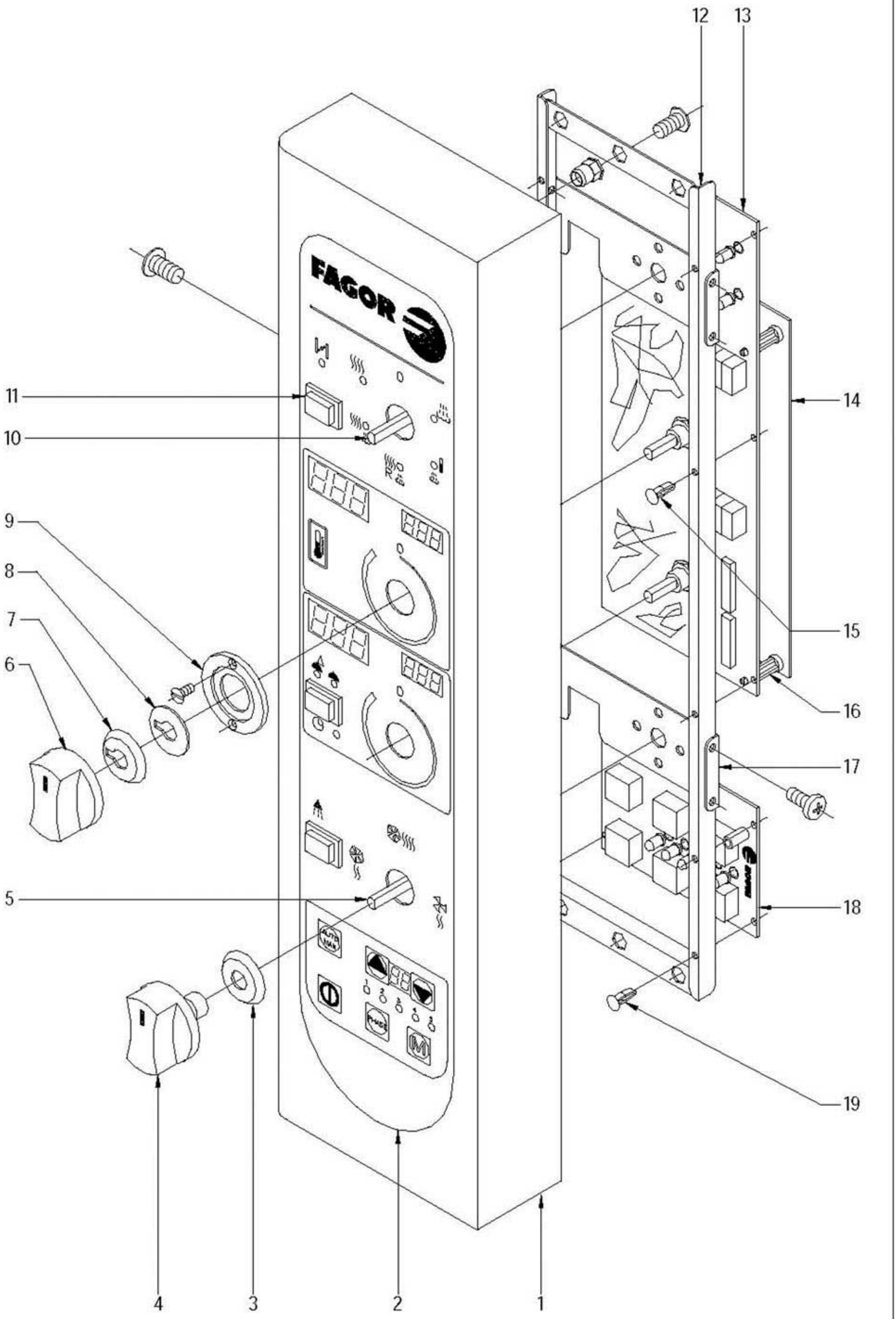

N plano	Firma	Fecha	Aparato	Lamina	
C-1956		2007-12	SISTEMA ELECTRICO PORTAMANDOS HORNOS HEM; HEP-20/11	10	Fagor Industrial S.Coop. Onate

MOD.	HORNOS	ZONA	PARTE ELECTRICA PORTAMANDOS	PLANO	C-1956

ITEM	CODIGO	DENOMINACION	TEXTO	HEM 20/11	HEP 20/11						NOTAS
1	R092867000	PORTAMANDOS COMPLETO 20/11	COMPLETE CONTROL HOLDER 2	1	1						
	Q152004000	TORNILLO APLAST. M5X13 A 304	FLAT SCREW M.5x13	5	5						
	Q221342000	REMACHE EXAGONAL M5	HEXAGONAL RIVET M.5	2	2						
2	R673067000	SERIGRAFIA HEM-10/11 20/11	SERIGRAPHY HEM-10/11 20/11	1	_						
2	R673068000	SERIGRAFIA HEP-10/11 20/11	SERIGRAPHY HEP-10/11 20/11	_	1						
3	R663046000	JUNTA CONMUTADOR	SWITCH JOINT	2	2						
4	R663062000	BOTÓN DE MANDO COMPLETO	COMPLETE CONTROL BUTTON	2	2						
5	R663026000	CONMUTADOR FUNC 3P HME/P	FUNCTION SWITCH	1	1						
6	R663063000	BOTÓN DE MANDO COMPLETO	KNOB ELECTRONIC	2	2						
7	R663045000	JUNTA POTENCIOMETRO	RUBBER SEAL	2	2						
8	R662810000	ARANDELA GUIA	GUIDE WASHER	2	2						
9	R662809000	GUIA BOTON DE MANDO	KNOB GUIDE	2	2						
	Q151346000	TORNILLO AVELLANADO M3x5	BOLT M.3x5	4	4						
10	R663025000	CONMUTADOR FUNC 6P HME/P	MODE SWITCH	1	1						
11	R663032000	PULSADOR L41M8M959F	PUSH BUTTON	3	3						
12	R663005000	SOPORTE CIRCUITO IMPRESO	ELECTRONIC SUPPORT FRAME	1	1						
13	R663050000	CIRCUITO IMPRESO MANDO	ELECTRONIC DISPLAYS	1	1						
14	R663085000	CIRCUITO IMPR. CONTROL PROGR	ELECTROC BOARD HMP	1	1						
15	R663036000	FIJACION CIRCUITO	CIRCUIT BINDINGS	6	6						
16	R663035000	SEPARADOR 19,1 MM. HME/P	PLASTIC SEPARATOR	4	4						
17	R663008000	SOPORTE CONMUTADOR	COMMUTATOR SUPPORT	2	2						
	Q151320000	TORN. ALOMADO M4X6 H.ZINCADO	CURVED SCREW M.4x6	8	8						
18	R663004000	CIRCUITO IMPRESO PROGRAMA	ELECTRONIC PROGRAMER	_	1						
19	R663036000	FIJACION CIRCUITO	CIRCUIT BINDINGS	_	4						

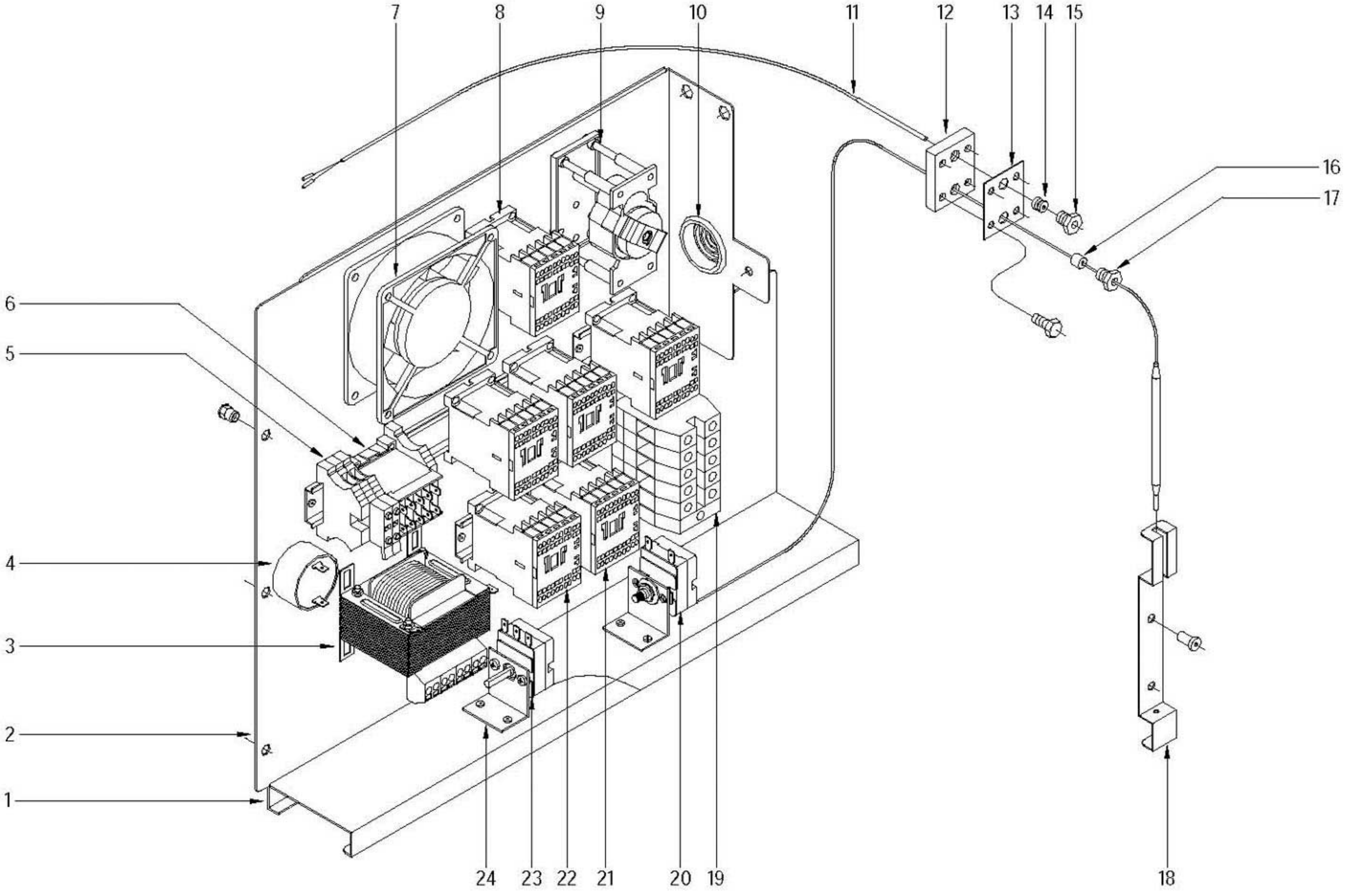

N plano	Firma	Fecha	Aparato		Lamina	
C-1957		2007-12	CUADRO ELECTRICO HORNO HEI-20/11		11	Fagor Industrial S.Coop. FAGOR Oñate

MOD.	HORNOS	ZONA	CUADRO ELECTRICO	PLANO	C-1957

ITEM	CODIGO	DENOMINACION	TEXTO	HEI 20/11							NOTAS
1	R723101000	CONTRAGUIA CUADRO HCG	SWITCHBOARD COUNTERGUIDE	1							
	Q412002000	REMACHE AVINOX Ø4x10MM	TUBULAR RIVET 4x7,5	7							
2	R663081000	PANEL CUADRO 6-10-20/11 ELECT	SWITCHBOARD PANEL 6-10-20/1	1							
	Q221342000	REMACHE EXAGONAL M5	HEXAGONAL RIVET M.5	3							
3	R503005000	TRANSFORMADOR	TRANSFORMER	1							
	Q032021000	TORNILLO ALOMADO M4x10	CURVED SCREW M.4x10	4							
	Q162020000	TUERCA EXAGONAL M4	HEXAGONAL NUT M4	4							
4	R693067000	ZUMBADOR	BUZZER	1							
5	R073005000	BORNAS PORTA FUSIBLES	FUSE SUPPORT	2							
	Z263303000	TOPE FINAL	END BUFFER 10	1							
6	Z683087000	CONTACTOR 3TF20 01-3AL2 230	CONTACTOR 230V 50-60 Hz	1							
	Z263303000	TOPE FINAL	END BUFFER 10	1							
7	Z103066000	VENTILADOR 230V.50-60HZ	FAN 230V 50/60HZ	1							
8	Z743009000	CONTAC. SIRIUS 3RT10 16-2AP02	SIRIUS 3RT10, 16-2APO2 CONTA	1							
9	R763006000	PROGRAMADOR INVERSION GIRO	PROGRAMMER	1							
	Z123018000	GUIA CONTACTOR L-55	CONTACTOR GUIDE L=55	1							
10	N103013000	PASA CABLES	BUSHING	1							
11	R663090000	CONJUNTO TERMOPAR	THERMOCOUPLE SET	1							
12	R662659000	APOYO RACORD SONDA	PROBE RACORD SUPPORT	1							
13	R692811000	JUNTA PASAMUROS DOBLE	DOUBLE FEEDTHROUGH GASKE	1							
14	R662652000	BICONO CIERRE SONDA	PROBE CLOSING BICONE	1							
15	R662629000	RACORD CIERRE SONDA	PROBE CLOSING ADAPTOR	1							
	Q032021000	TORNILLO ALOMADO M4X10	CURVED SCREW M.4x10	4							
	Q232020000	ARANDELA A-4	FLAT WASHER A.4	4							
16	R662662000	JUNTA CIERRE BULBO LIMITADOR	LIMITING BULB CLOSING JOINT	1							
17	R662629000	RACORD CIERRE SONDA	PROBE CLOSING ADAPTOR	1							
	Q412002000	REMACHE AVINOX Ø4x10MM	TUBULAR RIVET 4x7,5	4							
18	R662683000	SOPORTE BULBO	LIMITING BULB HOLDER	1							
	Q412002000	REMACHE AVINOX Ø4x10MM	TUBULAR RIVET 4x7,5	2							

MOD.	HORNOS	ZONA	CUADRO ELECTRICO	PLANO	C-1957

ITEM	CODIGO	DENOMINACION	TEXTO	HEI 20/11							NOTAS
19	R263003000	BORNA PASO 35MM	GREY PHASE 35 TERMINAL	3							
	R673010000	BORNA PASO AZUL 35MM	NEUTRAL TERMINAL 35 BLUE	1							
	Z103035000	BORNA TIERRA 35MM	EARTH TERMINAL 35mm YELLOV	1							
	Z683096000	TOPE FINAL WEW35 10590.0	END BUFFER 35	1							
	Z683068000	SEÑALIZ.DEK-6WEIDMULLER	R-S-T-N LABEL	1							
	R663055000	GUIA CONTACTOR L-120	CONTACTOR GUIDE L=120	1							
20	R243016000	LIMITADOR TEMPERATURA	SAFETY THERMOSTAT	1							
21	Z203050000	CONTACTOR SIRIUS 3R 230V.50-60	CONTACTOR 3RT-1016-21P01	4							
	R693009000	GUIA CONTACTOR L-250	CONTACTOR GUIDE L=250	1							
22	Z743009000	CONTAC. SIRIUS 3RT10 16-2AP02	SIRIUS 3RT10, 16-2APO2 CONTA	1							
	Z403016000	GUIA CONTACTOR L-100	CONTACTOR GUIDE L=100	1							
23	R343018000	TERMOSTATO VAPOR	STEAM THERMOSTAT	1							
24	R343039000	SOPORTE TERMOS VAPOR	THERMOSTAT SUPPORT	2							
	Q412002000	REMACHE AVINOX Ø4x10MM	TUBULAR RIVET 4x7,5	4							

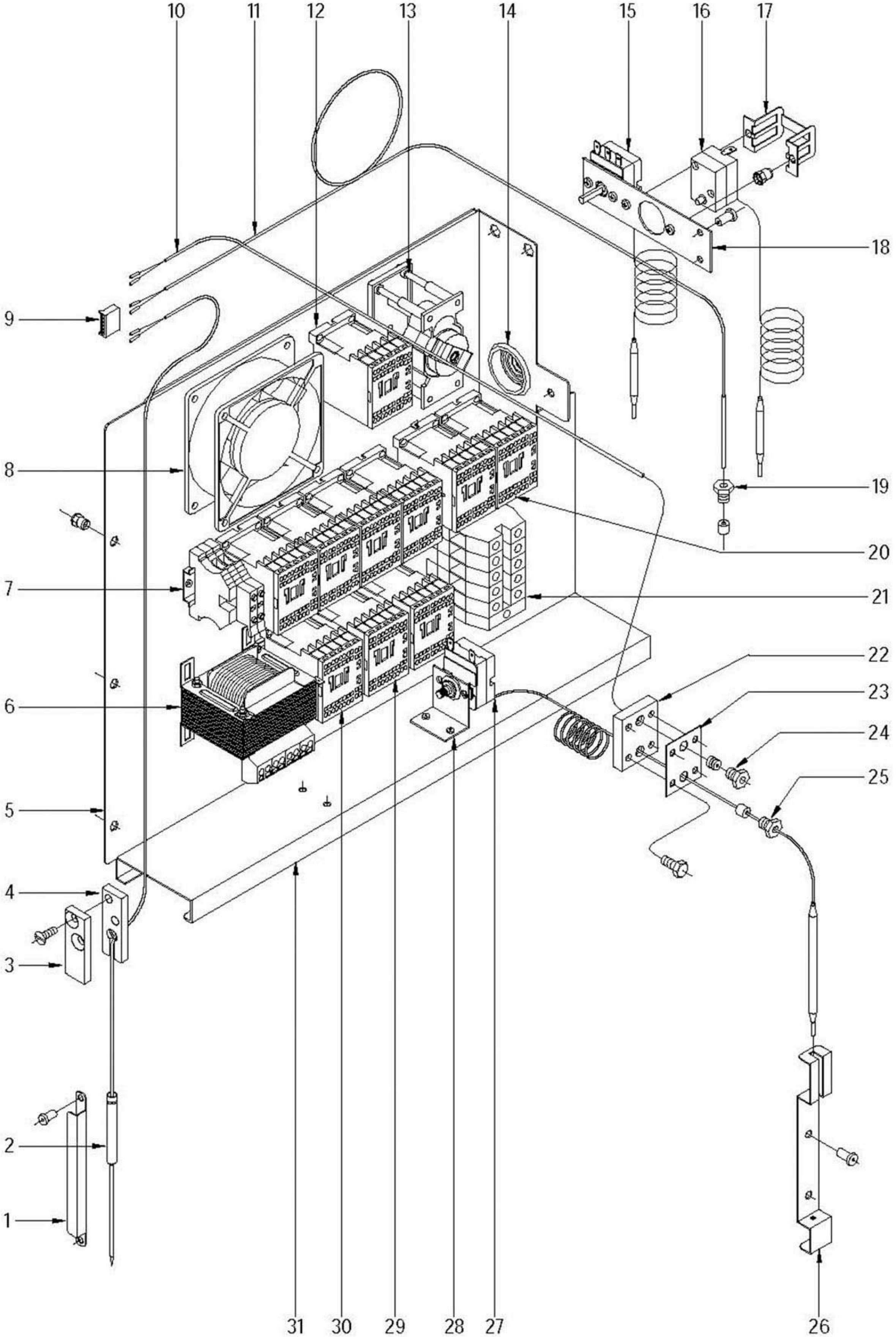

N plano	Firma	Fecha	Aparato	Lamina	
C-1958	Irene Beraza	2007-12	CUADRO ELECTRICO HORNOS HEM; HEP-20/11	12	Fagor Industrial S.Coop. FAGOR Oñate

MOD.	HORNOS	ZONA	CUADRO ELECTRICO	PLANO	C-1958

ITEM	CODIGO	DENOMINACION	TEXTO	HEM 20/11	HEP 20/11						NOTAS
1	R092633000	RETENEDOR DE SONDA	CORE PROBE RETAINER	3	3						
	Q412002000	REMACHE AVINOX Ø4x10MM	TUBULAR RIVET 4x7,5	3	3						
2	R673076000	CONJUNTO SONDA NUCLEO J XX/1	MEAT PROBE SET	1	1						
	Q221341000	REMACHE EXAGONAL M4	HEXAGONAL RIVET M.4	2	2						
3	T133037000	TAPA SUJECION SONDA	COVER CORE PROBE	1	1						
4	T133036000	BASE SUJECION SONDA	FIXING CORE PROBE	1	1						
5	R663081000	PANEL CUADRO 6-10-20/11 ELECT	SWITCHBOARD PANEL 6-10-20/1	1	1						
	Q221342000	REMACHE EXAGONAL M5	HEXAGONAL RIVET M.5	3	3						
6	R503005000	TRANSFORMADOR	TRANSFORMER	1	1						
	Q032021000	TORNILLO ALOMADO M4x10	CURVED SCREW M.4x10	4	4						
	Q162020000	TUERCA EXAGONAL M4	HEXAGONAL NUT M4	4	4						
7	R073005000	BORNAS PORTA FUSIBLES	FUSE SUPPORT	2	2						
	Z263303000	TOPE FINAL	END BUFFER 10	2	2						
8	Z103066000	VENTILADOR 230V.50-60HZ	FAN 230V 50/60HZ	1	1						
9	R663093000	CONECTOR 6 VIAS	6-WAY CONNECTOR	1	1						
10	R663090000	CONJUNTO TERMOPAR	THERMOCOUPLE SET	1	1						
11	R663089000	CONJ, TERMOPAR VAPOR HME/P	STEAM THERMOCOUPLE ASSEM	1	1						
12	Z743009000	CONT.SIRIUS 3RT10 16-2AP02	SIRIUS 3RT10, 16-2APO2 CONTA	1	1						
13	R763006000	PROGRAMADOR INVERSION GIRO	PROGRAMMER	1	1						
	Z123018000	GUIA CONTACTOR L-55	CONTACTOR GUIDE L=55	1	1						
14	N103013000	PASA CABLES	BUSHING	1	1						
15	R343100000	TERMOSTATO CONDUC. VAPOR	STEAM CONDUCTION THERMOS	1	1						
16	Z213014000	LIMITADOR TECASA P.	TECASA LIMITER THERMOSTAT	1	1						
17	Z203060000	AMARRE LIMITADOR TECASA	TECASA LIMITER ANCHORING	1	1						
	Q221341000	REMACHE EXAGONAL M4	HEXAGONAL RIVET M.4	2	2						
18	R673077000	SOPORTE AMARRE TERMOSTATOS	THERMOSTAT ATTACHMENT SUI	1	1						
	Q412002000	REMACHE AVINOX Ø4x10MM	TUBULAR RIVET 4x7,5	2	2						
19	R662629000	RACORD CIERRE SONDA	PROBE CLOSING ADAPTOR	1	1						
	3712400000	TUBO SILICONA NEGRO D 8*3	BLACK SILICONE PIPE D 8*3	1	1						
20	Z203050000	CONTACTOR SIRIUS 3R 230V.50-60	CONTACTOR 3RT-1016-21P01	6	6						
	R693009000	GUIA CONTACTOR L-250	CONTACTOR GUIDE L=250	1	1						

MOD.	HORNOS	ZONA	CUADRO ELECTRICO	PLANO	C-1958

ITEM	CODIGO	DENOMINACION	TEXTO	HEM 20/11	HEP 20/11						NOTAS
21	R263003000	BORNA PASO 35MM	GREY PHASE 35 TERMINAL	3	3						
	R673010000	BORNA PASO AZUL 35MM	NEUTRAL TERMINAL 35 BLUE	1	1						
	Z103035000	BORNA TIERRA 35MM	EARTH TERMINAL 35mm YELLOV	1	1						
	Z683096000	TOPE FINAL WEW35 10590.0	END BUFFER 35	1	1						
	Z683068000	SEÑALIZ.DEK-6WEIDMULLER	R-S-T-N LABEL	1	1						
	R663055000	GUIA CONTACTOR L-120	CONTACTOR GUIDE L=120	1	1						
22	R662659000	APOYO RACORD SONDA	PROBE RACORD SUPPORT	1	1						
23	R692811000	JUNTA PASAMUROS DOBLE	DOUBLE FEEDTHROUGH GASKE	1	1						
24	R662629000	RACORD CIERRE SONDA	PROBE CLOSING ADAPTOR	1	1						
	R662652000	BICONO CIERRE SONDA	PROBE CLOSING BICONE	1	1						
25	R662629000	RACORD CIERRE SONDA	PROBE CLOSING ADAPTOR	1	1						
	R662662000	JUNTA CIERRE BULBO LIMITADOR	LIMITING BULB CLOSING JOINT	1	1						
	Q012021000	TORNILLO EXAGONAL M4x10 A304	HEXAGONAL BOLT M4x10 A304	4	4						
26	R662683000	SOPORTE BULBO	BULB SUPPORT	1	1						
	Q412002000	REMACHE AVINOX Ø4x10MM	TUBULAR RIVET 4x7,5	4	4						
27	R243016000	LIMITADOR TEMPERATURA	TEMPERATURE LIMITER	1	1						
28	R343039000	SOPORTE TERMOS VAPOR	THERMOSTAT SUPPORT	1	1						
	Q412002000	REMACHE AVINOX Ø4x10MM	TUBULAR RIVET 4x7,5	2	2						
29	Z203050000	CONTACTOR SIRIUS 3R 230V.50-60	SIRIUS CONTACTOR 3R 230V.50-	2	2						
	Z103084000	GUIA CONTACTOR L-138 "	CONTACOR GUIDE L-138 "	1	1						
30	Z743009000	CONT.SIRIUS 3RT10 16-2AP02	SIRIUS 3RT10, 16-2APO2 CONTA	1	1						
31	R723101000	CONTRAGUIA CUADRO HCG	SWITCHBOARD COUNTERGUIDE	1	1						
	Q412002000	REMACHE AVINOX Ø4x10MM	TUBULAR RIVET 4x7,5	7	7						

MOD.	HORNOS	ZONA	VARIOS	PLANO	

ITEM	CODIGO	DENOMINACION	TEXTO	HEI 20/11	HEM 20/11	HEP 20/11					
	R696501000	FOLLETO INSTRUCCIONES HMI	INSTRUCTIONS BROCHURE	1	_	_					
	R666501000	FOLLETO DE INSTRUC. HME/HMP	INSTRUCTIONS BROCHURE	_	1	1					
	R703041000	ESQUEMA TEORICO HEI 10/11	THEORETICAL DIAGRAM HEI 10/	1	_	_					PLANO HC-76614
	R143032000	ESQUEMA TEORICO HME20	THEORETICAL DIAGRAM HME20	_	1	1					PLANO HC-77660
	R703016000	ESQUEMA DE MONTAJE HMI	ASSEMBLY DIAGRAM HMI	1	_	_					PLANO HC-73224
	R143018000	ESQUEMA DE MONTAJE HME/HMP	ASSEMBLY DIAGRAM HME/HMP	_	1	1					PLANO HD-12681
	R693089000	INSTALACION ELECTRICA HMI	ELECTRICAL INSTALLATION HMI	1	_	_					
	R143017000	INSTALACION ELECTR. HME/HMP	ELEC. INSTALLATION HME/HMP	_	1	1					
	R703013000	CABLEADO FUERZA HMI 10/11	WIRING HMI 10/11	1	_	_					
	R143005000	CABLEADO FUERZA CONVECCION	WIRING TO CONVECTION	1	1	1					
	R673013000	CABLEADO FUERZA CUADRO ELE.	WIRING TO SWITCHBOARD	_	1	1					
	R143004000	CABLEADO FUERZA VAPOR	WIRING TO STEAM		1	1					
	R093023000	CABLEADO LUZ INTERIOR	INTERIOR LIGHT WIRING	1	1	1					
	R093004000	CABLEADO AUXILIAR	AUXILIAR WIRING	2	2	2					
	R763007000	CABLEADO INVERSION GIRO E	WIRING INVERT ROTATION E	1	1	1					
	R763011000	MONTAJE INVERSION GIRO HMM	ASSEMBLY INVERT ROTATION H	1	1	1					
	R143009000	INSTALACION DOBLE POTENCIA	DOUBLE POWER INSTALLATION	_	1	1					
	T133001000	CABLEAD. CONEXION 2 MOTORES	WIRING CONNECTION 2 MOTOR	1	1	1					
	R663041000	CONEXION CONTROL PROGRAMA	CONNECTION PROGRAMME CO	_	_	1					

MOD.	HORNOS	ZONA	CAMBIOS PARA PASAR DE (380-415V. 50Hz) A (220V. 50Hz)	PLANO	C-1952

ITEM	CODIGO	DENOMINACION	TEXTO	HEI 20/11	HEM 20/11	HEP 20/11					
		PIEZAS A ELIMINAR	**PARTS TO BE REMOVED**								
2	T493003000	MOTOR 20/21 2V 400V	MOTOR 20/21 2V 400V.	_	2	2					
		PIEZAS A INTRODUCIR	**PARTS TO BE INCLUDED**								
2	T493004000	MOTOR 20/21 2V 230V.	MOTOR 20/21 2V 230V.	_	2	2					

MOD.	HORNOS	ZONA	CAMBIOS PARA PASAR DE (380-415V. 50Hz) A (380-415V. 60Hz)	PLANO	C-1949

ITEM	CODIGO	DENOMINACION	TEXTO	HEI 20/11	HEM 20/11	HEP 20/11					
		PIEZAS A INTRODUCIR	**PARTS TO BE INCLUDED**								
13	T322606000	REDUCC. CUBREVENT. 60HzD160	FANCOVER REDUC. 60HzD160		2	2					

MOD.	HORNOS	ZONA	CAMBIOS PARA PASAR DE (380-415V. 50Hz) A (220V. 60Hz)	PLANO	

ITEM	CODIGO	DENOMINACION	TEXTO	HEI 20/11	HEM 20/11	HEP 20/11					
		PIEZAS A ELIMINAR	**PARTS TO BE REMOVED**								
2	T493003000	MOTOR 20/21 2V 400V	MOTOR 20/21 2V 400V.	_	2	2					PLANO HC-1952
		PIEZAS A INTRODUCIR	**PARTS TO BE INCLUDED**								
13	T322606000	REDUCC. CUBREVENT. 60HzD160	FANCOVER REDUC. 60HzD160	_	2	2					PLANO HC-1949
2	T493004000	MOTOR 20/21 2V 230V.	MOTOR 20/21 2V 230V.	_	2	2					PLANO HC-1952

MOD.	HORNOS	ZONA	PIEZAS ESPECIFICAS PARA VAUBAN	PLANO	C-1947

ITEM	CODIGO	DENOMINACION	TEXTO	VEI-20/11	VECE-20/11	VECP-20/11					
		PIEZAS A ELIMINAR	**PARTS TO BE REMOVED**								
5	R703042000	SERIGRAFIA HEI-10/11	SERIGRAPHY HEI-10 / 11	1	_	_					
5	R673067000	SERIGRAFIA HEM-10/11 20/11	SERIGRAPHY HEM-10/11 20/11	_	1	_					
5	R673068000	SERIGRAFIA HEP-10/11 20/11	SERIGRAPHY HEP-10/11 20/11	_	_	1					
		PIEZAS A INTRODUCIR	**PARTS TO BE INCLUDED**								
5	R703043000	SERIGRAFIA VAUBAN VEI-10/11	SERIGRAPHY VAUBAN VEI-10/11	1	_	_					
5	R673069000	SERIGRAFIA VAUBAN VECE-10/11	SERIGRAPHY VAUBAN VECE-10/	_	1	_					
5	R673070000	SERIGRAFIA VAUBAN VECP-10/11	SERIGRAPHY VAUBAN VECP-10/	_	_	1					

HEI - 10 / 11, HEI - 20 - 11

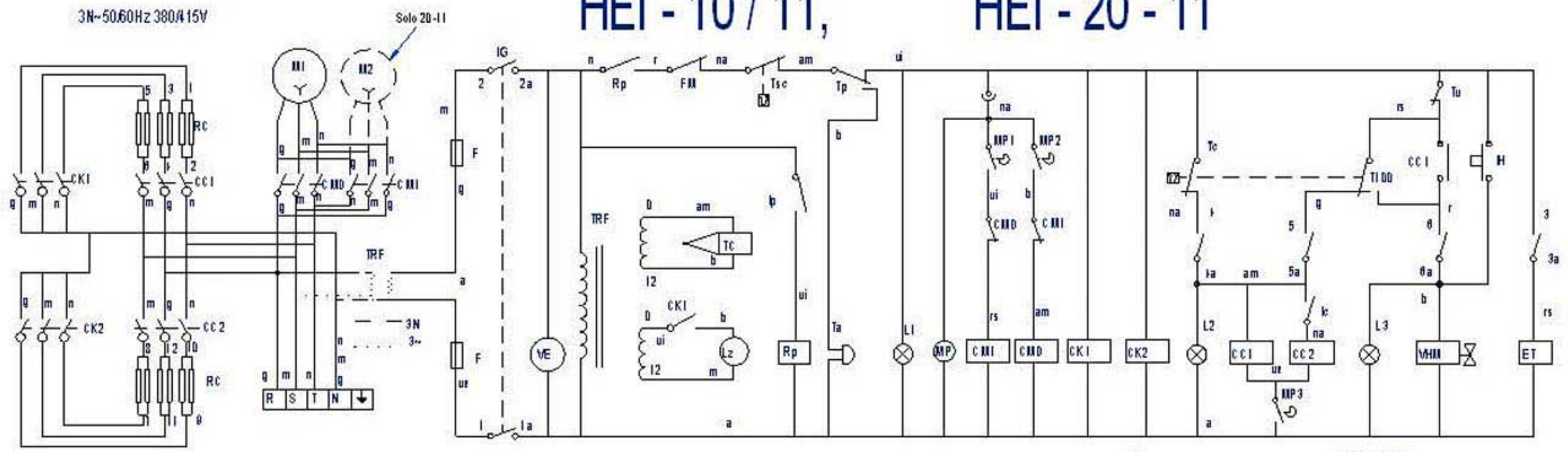

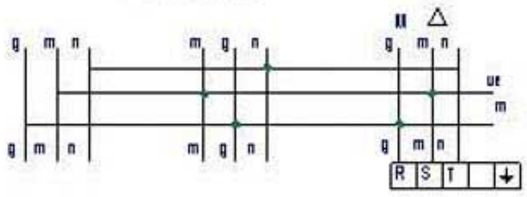

P = Door's switch
IG = General switch
F = Fuse
CMD = Right Motor's relay
CMI = Left Motor's relay
VDV = Steamer's solenoid
DN = Water level control
TM = Motor's thermal protection
TSV = Steamer's security thermostat
TSC = Connection's security thermostat
LZ = Indoor light
VHM = Humidify water solenoid
CE = Electronic main control
RV = Steamer elements
VE = Control panel's fan
Tr = Chimney selector

TRF, TRFI = Transformer
ET = Chimney solenoid
Ic = Power reduction switch
VCN = Steamer condenser solenoid
TV = Steam probe
TC = Connection probe
TN = Food probe
M = Motor
CC1 ,CC2 = Heating air relays
CV1 ,CV2 = Heating water relays
CK1 ,CK2 ,K1 ,K2 = Elements relays
TCN = Steam condenser thermostat
H = Humidify switch
T = Timer or Food probe selector
RC = Heating element
MP = Timer Motor's inversion

am = amarillo-yellow-jaune
a = azul-blue-bleu
b = blanco-white-blanc
g = gris-grey-gris
ue = verde-green-vert
na = naranja-orange-orange
r = rojo-red-rouge
m = marron-brown-marron
n = negro-black-noir
rs = rosa-pink-rose
ui = violeta-violet-violette
amAze = amarilloAzuerde-yellowAgreen-jauneAvert

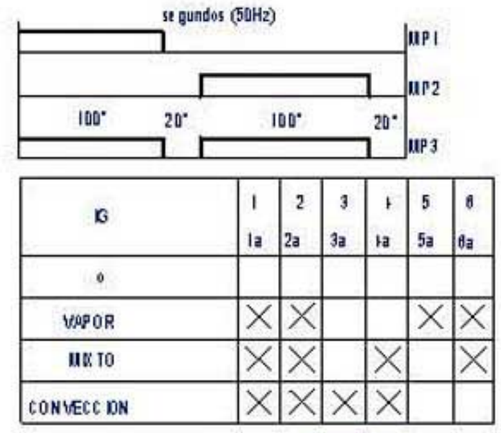

IG	1 1a	2 2a	3 3a	4 4a	5 5a	6 6a
0						
VAPOR	X	X			X	X
MIXTO	X	X		X		X
CONVECCION	X	X	X	X		

R1030-1000

T100: Termostato de 100ºC
Rc: Resistencia de calentamiento
IG: Interruptor general
Lz: Luz interior
F: Fusible
CMD, CMI: Contactor motor
VHM: Electrovalvula humidificador
IP: Interruptor puerta
FM: Térmico motor
TP: Temporizador manual
TSC: Termostato seguridad conexión
TV: Termostato vapor
TRF: Transformador

M: Motor
Tc: Termostato conexión
CK1, CC1 : Contactor calentamiento
ET: Electroimán de apertura de tiro
C: Condensador
L1: Lámpara marcha
L2: Lámpara calentamiento
L3: Lámpara humidificador
Ta: Timbre avisador
FI: Filtro de interferencias
IH: Pulsador de humidificador
VE: Ventilador cuadro eléctrico
Rp: Relé puerta
MP = Programador inversion motor

			3 ~ 50/60Hz 230 V		
	Esquema teorico HEI 10-11, HEI 20-11		3 ~ 50/60Hz 400 V	R-703041	
Nº	Pieza		Material	Nº Clasificación	Acabado
Nº	Modificación		Propuesta de	Fecha	Tolerancias generales
1	Introducir HEI - 20-11		M.Martillo	31-05-2001	<25 ± 50-400 ±
					5 -25 ± >400 ±
					25 -50 ± ○ ±

	Firma	Fecha
Dibujado	Iratxe	13/11/98
Proyectado		
Comprobado		

FAGOR
Fagor Industrial,Koop.Elk., Mugarra

Mecanizado superficial

Escala

HORNOS

Plano número
HC-76614 - 1

Sustituye al Nº

Sustituido por

MODELO HEM-20/11 HEP-20/11 HEM-20/21 HEP-20/21

3N ~ 50/60Hz 380/415V

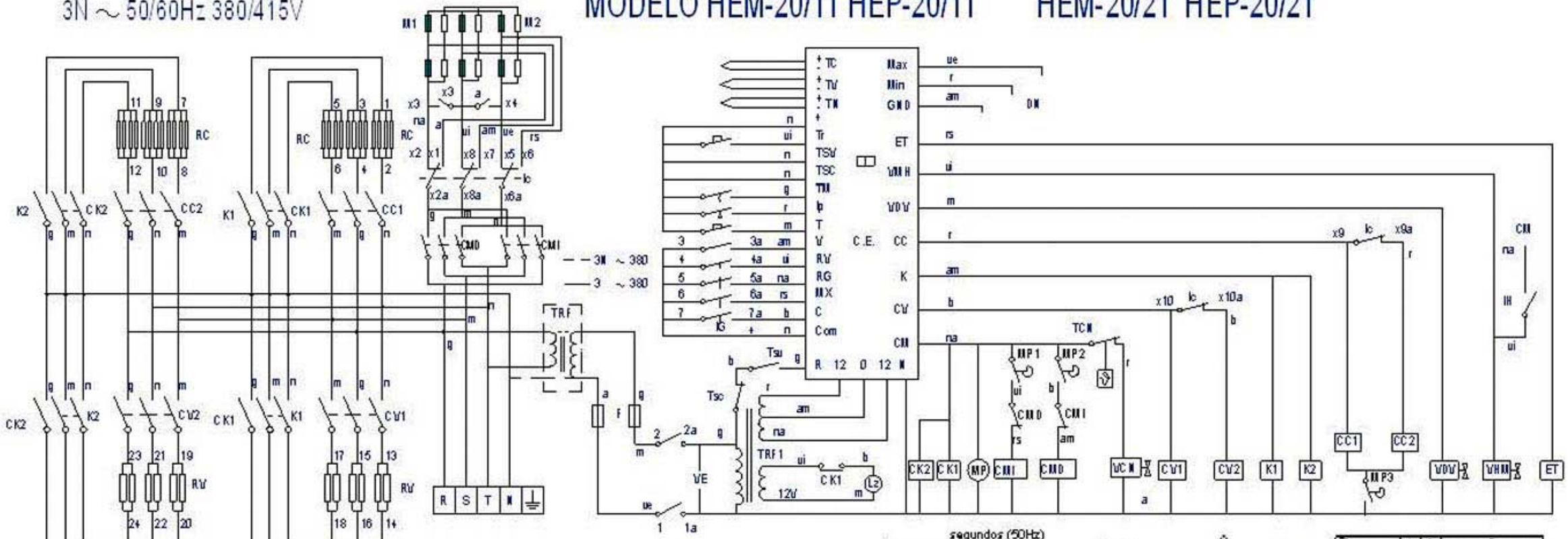

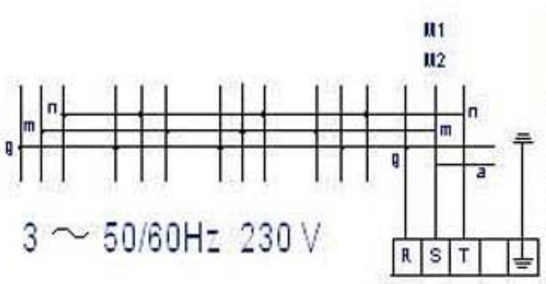

3 ~ 50/60Hz 230 V

IP = Door's switch
IG = General switch
F = Fuse
CMD = Right Motor's relay
CMI = Left Motor's relay
VDV = Steamer's solenoid
DN = Water level control
TM = Motor's thermal protection
TSV = Steamer's security thermostat
TSC = Convection's security thermostat
LZ = Indoor light
VHM = Humidity water solenoid
CE = Electronic main control
RV = Steamer elements
VE = Control panel's fan
Tr = Chimney selector

TRF, TRF1 = Transformer
ET = Chimney solenoid
Ic = Power reduction switch
VCN = Steamer condenser solenoid
TV = Steam probe
TC = Convection probe
TN = Food probe
M1, M2 = Motor
CC1,CC2 = Heating air relays
CV1,CV2 = Heating water relays
CK1,CK2,K1,K2 = Elements relays
TCN = Steam condenser thermostat
IH = Humidity switch
T = Timer or Food probe selector
RC = Heating element
MP = Timer Motor's inversion

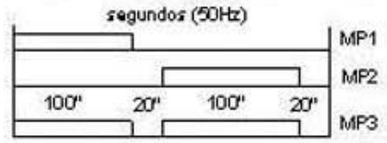

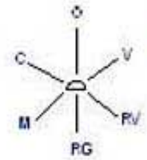

IG

am = amarillo-yellow-jaune
a = azul-blue-bleu
b = blanco-white-blanc
g = gris-grey-gris
ve = verde-green-vert
na = naranja-orange-orange
r = rojo-red-rouge
m = marron-brown-marron
n = negro-black-noir
rs = rosa-pink-rose
vi = violeta-violet-violette

Mode	1 1a	2 2a	3a	4a	5 5a	6a	7a
OFF							
VAPOR	X	X	X				
REG VAPOR	X	X		X			
REGENERAC	X	X			X		
MIXTO	X	X				X	
CONVECCION	X	X					X

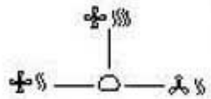

Ic	x1 x1a	x2 x2a	x3 x3a	x4 x4a	x5 x5a	x6 x6a	x7 x7a	x8 x8a	x9 x9a	x10 x10A
	X		X	X		X	X			
	X		X	X		X	X		X	X
		X			X			X		

R143032000

am/ve = amarillo/verde-yellow/green-jaune/vert

	ESQUEMA TEORICO HME/P 20/11-20/21			R143032000		
N°	Pieza	Cant.	Material	N° Clasificacion	Acabado	
N°	Modificacion		Propuesta de	Fecha	Tolerancias generales	
					<5±	50–100± :
					5–25± :	>100±
					25–50± :	<X±

	Firma	Fecha
Dibujado	M. Mallo	17-10-2004
Proyectado	M. Mallo	17-10-2004
Comprobado		17-10-2004
Escala		

FAGOR

Fagor Industrial, Koop. Elk., Mugatua

Mecanizado superficial

HORNO MIXTO HME HMP

Plano numero HC-77660

Sustituye al N° hc72270

Sustituido por

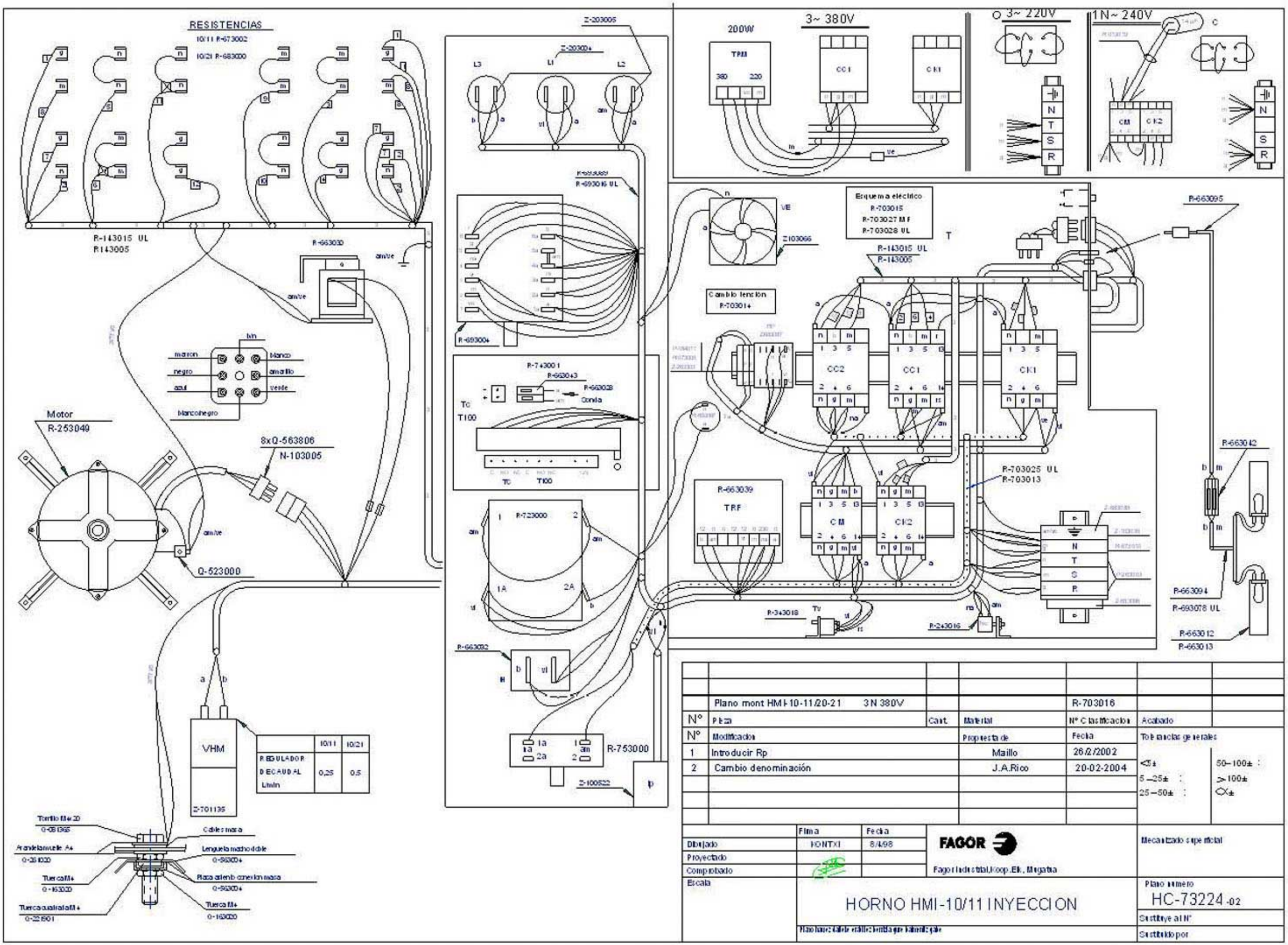
RESISTENCIAS
10/11 R-673002
10/21 R-683000
R-143015 UL
R143005
R-663030
am/ve
Motor
R-253049
8xQ-563806
N-103005
Q-523000
VHM
Z-701135
REGULADOR DE CAUDAL L/min
10/11
10/21
0,25
0,5
Tornillo M4x20
Arandela muelle A4
Tuerca M4
Tuerca cuadrada M4
Cables masa
Lengüeta macho doble
Plaza asiento conexion masa
Z-203005
Z-203004
L3
L1
L2
R-693016 UL
R-693004
R-743001
R-663043
R-663028
Conda
Tc
T100
R-723000
1A
2A
R-663032
R-753000
Z-100522
200W
TPM
380
220
3~ 380V
CC1
CK1
3~ 220V
1N~ 240V
CM
CK2
N
T
S
R
Esquema eléctrico
R-703015
R-703027 MF
R-703028 UL
Z103066
Cambio tensión
R-703014
CC2
CC1
CK1
R-663039
TRF
CM
CK2
R-703025 UL
R-703013
R-343018
R-243016
R-663095
R-663042
R-663094
R-693078 UL
R-663012
R-663013
Plano mont HMI-10-11/20-21 3N 380V
R-703016
N° Pieza
Cant.
Material
N° Clasificacion
Acabado
N° Modificacion
Propuesta de
Fecha
1 Introducir Rp
Maillo
26/2/2002
2 Cambio denominación
J.A.Rico
20-02-2004
Tolerancias generales
<5±
5 –25± :
25 –50± :
50–100± :
>100±
<X±
Firma
Fecha
Dibujado
KONTXI
8/4/98
Proyectado
Comprobado
Escala
FAGOR
Fagor Industrial, Koop. Elk., Mugatua
Mecanizado superficial
HORNO HMI-10/11 INYECCION
Plano numero
HC-73224-02
Sustituye al N°
Sustituido por

Resistencias

10/11 ——— R-673002
10/21 20/21 ——— R-663000 —20/11 TANICO
20/11 ——— R-093002

20/21 20/11 TANICO
LA CONEXION ES IGUAL
PARA LAS RESISTENCIAS
INFERIORES

ELECTROIMAN
Apertura
tiro
R-663030

ET

am/ve

b/n
marron
negro
azul
blanco/negro
blanco
amarillo
verde

Q-523000

solo 20/11 20/21
R-093004

SOLO 20/11 20/21
T-133001

MOTOR
380V R-663033
220V R-663034

N-103005
8xQ-563806

Solo 20/11 20/21

R-665016
R-345060
R-345063
R-345064

Termostato Limitador Calderín
R-343124

Termostato Condensación
R-343100

TSV
TCN

RESISTENCIAS DE GENERADOR
R-143000

SOLO VERSION 20/21

Calderín
Humidificador
Condensación

VDV
VHM
R-255001
VCN
Z-701135

Arandela A4
Q-233120
Tuerca M4
Q-163020
Terminal

DETALLE DEL MONTAJE "A"

Tornillo M4x20
Q-081365
Arandela muelle A4
Q-261020
Tuerca M4
Q-163020
Tuerca moletada M4
Q-221901
Cables masa
Lengueta macho doble
Q-563004
Placa asiento conexion masa
Q-563004
Tuerca M4
Q-163020

PRENSAESTOPAS

IG
R-663025
Tr
R-143017
Control R-663085
Mando R-663050
R-663032
T
R-143009
IH
R-663026
R-663041
HMP
R-663004
Z-100522
R-093012 UL
R-093004
Solo 20/11 20/21

3~50Hz 220V
1N~50Hz 240V
N T S R
R-663073
12µF
2µF
R-663072
CM CK
Motor: R-663034

CONTACTORES	20/21	10/11-10/21-20/11	20/11 TANICO
CC1, CC2, CK1, CK2, K1, K2	X-183011	① R-663031	X-183011
* CV1, CV2	X-183011	R-663031	R-663031

Esquema Eléctrico
20/21-20/11 R-143019
10/11-10/21 R-673058

VE
Z-103066
R-663055
R-143004
R-143005
R-143006
P-184011
R-073005
Z-263303
CV2 CC2 CV1 CC1
CK1 K1
R-663042
R-663031
R-503005
TRF
CM CK2 K2
20/21 10/11 20/11 10/21
Z-103035 Z-103035
R-143012 R-673010
R-143011 R-263003
R-143013 ——
Z-663096 Z-663096
N T S R
20/11 TANICO R-093010
10/11 10/21 R-673013
20/11 R-503000
Limitador
R-243016
R-663058
R-663013
10/11 10/21
R-663094
20/11 20/21
R-093021

	Esq mon E/P-101/102/201/202 3N~380V			R-143018	
N°	Pieza	Cant.	Material	Nº Clasificacion	Acabado
N°	Modificacion		Propuesta de	Fecha	Tolerancias generales
①	Sustituir R-143002 por X-183011 en hornos 2G/21		Egidon	00-07-25	<3± 50-100±
②	Introducir Rp		Mailo	02-02-28	5-25± >100±
③	Cambio denominación		J.A.Rico	26-02-2004	25-50± ○±

	Firma	Fecha		
Dibujado	JON	16/3/99	FAGOR	Mecanizado superficial
Proyectado			Fagor Industrial,Koop Elk, Mugaitua	
Comprobado				
Escala			HORNO MIXTO HME/P 10-11 / 10-21 HME/P 20-11 / 20-21	Plano numero HD-12681 -3
			Plano hau ez dakike erabiltzeko baliozko gisa bainoiz gibe	Sustituye al Nº HD-12491
				Sustituido por