PARTS LIST

for

KitchenAid®

5 QT STAND MIXER

PROFESSIONAL, EUROPEAN − LIFT

MODELS:

5KPM50EWH4 (White)
5KPM50EGR4 (Imperial Grey)

FOR CUSTOMER SATISFACTION ALWAYS USE
FACTORY SPECIFICATION PARTS

KITCHENAID ST. JOSEPH MICHIGAN 49085

6−06 Litho in U.S.A. (skr)
© 2006 KITCHENAID
Part No. 8212381

COLOR VARIATION PARTS

FOR MODEL: 5KPM50E_ _4

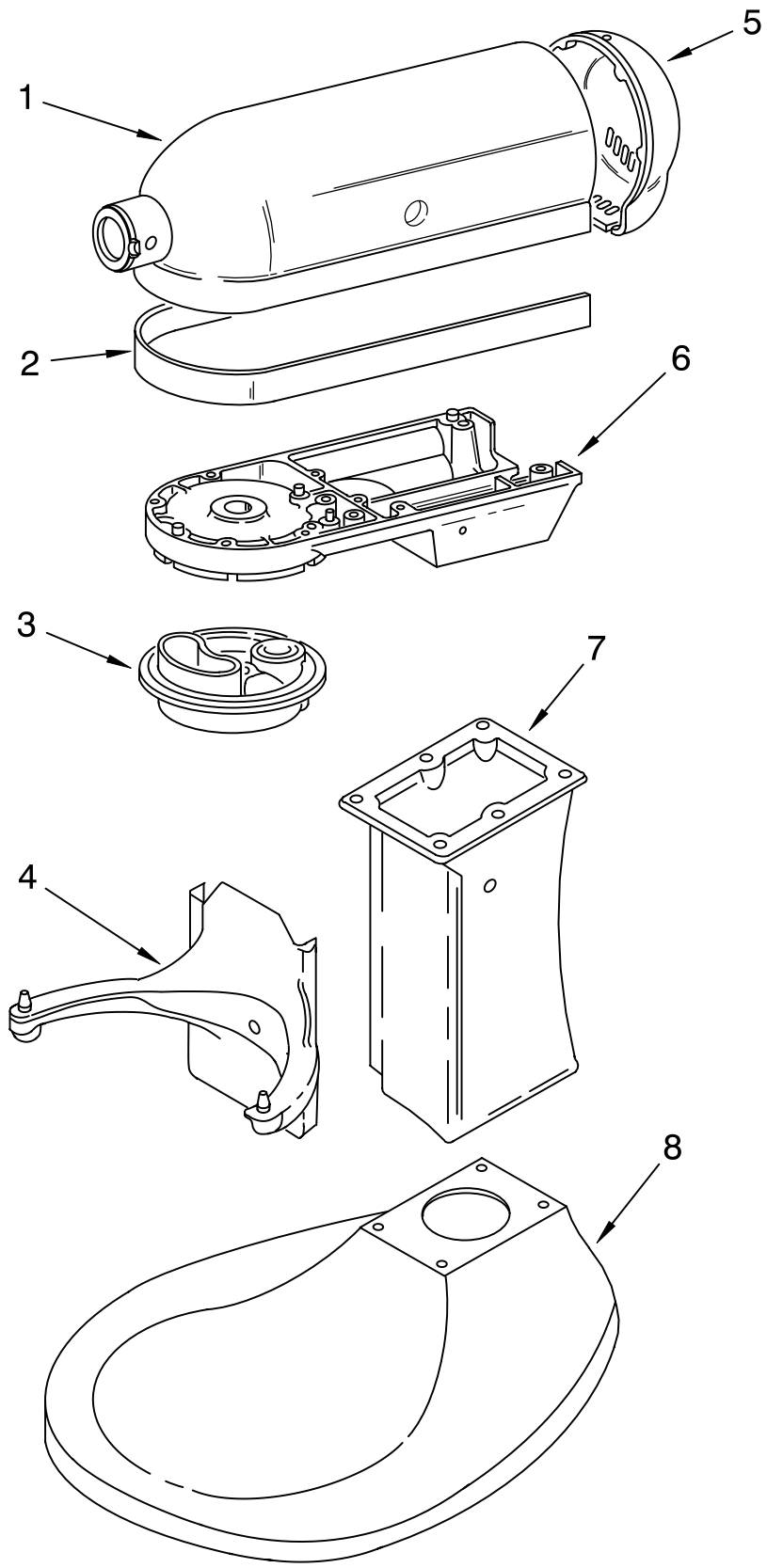

Illus. No.	Part No.	DESCRIPTION
		Colors Subject To Change. Any Color Not Listed is No Longer Available. If Additional Colors Are Added, This Page Will Be Updated.
1		Motor Housing
	240291−14	White
2		Trim Band
	9706977	Black
3		Planetary
	240286−1	White
4		Bowl Supp & Pins
	3179300	White
5		End Cover
	3179869	White
6		Lower Gearcase
	9701512	White
7		Column
	240148−4	White
8		Base & Foot Assembly
	3179280	White

FOR ORDERING INFORMATION REFER TO PARTS PRICE LIST

BASE AND PEDESTAL UNIT

FOR MODEL: 5KPM50E_ _4

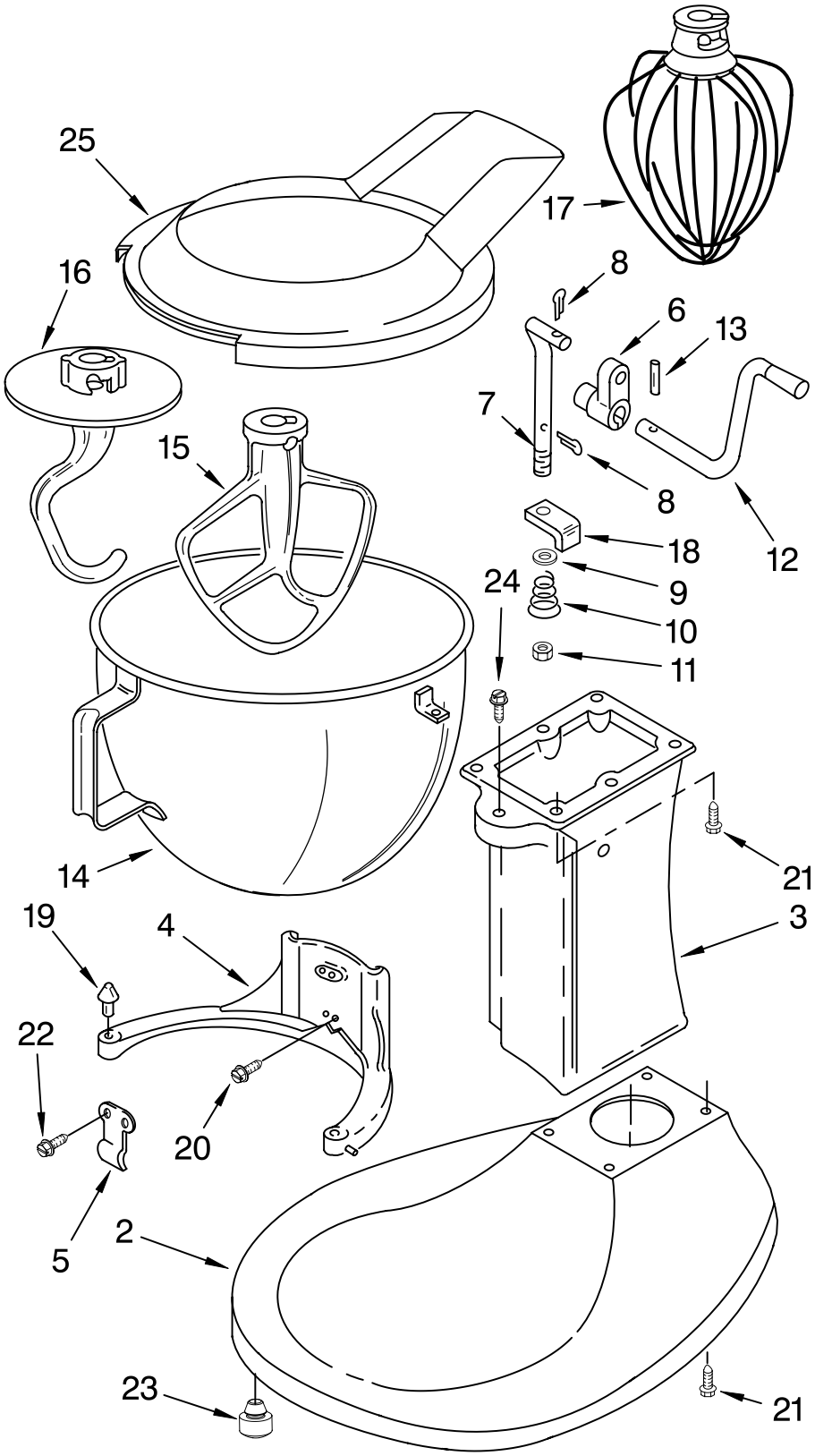

Illus. No.	Part No.	DESCRIPTION
1		Literature Parts
	9706978	Use & Care Guide
	8212381	Repair Parts List
2	**	Base & Foot Supports
3	**	Column Assembly
4	**	Bowl Supp & Pins
5	3182857	Latch, Bowl Spring
6	4162874	Arm, Bowl Lift
7	9085	Rod, Bowl Lift
8	9704608	Pin, Cotter
9	4159514	Washer
10	9237	Spring
11	8533907	Nut
12	9079	Handle, Bowl Lift
13	9703442	Pin, Roll
14	4162116	Bowl (5 Qt)
15	9707670	Beater, Flat
16	9708033	Hook, Dough
17	9704309	Whip, Wire
18	240169	Bracket, Bowl Lift
19	240185	Pin, Bowl Locating
20	3400018	Screw
21	240912	Screw, Special
22	3400024	Screw
23	9708649	Foot, Rubber
24	3182904	Screw
25	9706633	Shield, Pouring

** Refer to Page 3 Color Variation Parts

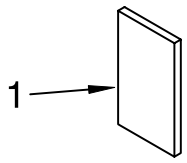

Literature Parts

FOR ORDERING INFORMATION REFER TO PARTS PRICE LIST

CASE, GEARING AND PLANETARY UNIT

FOR MODEL: 5KPM50E_ _4

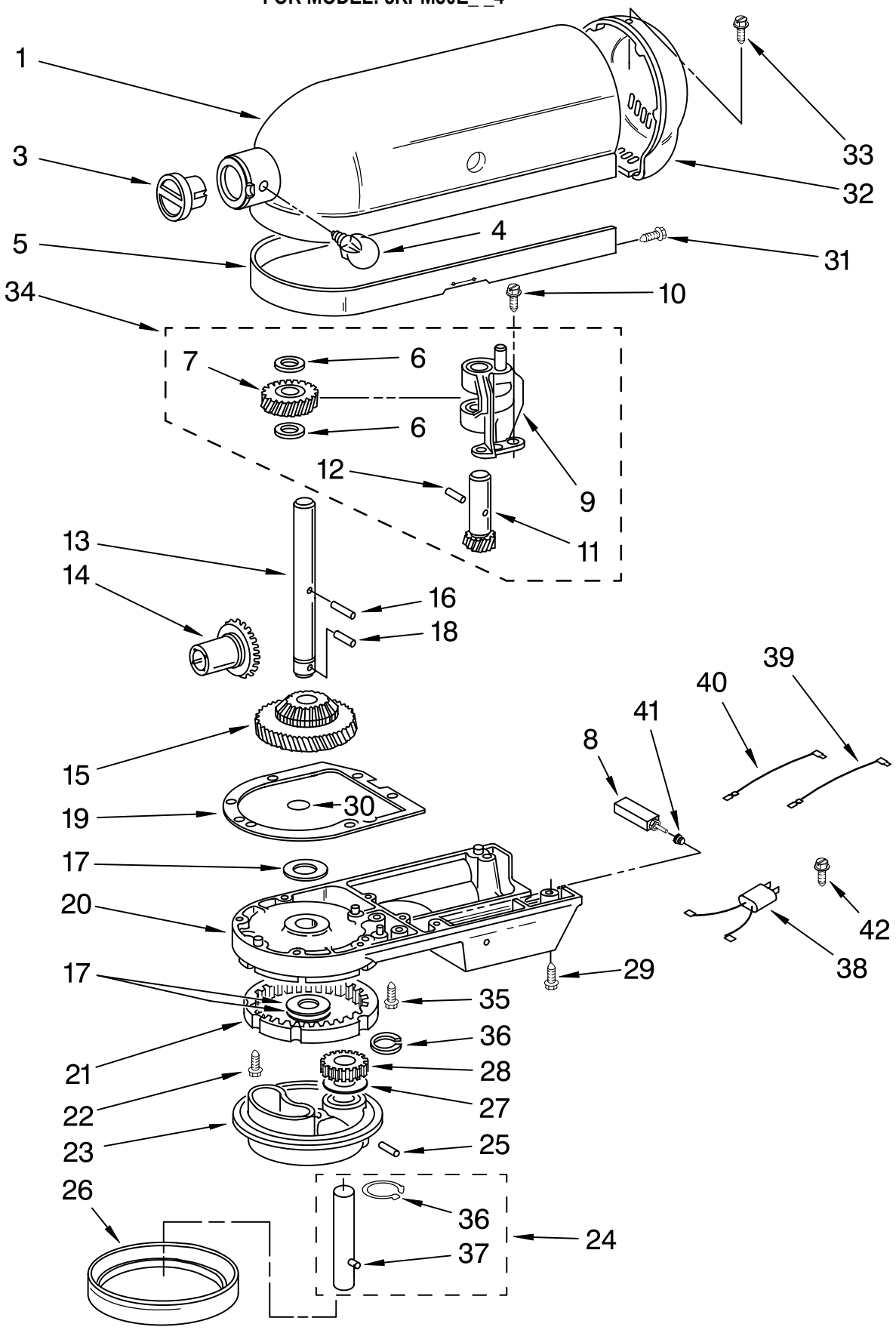

FOR ORDERING INFORMATION REFER TO PARTS PRICE LIST

CASE, GEARING AND PLANETARY UNIT

FOR MODEL: 5KPM50E_ _4

Illus. No.	Part No.	DESCRIPTION
1	**	Gearcase Motor Housing
3	242765−2	Cap, Attachment Hub
4	9709194	Screw, Thumb
5	**	Band, Trim
6	3180161	Washer, Fiber
7	4162897	Worm Gear
8	241287−1	Breaker, Circuit
9	240308	Gear, Worm Bracket & Bearing
10	3400022	Screw And L.W. Assy.
11	240210−2	Shaft & Pinion
12	9705444	Pin
13	240026	Shaft, Vertical Center
14	9705130	Gear, Attachment Hub Bevel
15	9709627	Bevel Pinion and Center Gear
16	240018−1	Pin (Vertical Center Shaft)
17	3180163	Washer
18	9705443	Pin
19	4162324	Gasket, Transmission Case
20	**	Lower Gear Case
21	9703904	Gear, Internal
22	103994	Screw, Special
23	**	Planetary
24	3184052	Shaft, Agitator
25	240018−1	Pin (Agitator Shaft Pinion
26	240285	Ring, Planetary Drip
27	9706090	Washer, Shim
28	9703903	Pinion, Gear (Agitator Shaft)
29	3400025	Screw
30	67500−55	"O" Ring
31	311932	Screw
32	**	Cover, End
33	4162914	Screw
34	240309−2	Gears, Worm & Pinion Assembly
35	3400026	Screw, Machine
36	9703438	Ring, Retaining
37	9704677	Pin, Groove
38	9705132	Filter, RFI
39	9702309	Lead (Circuit Breaker)
40	9704827	Lead (Breaker to Control Board)
41	9701663	Button, Reset
42	3400834	Screw

**Refer to Page 2 Color Variation Parts

FOR ORDERING INFORMATION REFER TO PARTS PRICE LIST

MOTOR AND CONTROL PARTS

FOR MODEL: 5KPM50E_ _4

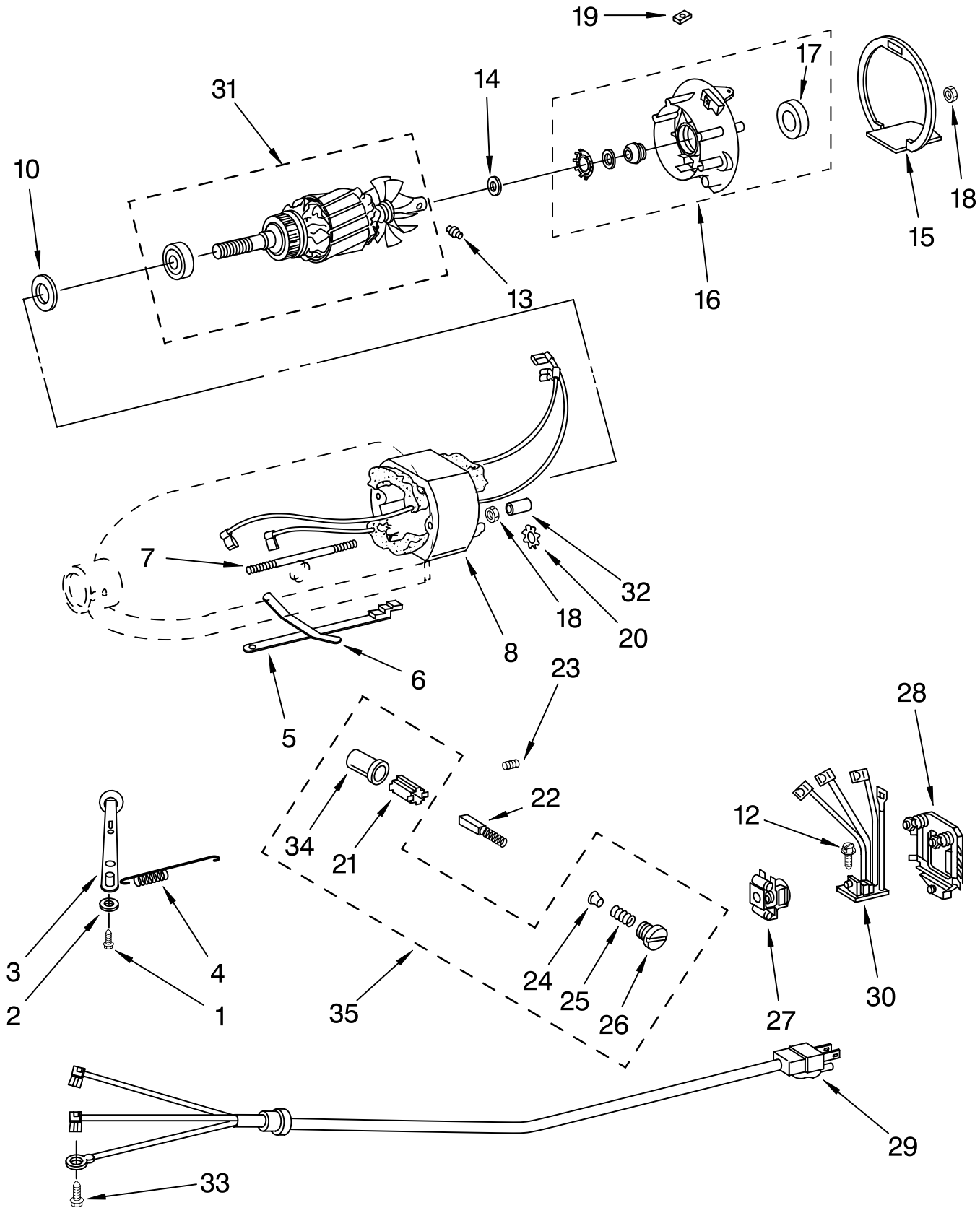

FOR ORDERING INFORMATION REFER TO PARTS PRICE LIST

MOTOR AND CONTROL PARTS

FOR MODEL: 5KPM50E_ _4

Illus. No.	Part No.	DESCRIPTION
1	110679	Screw, Pivot
2	116241	Washer, Spring
3	9709276	Lever, Control And Stud
4	3183680	Spring, Control Plate
5	3184176	Speed Link & Cam
6	240205	Spring, Flat
7	240769	Screw, Stator
8	9701670	Field Assembly
10	9704324	Washer, Ball Bearing (Front)
12	W10068260	Screw
13	16998	Stud, Governor Drive
14	3180162	Washer, Spacing
15	9701501	Seal, End
16	3180526	Bracket, Bearing Assembly
17	3180238	Washer, Felt
18	8533905	Nut
19	9701584	Seal, Foam
20	W10068270	Washer
21	240680	Insert, Brush Holder
22	9706416	Brush & Spring Assembly
23	9707926	Screw, Set
24	116286	Cap, Spring Seat
25	116287	Spring, Cap
26	3184212	Cap, Brush Holder
27	17830	Governor Assembly
28	240904−2	Control Plate Assembly
29	9702313	Cord, Power (TUV) White
30	9706596	Phase Control Board
31	9708316	Armature & Bearing Assy (240V)
32	4162634	Sleeve, Motor Stud
33	3184609	Screw, Self
34	3179908	Housing, Brush Holder
35	4162546	Brush Holder Assy

ACCESSORY PARTS

FOR MODEL: 5KPM50E_ _4

Illus. No.	Part No.	DESCRIPTION
	4164778	Mixer Attachment Pak (Includes Food Grinder (FG−A), Food Strainer (FVSP), And Vegetable Slicer, (RVS−A) (FPP−A)
	4164749	Food Grinder (FG−A)
	8211924	Grain Mill (KGMA)
	4164768	Pasta Maker And Food Grinder (Includes SNP Pasta Maker Plates) (SN/FG−A)
	4164775	Fruit/Vegetable Strainer Parts (Use With FG−A Model Only) (FVSP)
	4164750	Rotor Slicer/Shredder (With 4 Standard Cones) Fine Shredder, Coarse Shredder, Thick Slicer, And Thin Slicer (RVS−A)
	3177975	Pouring Shield (KPS2CL)
	4164824	Pasta Maker Plates (SNP−A)
	4164774	Fruit/Vegetable Strainer And Food Grinder (FVS/FG−A)
	3180616	Cover, Decorative (Cotton Polyester)
	4162838	Food Tray (FT)
	4164748	Juicer (JE)
	4164747	Can Opener (CO)
	4164803	Sausage Stuffer Kit (SSA)
	4162154	Water Jacket (K5AWJ)
	3177925	Bowl Cover, Plastic Non−Sealing
	4176100	5 Qt. Bowl, Polished Stainless Steel
	4164839	Speed Disc (Service Tool)
	4160588	Grease, Planetary
	9707963	Ice Cream Maker (KICA)