DESPIECE TECNICO

Cocinas a Gas
Fourneaux a Gaz
Gas Cookers
Gas Herde
Cucine a Gas

GAMA 900

Modelos:

CGF 9-120 I
CGF 9-120 D
CGF 9-121 I
CGF 9-121 D

Junio 2009 June

Fagor Industrial

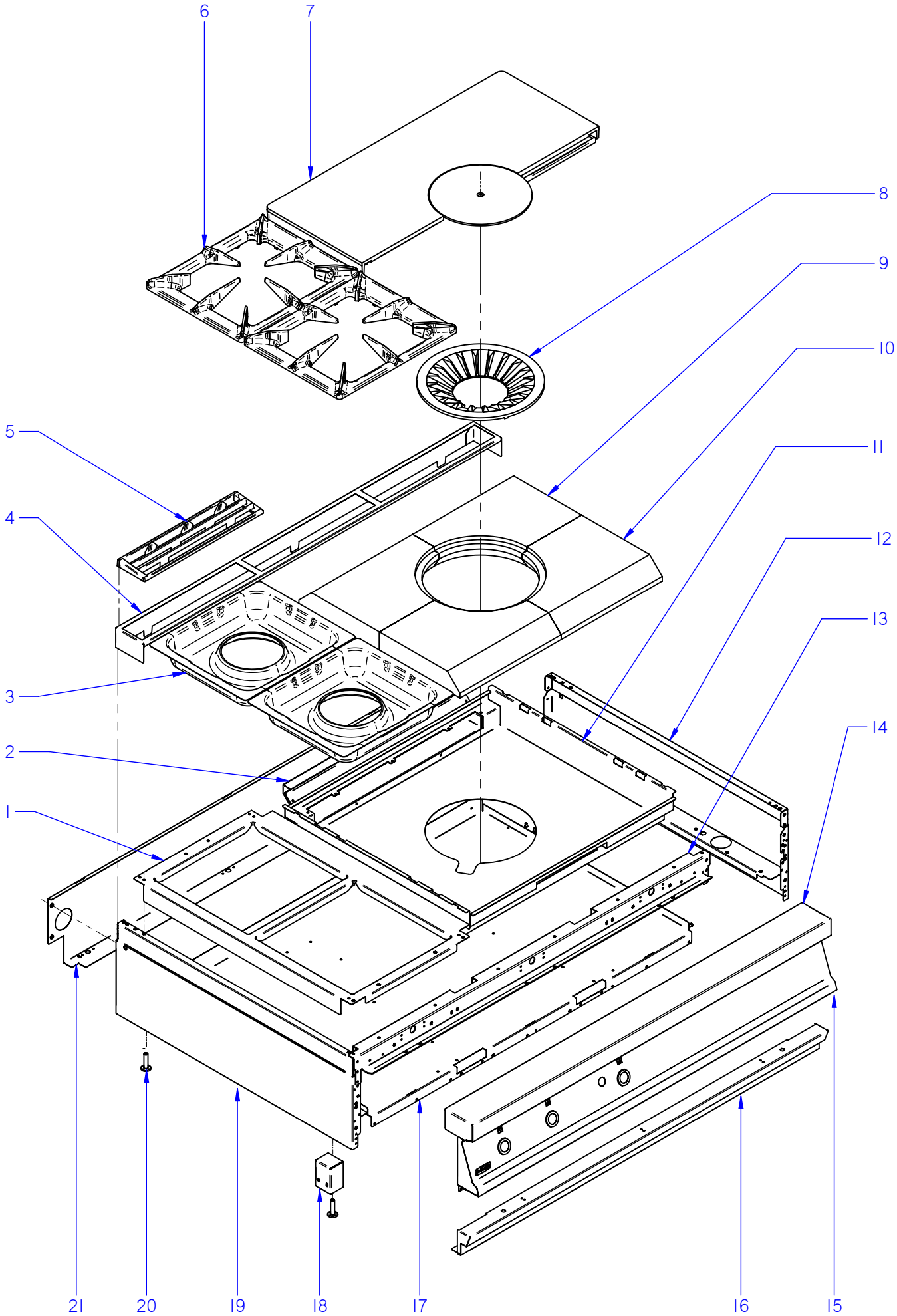

ITEM MARCADO EN COLOR = REPUESTO RECOMENDADO
COLOURED ITEM = RECOMMENDED SPARE PART

N plano	Firma	Fecha	Aparato	MUEBLE	Lamina	
C-2365		2009-06	COCINA CGF9-120		1	Fagor Industrial S.Coop. FAGOR Oñate

MOD.	COCINAS	ZONA	MUEBLE / UNIT	PLANO	C-2365

ITEM	CODIGO	DENOMINACION	TEXTO	CGF9-120 I	CGF9-120 D						NOTAS
1	U205411000	MESA CGF9-121 I	BENCH CGF9-121 I	1	_						
1	U205410000	MESA CGF9-121 D	BENCH CGF9-121 D	_	1						
	Q152004000	TORNIL, APLASTADO M5x13 A304	FLAT HEADED BOLT M5x13 A304	10	10						
	Q221342000	REMACHE EXAGONAL M5	HEXAGONAL RIVET M5	4	4						
2	U615467000	ANTERIOR DE CHIMENEA	FLUEPIPE FRONT	1	1						
S/Nº	U615466000	POSTERIOR CHIMENEA	REAR FLUEPIPE	1	1						
	Q419005000	REMACHE 4x8 ALMG3 / ALUMINIO	RIVET 4X8 ALMG3 / ALUMINIUM	11	11						
3	U025473000	BACINETA QUEMADOR G900	BASIN BURNER G900	2	2						
4	R205440000	SOPORTE EMBELLECEDOR 1,5 M	TRIM SUPPORT 1.5 M	1	1						
5	R205425000	EMBELLECEDOR ESMALTE	ENAMEL TRIM	3	3						
6	U035409000	PARRILLA GAMA 900	GRILL 900 RANGE	2	2						
7	U025455000	CONJ.MEDIA PLACA + RODELA	MEDIUM PLATE + GUIDE RING	2	2						
8	U195420000	RODELA DIFUSORA FG-8	DISPENSER GUIDE RING FG-8	1	1						
9	U615408000	REFRACTARIO DERECHO	RIGHT REFRACTORY	2	2						
10	U615407000	REFRACTARIO IZQUIERDO	LEFT REFRACTORY	2	2						
11	U615464000	CAJON REFRACTARIO	REFRACTORY DRAWER	1	1						
12	R062810000	PANEL LATERAL DERECHO G900	RIGHT SIDE PANEL G900	1	1						
	Q221342000	REMACHE EXAGONAL M5	HEXAGONAL RIVET M5	8	8						
	Q221343000	REMACHE EXAGONAL M6	HEXAGONAL RIVET M6	1	1						
13	U032625000	ESCUA INTER AMAR ANTE 1,5 M	BRACKET INTER FASTE. FRONT	1	1						
	Q221342000	REMACHE EXAGONAL M5	HEXAGONAL RIVET M5	4	4						
	Q012032000	TORNILLO EXAGONAL M5x15	HEXAGONAL BOLT M5x15	4	4						
	Q152004000	TORNIL, APLASTADO M5x13 A304	FLAT HEADED BOLT M5x13 A304	6	6						
	Q302022000	ARANDELA 16x6x1,2 A304	WASHER 16x6x1.2 A304	6	6						
14	U035406000	ANTERIOR MESA 1,5 M	BENCH FRONT 1.5 M	1	1						
	Q152004000	TORNIL, APLASTADO M5x13 A304	FLAT HEADED BOLT M5x13 A304	2	2						
	Q302022000	ARANDELA 16x6x1,2 A304	WASHER 16x6x1.2 A304	2	2						

MOD.	COCINAS	ZONA	MUEBLE / UNIT	PLANO	C-2365

ITEM	CODIGO	DENOMINACION	TEXTO	CGF9-120 I	CGF9-120 D						NOTAS
15	U082808000	PORTAMANDOS COM. CGF9-120I	CONTROL HOLDER CGF9-120I	1	_						
15	U212808000	PORTAMANDOS COM. CGF9-120D	CONTROL HOLDER CGF9-120D	_	1						
	U022836000	ESCUDO FAGOR	FAGOR EMBLEM	1	1						
	Q221023000	CLIP SUJECIÓN RÁPIDA Ø5	RAPID CONNECT CLIP Ø5	2	2						
	Q152004000	TORNIL, APLASTADO M5x13 A304	FLAT HEADED BOLT M5x13	4	4						
16	U032809000	ZOCALO 1,5 M	SKIRTING 1.5 M	1	1						
	Q419005000	REMACHE 4x8 ALMG3 / ALUMINIO	RIVET 4X8 ALMG3 / ALUMINIUM	2	2						
17	U032622000	BASE 1,5 M GAS	BASE 1.5 M GAS	1	1						
	Q419005000	REMACHE 4x8 ALMG3 / ALUMINIO	RIVET 4X8 ALMG3 / ALUMINIUM	16	16						
18	H012805000	ESCUADRA AMARRE PATA	LEG FASTENING BRACKET	2	2						
	Q162030000	TUERCA EXAGONAL M5	HEXAGONAL NUT M5	4	4						
	Q302022000	ARANDELA 16x6x1,2 A304	WASHER 16x6x1.2 A304	4	4						
	Q221345000	REMACHE EXAGONAL M10	HEXAGONAL RIVET M10	2	2						
19	R062811000	PANEL LATERAL IZQUIERDO G900	LEFT SIDE PANEL G900	1	1						
	Q221342000	REMACHE EXAGONAL M5	HEXAGONAL RIVET M5	3	3						
	Q221343000	REMACHE EXAGONAL M6	HEXAGONAL RIVET M6	5	5						
20	Z200107000	PATA	LEG	4	4						
	Q221345000	REMACHE EXAGONAL M10	HEXAGONAL RIVET M10	4	4						
S/Nº	X010503000	CIERRE MUELLE	LOCK SPRING	4	4						
	Q419007000	REMACHE TUBULAR C/V Ø2x6	TUBULAR RIVET C/V Ø2x6	8	8						
21	U572850000	PANEL POSTERIOR 1,5 M	REAR PANEL 1.5 M	1	1						
	Q419005000	REMACHE 4x8 ALMG3 / ALUMINIO	RIVET 4X8 ALMG3 / ALUMINIUM	4	4						
	Q302022000	ARANDELA 16x6x1,2 A304	WASHER 16x6x1.2 A304	4	4						

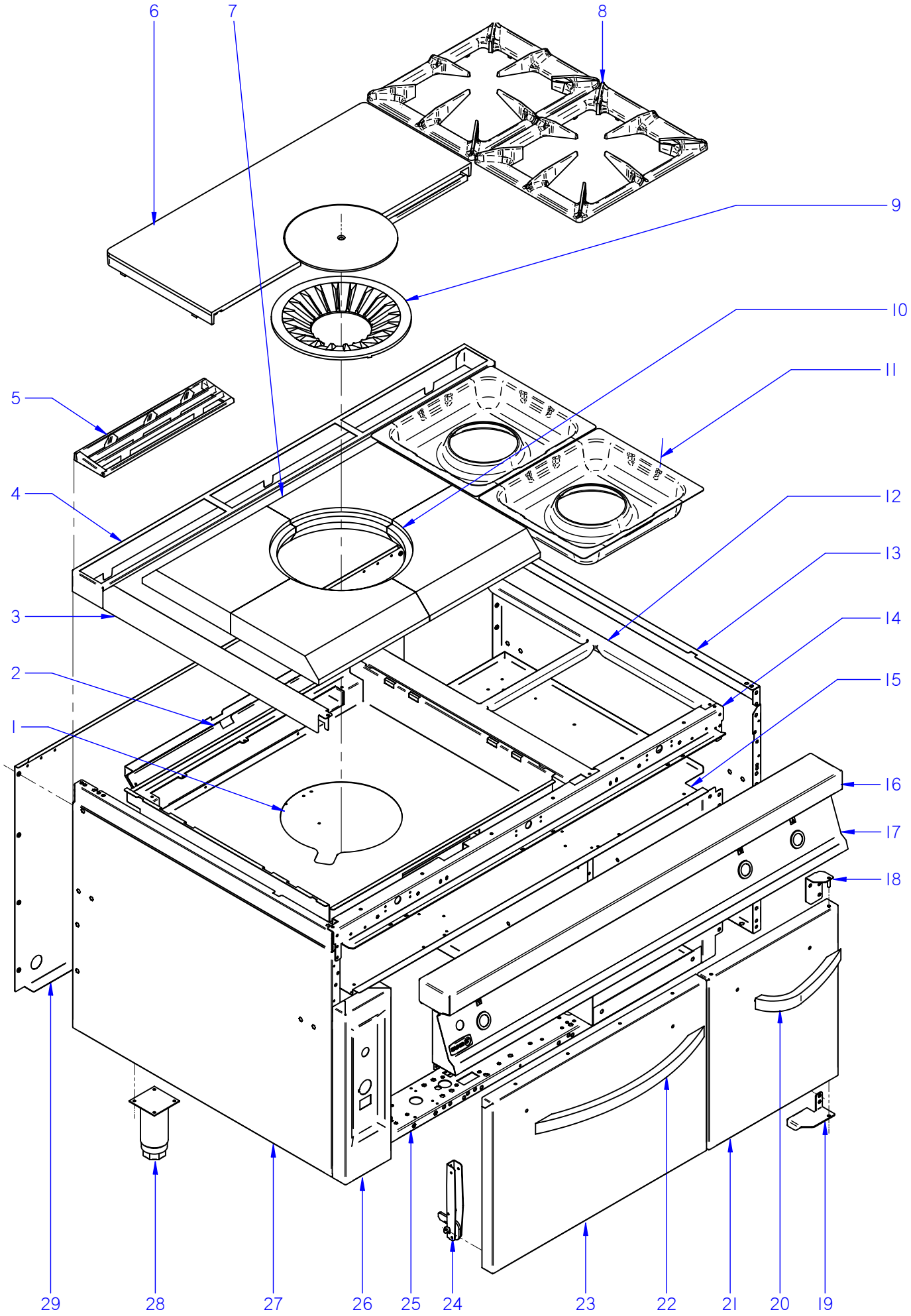

ITEM MARCADO EN COLOR = REPUESTO RECOMENDADO
COLOURED ITEM = RECOMMENDED SPARE PART

N plano	Firma	Fecha	Aparato	MUEBLE	Lamina	
C-2366		2009-06	COCINA CGF9-121		2	Fagor Industrial S.Coop. FAGOR Oñate

MOD.	COCINAS	ZONA	MUEBLE / UNIT	PLANO	C-2366

ITEM	CODIGO	DENOMINACION	TEXTO	CGF9-121 I	CGF9-121 D						NOTAS
1	U615464000	CAJON REFRACTARIO	REFRACTORY DRAWER	1	1						
2	U615467000	ANTERIOR DE CHIMENEA	FLUEPIPE FRONT	1	1						
S/Nº	U615466000	POSTERIOR CHIMENEA	REAR FLUEPIPE	1	1						
	Q419005000	REMACHE 4x8 ALMG3 / ALUMINIO	RIVET 4X8 ALMG3 / ALUMINIUM	11	11						
3	R152807000	LATERAL DE MESA	SIDE BENCH	2	2						
4	R205440000	SOPORTE EMBELLECEDOR 1,5 M	TRIM SUPPORT 1.5 M	1	1						
5	R205425000	EMBELLECEDOR ESMALTE	ENAMEL TRIM	3	3						
6	U025455000	CONJ.MEDIA PLACA + RODELA	MEDIUM PLATE + GUIDE RING	2	2						
7	U615408000	REFRACTARIO DERECHO	RIGHT REFRACTORY	2	2						
8	U035409000	PARRILLA GAMA 900	GRILL 900 RANGE	2	2						
9	U195420000	RODELA DIFUSORA FG-8	DISPENSER GUIDE RING FG-8	1	1						
10	U615407000	REFRACTARIO IZQUIERDO	LEFT REFRACTORY	2	2						
11	U025473000	BACINETA QUEMADOR G900	BASIN BURNER G900	2	2						
12	U205411000	MESA CGF9-121 I	BENCH CGF9-121 I	1	_						
12	U205410000	MESA CGF9-121 D	BENCH CGF9-121 D	_	1						
	Q152004000	TORNIL, APLASTADO M5x13 A304	FLAT HEADED BOLT M5x13 A304	10	10						
	Q221342000	REMACHE EXAGONAL M5	HEXAGONAL RIVET M5	4	4						
13	X162814000	PANEL LATERAL DERECHO G9-00	RIGHT SIDE PANEL G9-00	1	1						
	Q221343000	REMACHE EXAGONAL M6	HEXAGONAL RIVET M6	11	11						
	Q221342000	REMACHE EXAGONAL M5	HEXAGONAL RIVET M5	11	11						
	Q012043000	TORNILLO EXAGONAL M6x20 A304	HEXAGONAL BOLT M6x20 A304	2	2						
	Q152004000	TORNILLO APLASTADO M5x13 A304	FLAT HEADED BOLT M5x13 A304	3	3						
14	U032625000	ESCUA INTER AMAR ANTE 1,5 M	BRACKET INTER FASTE. FRONT	1	1						
	Q221342000	REMACHE EXAGONAL M5	HEXAGONAL RIVET M5	4	4						
	Q012032000	TORNILLO EXAGONAL M5x15	HEXAGONAL BOLT M5x15	4	4						
	Q152004000	TORNIL, APLASTADO M5x13 A304	FLAT HEADED BOLT M5x13 A304	6	6						
	Q302022000	ARANDELA 16x6x1,2 A304	WASHER 16x6x1.2 A304	6	6						
15	U022626000	BASE BANDEJAS 1,5 M	TRAY BASE 1.5 M	1	1						
	Q419005000	REMACHE 4x8 ALMG3 / ALUMINIO	RIVET 4X8 ALMG3 / ALUMINIUM	2	2						
	Q152004000	TORNIL, APLASTADO M5x13 A304	FLAT HEADED BOLT M5x13 A304	3	3						

MOD.	COCINAS	ZONA	MUEBLE / UNIT	PLANO	C-2366

ITEM	CODIGO	DENOMINACION	TEXTO	CGF9-121 I	CGF9-121 D						NOTAS
16	U035406000	ANTERIOR MESA 1,5 M	BENCH FRONT 1.5 M	1	1						
	Q152004000	TORNIL, APLASTADO M5x13 A304	FLAT HEADED BOLT M5x13 A304	2	2						
	Q302022000	ARANDELA 16x6x1,2 A304	WASHER 16x6x1.2 A304	2	2						
17	U082806000	PORTAMANDOS COMP. CGF9-121I	CONTROL HOLDER CGF9-121I	1	_						
17	U212807000	PORTAMANDOS COMP. CGF9-121D	CONTROL HOLDER CGF9-121D	_	1						
	U022836000	ESCUDO FAGOR	FAGOR EMBLEM	1	1						
	Q221023000	CLIP SUJECIÓN RÁPIDA Ø5	RAPID CONNECT CLIP Ø5	2	2						
	Q152004000	TORNIL, APLASTADO M5x13 A304	FLAT HEADED BOLT M5x13 A304	4	4						
18	U032619000	BISAGRA SUPERIOR DERECHA	UPPER RIGHT HINGE	1	1						
	Q221342000	REMACHE EXAGONAL M5	HEXAGONAL RIVET M5	1	1						
19	U020511000	BISAGRA DERECHA INFERIOR	LOWER RIGHT HINGE	1	1						
	Q232040000	ARANDELA A6	WASHER A6	1	1						
	X960504000	TORNILLO DE GIRO M8	ROTATION BOLT M8	1	1						
	Q012042000	TORNILLO EXAGONAL M6x15 A304	HEXAGONAL BOLT M6x15 A304	1	1						
	Q302022000	ARANDELA 16x6x1,2 A304	WASHER 16x6x1.2 A304	1	1						
20	U020507000	ASA ARMARIO COMPLETO G900	FULL CUPBOARD HANDLE G900	1	1						
	Q162040000	TUERCA EXAGONAL M6	HEXAGONAL NUT M6	1	1						
	Q302022000	ARANDELA 16x6x1,2 A304	WASHER 16x6x1.2 A304	1	1						
21	U020536000	PUERTA LATERAL G900	SIDE DOOR G900	1	1						
	Q419005000	REMACHE 4x8 ALMG3 / ALUMINIO	RIVET 4X8 ALMG3 / ALUMINIUM	1	1						
S/Nº	X960501000	IMAN	MAGNET	2	2						
S/Nº	X960502000	FIJACION IMAN	MAGNET ATTACHMENT	2	2						
	Q012021000	TORNILLO EXAGONAL M4X10	HEXAGONAL BOLT M4x10	2	2						
	Q232020000	ARANDELA A4	WASHER A4	2	2						
22	U020504000	ASA DE HORNO COMPLETA G900	COMPL. OVEN HANDLE G900	1	1						
	Q012041000	TORNILLO EXAGONAL M6x10	HEXAGONAL BOLT M6x10	2	2						
	Q302022000	ARANDELA 16x6x1,2 A304	WASHER 16x6x1.2 A304	2	2						
23	U910501000	PUERTA DE HORNO	OVEN DOOR	1	1						
24	U020528000	BISAGRA CIERRE HORNO	OVEN LOCK HINGE	2	2						
	Q152022000	TORNILLO M6x8	BOLT M6x8	6	6						
25	U032615000	LISTON SOPORTE PATAS 1,5 M	LEG SUPPORT STRIP 1.5 M	2	2						

MOD.	COCINAS	ZONA	MUEBLE / UNIT	PLANO	C-2366

ITEM	CODIGO	DENOMINACION	TEXTO	CGF9-121 I	CGF9-121 D						NOTAS
25	U032615000	LISTON SOPORTE PATAS 1,5 M	LEG SUPPORT STRIP 1.5 M	2	2						
26	U022843000	PORTAMANDOS LATERAL HORNO	OVEN SIDE CONTROL HOLDER	1	1						
	Q152004000	TORNIL, APLASTADO M5x13 A304	FLAT HEADED BOLT M5x13 A304	2	2						
27	X162813000	PANEL LATERAL IZQUIERDO G900	LEFT SIDE PANEL G900	1	1						
	Q221343000	REMACHE EXAGONAL M6	HEXAGONAL RIVET M6	11	11						
	Q221342000	REMACHE EXAGONAL M5	HEXAGONAL RIVET M5	11	11						
	Q012043000	TORNILLO EXAGONAL M6x20 A304	HEXAGONAL BOLT M6x20 A304	2	2						
	Q152004000	TORNILLO APLASTADO M5x13 A304	FLAT HEADED BOLT M5x13 A304	3	3						
28	X260151000	PATA REGULABLE	ADJUSTABLE LEG	4	4						
	Q411304000	REMACHE AVIBULB Ø 4,8	AVIBULB RIVET Ø 4.8	16	16						
29	U582852000	PANEL POSTERIOR 1,5 M	REAR PANEL 1.5 M	1	1						
	Q419005000	REMACHE 4x8 ALMG3 / ALUMINIO	RIVET 4X8 ALMG3 / ALUMINIUM	8	8						

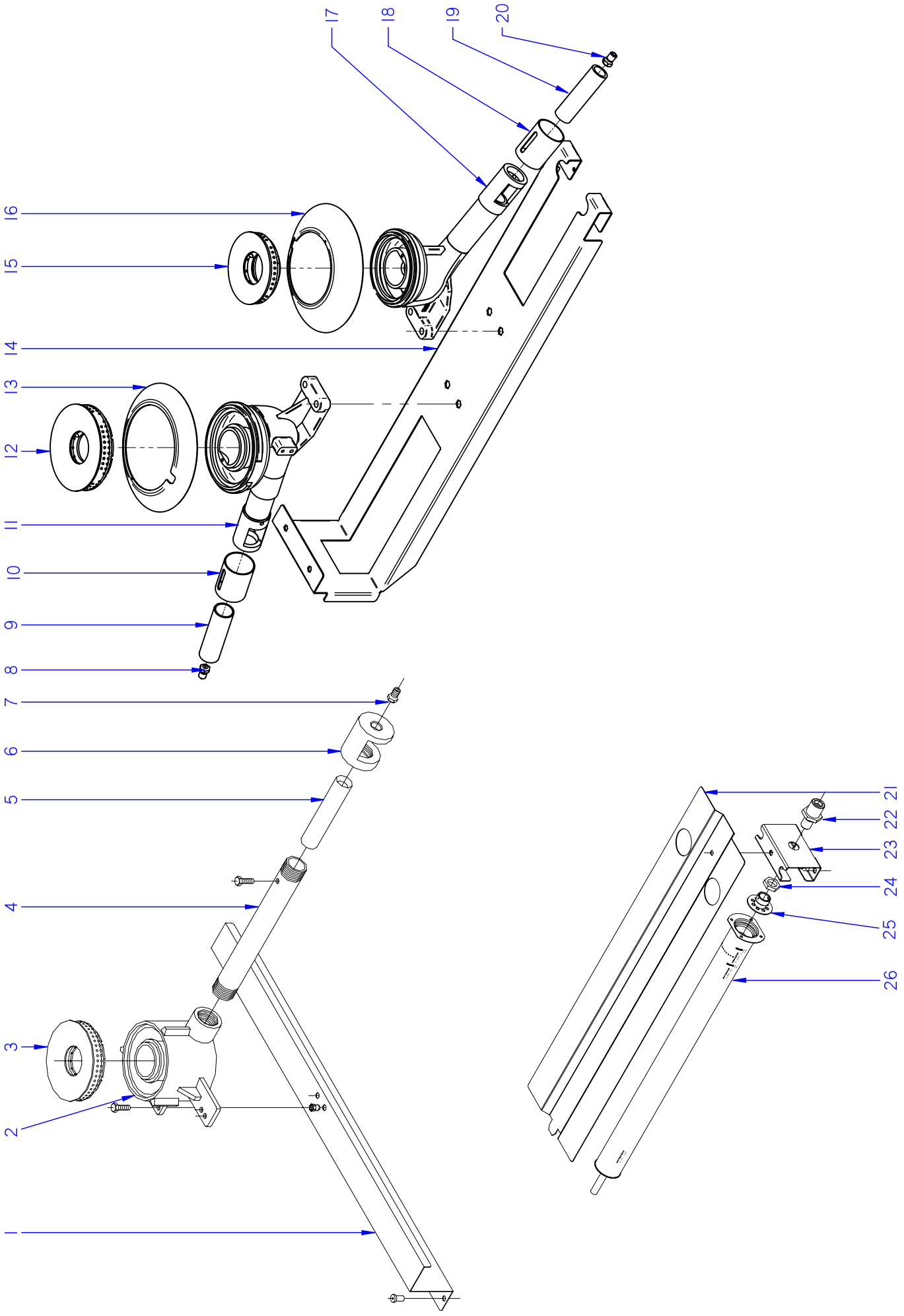

ITEM MARCADO EN COLOR = REPUESTO RECOMENDADO
COLOURED ITEM = RECOMMENDED SPARE PART

N plano	Firma	Fecha	Aparato		Lamina	
C-2367		2009-06	QUEMADORES COCINA CGF9-120 / CGF9-121		3	Fagor Industrial S.Coop. FAGOR Onate

MOD.	COCINAS	ZONA	QUEMADORES / BURNERS	PLANO	C-2367

ITEM	CODIGO	DENOMINACION	TEXTO	CGF9-120	CGF9-121						NOTAS
1	U612653000	SOPORTE QUEMADOR DE MESA	BURNER SUPPORT STRIP	1	1						
	Q419005000	REMACHE 4x8 ALMG3 / ALUMINIO	RIVET 4X8 ALMG3 / ALUMINIUM	2	2						
	Q221342000	REMACHE EXAGONAL M5	HEXAGONAL RIVET M5	2	2						
2	U195702000	CUERPO DE QUEMADOR MECANI.	BURNER BODY	1	1						
3	U195701500	QUEMADOR 10850 KCAL. PINTADO	BURNER10850 KCAL.	1	1						
4	U195703000	TUBO MEZCLADOR	MIXING PIPE	1	1						
	Q223019000	TUERCA 3/8 GAS LATÓN	NUT 3/8 GAS BRASS	1	1						
	Q153002000	TORNILLO TAPON	CAP BOLT	1	1						
5	U775701000	VENTURI QUEMADOR	VENTURI QUEMADOR	1	1						
	Q012031000	TORNILLO EXAGONAL M5x10 A304	HEXAGONAL BOLT M5x10 A304	1	1						
6	U615700500	CAMARA DE MEZCLA PINTADA	PAINT MIXING CHAMBER	1	1						
7	R302400000	TOBERA Ø 1,65 BP	NOZZLE Ø 1,65 BP	1	1						
7	U054400000	TOBERA Ø 2,50 GN	NOZZLE Ø 2,50 GN	1	1						
8	631000000	TOBERA Ø 1,40 BP (8000)	NOZZLE Ø 1.40 BP (8000)	1	1						
8	U112402000	TOBERA Ø 2,10 GN (8000)	NOZZLE Ø 2,10 GN (8000)	1	1						
9	U565700000	VENTURI QUEMADOR 8000	VENTURI BURNER 8000	1	1						
10	U265702000	REGULADOR AIRE	AIR CONTROLLER	1	1						
	Q132054000	VARILLA ROSCADA M6 x 12	THREADED ROD M6 x 12	1	1						
	Q162004000	TUERCA EXAGONAL M6	HEXAGONAL NUT M6	1	1						
11	U025710000	CUERPO QUEMADOR 8000 Kcal/H	BURNER BODY 8000 Kcal/h	1	1						
12	U135702500	QUEMADOR 8000	BURNER 8000	1	1						
	Q371026000	MANGUITO DE SUJECION Ø 4x14	HANDLE Ø 4x14	1	1						
	Q012045000	TORNILLO EXAGONAL M6x30 A304	HEXAGONAL BOLT M6x30 A304	1	1						
	Q302022000	ARANDELA 16x6x1,2 A304	WASHER 16x6x1.2 A304	1	1						
	U565011000	TUERCA GUIA	GUIDE NUT	1	1						
13	U915703000	PROTEC. PILOTO QUEMAD. 7000	BURNER PILOT GUARD 7000	1	1						
	Q372004000	PASADOR ELASTICO 5x20	ELASTIC PIN 5x20	2	2						
14	U022617000	LISTON SOP. QUEMADOR G900	BURNER SUPPORT STRIP G900	1	1						
	Q221343000	REMACHE EXAGONAL M6	HEXAGONAL RIVET M6	4	4						
	Q221342000	REMACHE EXAGONAL M5	HEXAGONAL RIVET M5	4	4						

MOD.	COCINAS	ZONA	QUEMADORES / BURNERS	PLANO	C-2367

ITEM	CODIGO	DENOMINACION	TEXTO	CGF9-120	CGF9-121						NOTAS
15	U445731500	QUEMADOR 4000 (00545-010)	BURNER 4000 (00545-010)	1	1						
	Q012045000	TORNILLO EXAGONAL M6x30 A304	HEXAGONAL BOLT M6x30 A304	1	1						
	Q302022000	ARANDELA 16x6x1,2 A304	WASHER 16x6x1.2 A304	1	1						
16	U025712000	PROTEC. PILOTO QUEMAD. 4000	BURNER PILOT GUARD 4000	1	1						
17	U025709000	CUERPO QUEMADOR 4000Kcal/H	BURNER BODY 4000 Kcal/H	1	1						
	Q371026000	MANGUITO DE SUJECION Ø 4x14	HANDLE Ø 4x14	1	1						
18	U265702000	REGULADOR AIRE	AIR CONTROLLER	1	1						
	Q132042000	VARILLA ROSCADA M6 x 15	THREADED ROD M6 x 15	1	1						
	Q162004000	TUERCA EXAGONAL M6	HEXAGONAL NUT M6	1	1						
19	U125720000	VENTURI QUEMADOR 4000 kcl	VENTURI BURNER 4000 kcl	1	1						
20	X312400000	TOBERA Ø 1,10 BP (4000)	NOZZLE Ø 1.10 BP (4000)	1	1						
20	R302400000	TOBERA Ø 1,65 GN (4000)	NOZZLE Ø 1.65 GN (4000)	1	1						
21	U915613000	DEFLECTOR QUEMADOR HORNO	OVEN BURNER DEFLECTOR	_	2						
	Q152004000	TORNIL, APLASTADO M5x13 A304	FLAT HEADED BOLT M5x13 A304	_	1						
	Q302022000	ARANDELA 16x6x1,2 A304	WASHER 16x6x1.2 A304	_	1						
22	X505724000	MANGUITO PORTATOBERAS	NOZZLE HOLDER SLEEVE	_	1						
23	U105635000	AMARRE QUEMADOR HORNO(HG)	OVEN BURNER FASTENING (HG)	_	1						
	Q012031000	TORNILLO EXAGONAL M5x10 A304	HEXAGONAL BOLT M5x10 A304	_	2						
	Q222041000	REMACHE EXAGONAL M4 (INOX)	HEXAGONAL RIVET M4 (INOX)	_	4						
24	Q223019000	TUERCA 3/8 GAS LATÓN	NUT 3/8 GAS BRASS	_	1						
25	X505013000	REGULADOR DE AIRE POLIDORO	POLIDORO AIR CONTROL	_	1						
	Q031322000	TORNILLO ALOMADO M4X15	CURVED SCREW M4X15	_	1						
26	U105701000	QUEMADOR HORNO	OVEN BURNER.	_	1						
	Q042022000	TORNILLO AVELLLANADO M4X15	COUNTERSUNK BOLT M4x15	_	4						
S/Nº	U052401000	TOBERA Ø 1,45 BP	NOZZLE Ø 1.45 BP	_	1						
S/Nº	U262400000	TOBERA Ø 2,15 GN	NOZZLE Ø 2.15 GN	_	1						

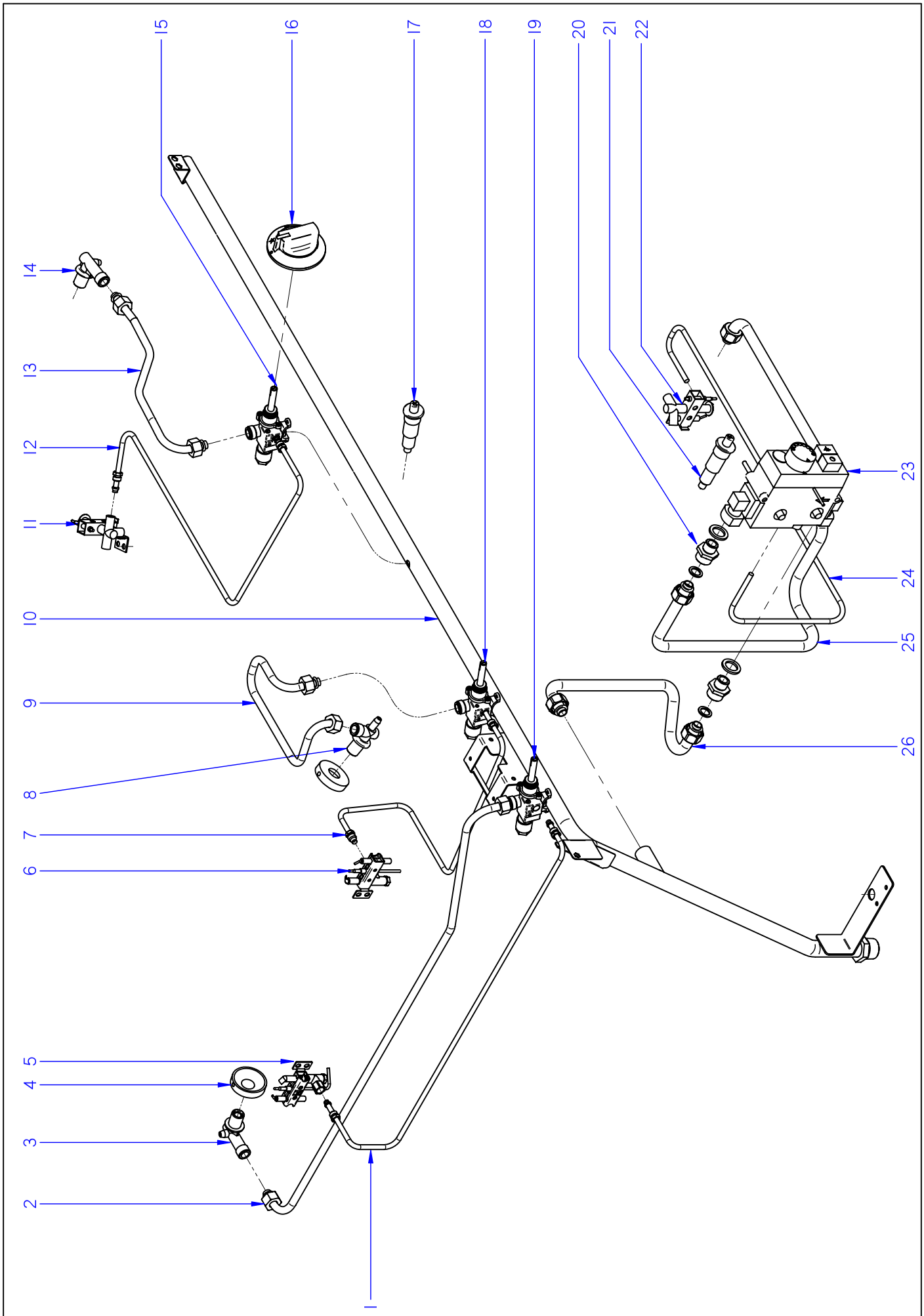

ITEM MARCADO EN COLOR = REPUESTO RECOMENDADO
COLOURED ITEM = RECOMMENDED SPARE PART

N plano	Firma	Fecha	Aparato		Lamina	
C-2368		2009-06	CONDUCCIONES Y GRIFOS COCINA CGF9-120 / CGF9-121		4	Fagor Industrial S.Coop. Oñate

MOD.	COCINAS	ZONA	CONDUCCIONES Y GRIFOS / PIPES AND TAPS	PLANO	C-2368

ITEM	CODIGO	DENOMINACION	TEXTO	CGF9-120 I	CGF9-120 D	CGF9-121 I	CGF9-121 D				NOTAS
1	U025053000	TUBO PILOTO POST. COMPLETO	REAR PILOT PIPE COMPLETE	1	1	1	1				
2	U025059000	CON. QUEMADOR POSTER. COMP.	REAR BURNER UNIT COMP.	1	1	1	1				
3	U915014000	PORTATOBERAS HORNO	OVEN NOZZLE HOLDER	1	1	1	1				
	Q153002000	TORNILLO TAPON	CAP BOLT	1	1	1	1				
4	U022619000	POSICIONADOR PORTATOB. 4000	NOZZLE-HOLDER POSITION. 400	2	2	2	2				
5	_____	CONJUNTO PILOTO COMPLETO	COMPLETE PILOT UNIT	2	2	2	2				
S/Nº	X012126000	CUERPO SIN RAC. 901.210	BODY WITHOUT CONNEC. 901.21	2	2	2	2				
S/Nº	U442137000	INYECTOR Ø 0,4 GN	INJECTOR Ø 0.4 GN.	2	2	2	2				
S/Nº	U912107000	CABEZA PILOTO 1 LLAMA (G 700	PILOT HEAD 1 FLAME (G 700)	2	2	2	2				
S/Nº	U442130000	AMARRE TRASERO PI 978.009	REAR FASTEN. PI 978.009	2	2	2	2				
S/Nº	X012116000	TORNILLO AMA. 953.007	FAST. BOLT 953.007	2	2	2	2				
S/Nº	X012122000	REGULADOR AIRE 912.001	AIR CONTROL 912.001	2	2	2	2				
S/Nº	U442131000	AMARRE DELANTERO PI 978.021	FRONT FASTENING PI 978.021	2	2	2	2				
6	U222130000	TERMOPAR L=600	THERMOCOUPLE L=600	2	2	2	2				
S/Nº	U262130000	TERMOPAR L=1000	THERMOCOUPLE L=1000	1	1	1	1				
7	U025057000	TUBO PILOTO ANT. COMPLETO	FRONT PILOT PIPE COMPLETE	1	1	1	1				
8	U265033000	PORTATOBERAS Ø10	NOZZLE HOLDER Ø10	1	1	1	1				
	Q153002000	TORNILLO TAPON	CAP BOLT	1	1	1	1				
9	U025055000	CONDUC. QUEMADOR ANT. COMPL	FRONT BURNER PIPE COMPL.	1	1	1	1				
10	U215026000	DISTRIBUIDOR COMP. CGF9-120 I	COM. DISTRIBUTOR CGF9-120 I	1	_	_	_				
10	U215024000	DISTRIBUIDOR COMP. CGF9-120D	COM. DISTRIBUTOR CGF9-120 D	_	1	_	_				
10	U205029000	DISTRIBUIDOR COMP. CGF9-121I	COM. DISTRIBUTOR CGF9-121I	_	_	1	_				
10	U205031000	DISTRIBUIDOR COMP. CGF9-121D	COM. DISTRIBUTOR CGF9-121D	_	_	_	1				
	Q221342000	REMACHE EXAGONAL M5	HEXAGONAL RIVET M5		2	2	2				
	Q152004000	TORNILLO APLASTADO M5x13	FLAT HEAD SCREW M5X13		2	2	2				
11	U192104000	PILOTO COMPLETO	COMPLETE PILOT LIGHT		1	1	1				
S/Nº	U442137000	INYECTOR Ø 0,4 GN	INJECTOR Ø 0.4 GN.		1	1	1				
12	U615060000	TUBO PILOTO	PILOT PIPE		1	1	1				
	X205028000	BICONO Ø 6	BICONE Ø 6		1	1	1				
	U195009000	MANGUITO EMPALME	CONNECTION HOSE		1	1	1				
13	U205034000	TUBO VALVULA QUEMADOR	BURNER VALVE PIPE		1	1	1				

MOD.	COCINAS	ZONA	CONDUCCIONES Y GRIFOS / PIPES AND TAPS	PLANO	C-2368

ITEM	CODIGO	DENOMINACION	TEXTO	CGF9-120 I	CGF9-120 D	CGF9-121 I	CGF9-121 D				NOTAS
14	U915014000	PORTATOBERAS HORNO	OVEN NOZZLE HOLDER		1	1	1				
15	U942102000	GRIFO 18700 BY-PASS 1,20	TAP 18700 BY-PASS 1,20		1	1	1				
S/Nº	U912104000	BRIDA AMARRE GRIFO 1/2"	TAP FASTENING FLANGE 1/2"		1	1	1				
S/Nº	Q122032000	TORNILLO ALLEN M5x15	ALLEN BOLT M5x15		1	1	1				
16	U022117000	MANDO MONT COCINA GAS Ø8	GAS COOK. ASSEMBLY CTRL Ø8		3	3	3				
17	S113034000	PIEZOELECTRICO	PIEZOELECTRIC		1	1	1				
S/Nº	U333003000	CABLE MASA ENCENDEDOR	LIGHTER EARTH CABLE		1	1	1				
S/Nº	U323030000	CABLE BUJIA	SPARK PLUG CABLE		1	1	1				
S/Nº	X022131000	BUJIA	SPARK PLUG		1	1	1				
18	U912115000	GRIFO 18700 BY-PASS 0,75	TAP 18700 BY-PASS 0.75		1	1	1				
19	U912109000	GRIFO 18700 BY-PASS 1,15	TAP 18700 BY-PASS 1.15		1	1	1				
S/Nº	U912104000	BRIDA AMARRE GRIFO 1/2"	TAP FASTENING FLANGE 1/2"		2	2	2				
S/Nº	Q122032000	TORNILLO ALLEN M5x15	ALLEN BOLT M5x15		2	2	2				
20	U202103000	MANGUITO REDUCCION 1/2-3/8"	REDUCTION HOSE 1/2-3/8"	_	_	2	2				
	Q306058000	ARANDELA 25x17X2.5	WASHER 25x17X2.5	_	_	2	2				
21	S113034000	PIEZOELECTRICO	PIEZOELECTRIC	_	_	1	1				
S/Nº	U333003000	CABLE MASA ENCENDEDOR	LIGHTER EARTH CABLE	_	_	1	1				
S/Nº	U323030000	CABLE BUJIA	SPARK PLUG CABLE	_	_	1	1				
S/Nº	X022131000	BUJIA	SPARK PLUG	_	_	1	1				
22	U322118000	PILOTO COMPLETO 100.062	COMPLETE PILOT LIGHT 100,062	_	_	1	1				
S/Nº	U442137000	INYECTOR Ø 0,4 GN	INJECTOR Ø 0.4 GN.	_	_	1	1				
S/Nº	U562130000	TERMOPAR L=850	THERMOCOUPLE L=850	_	_	1	1				
	Q012031000	TORNILLO EXAGONAL M5x15 A304	HEXAGONAL BOLT M5x15 A304	_	_	2	2				
23	U134324000	VALVULA MINISIT 0710.654	VALVE MINISIT 0710.654	_	_	1	1				
S/Nº	Q307041000	JUNTA TORICA 25,4x20,2x2,6	O-RING 25.4x20.2x2.6	_	_	2	2				
S/Nº	U134317000	MANDO NEGRO MINI 916.124	BLACK CTRL. MINI 916.124	_	_	1	1				
S/Nº	U134318000	CUBIERTA MINISIT 903.052	COVER MINISIT 903.052	_	_	1	1				
S/Nº	Q031322000	TORNILLO ALOMADO M4x15	CURVED SCREW M4X15	_	_	8	8				
S/Nº	U264300000	RACOR 3/8 906,252	CONNECTION 3/8 906.252	_	_	2	2				
S/Nº	U134323000	RACORD BICONO 6 958.031	BICONE CONNECTION 6 958.031	_	_	1	1				

MOD.	COCINAS	ZONA	CONDUCCIONES Y GRIFOS / PIPES AND TAPS	PLANO	C-2368

ITEM	CODIGO	DENOMINACION	TEXTO	CGF9-120 I	CGF9-120 D	CGF9-121 I	CGF9-121 D				NOTAS
24	U025062000	TUBO PILOTO EUROSIT QUEM.	PILOT PIPE EUROSIT BURNER	_	_	1	1				
	U134323000	RACORD BICONO 6 958.031	BICONE CONNECTION 6 958.031	_	_	2	2				
25	U025061000	TUBO COMPLETO EUROSIT QUEMA	COMPLETE PIPE EUROSIT BURN	_	_	1	1				
26	U025050000	ENTRADA MINISIT COMPL CG900	INPUT MINISIT COMPL CG900	_	_	1	1				
	Q306062000	ARANDELA Ø13,9X10,33x1,5	WASHER Ø13.9X10.33x1.5	_	_	8	8				

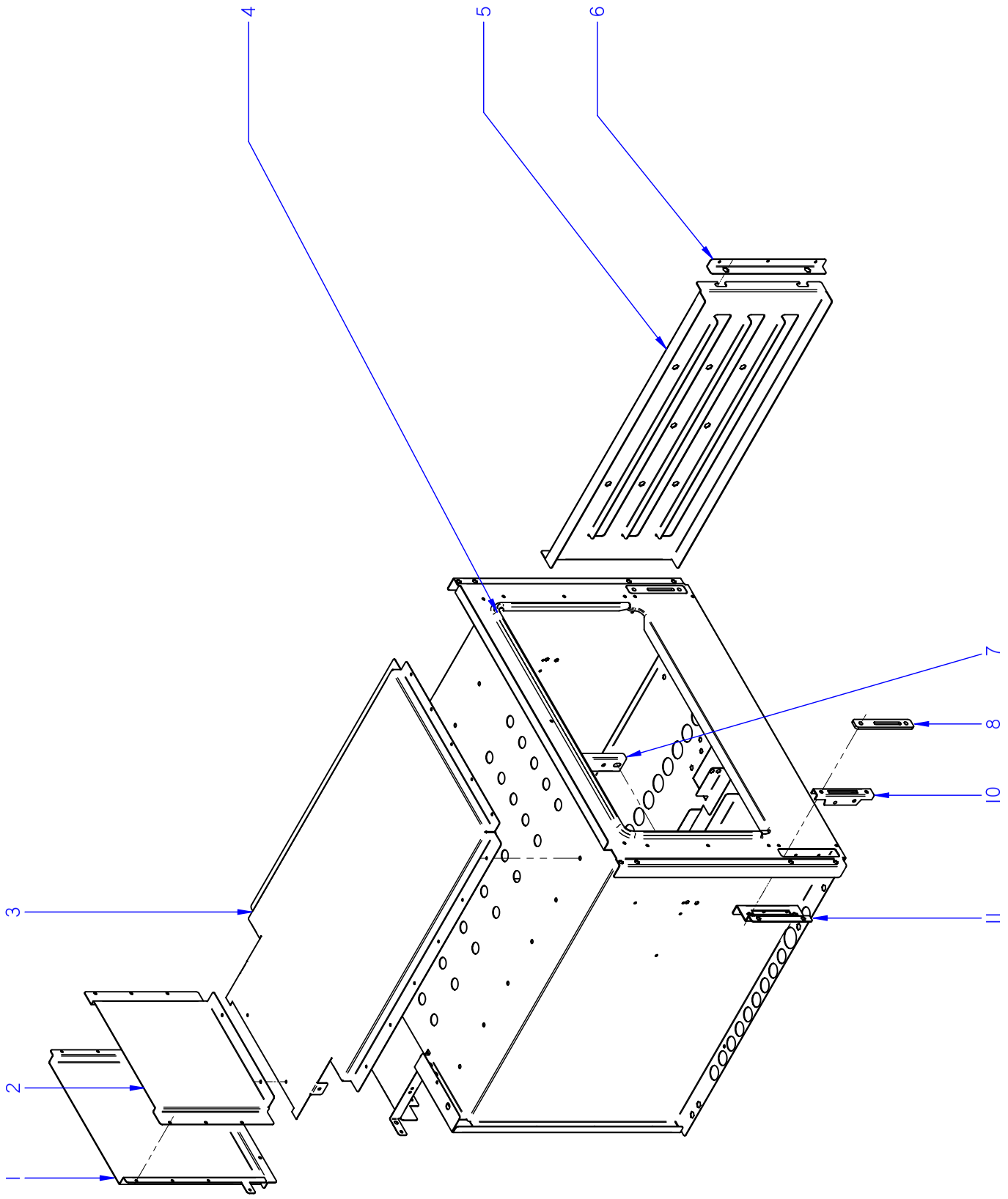

ITEM MARCADO EN COLOR = REPUESTO RECOMENDADO
COLOURED ITEM = RECOMMENDED SPARE PART

N plano	Firma	Fecha	Aparato	HORNO	Lamina	
C-2369		2009-06	COCINA CGF9-121		5	Fagor Industrial S.Coop. FAGOR Oñate

MOD.	COCINAS	ZONA	HORNO / OVEN	PLANO	C-2369

ITEM	CODIGO	DENOMINACION	TEXTO	CGF9-121							NOTAS
1	U025638000	POSTERIOR CHIMENEA G900	REAR FLUEPIPE G900	1							
	Q419005000	REMACHE 4x8 ALMG3 / ALUMINIO	RIVET 4X8 ALMG3 / ALUMINIUM	14							
2	U025637000	CHIMENEA ANTERIOR G900	FRONT FLUEPIPE G900	1							
3	U022615000	CAMARA DE HUMOS G900	SMOKE CHAMBER G900	1							
	Q419005000	REMACHE 4x8 ALMG3 / ALUMINIO	RIVET 4X8 ALMG3 / ALUMINIUM	19							
4	U025623000	JUNTA PUERTA HORNO INOX	OVEN DOOR SEAL INOX.	1							
5	U915607000	GUIA LATERAL HORNO G700	OVEN SIDE GUIDE G700	2							
	Q151336000	TORNILLO SOPORTE GUIAS	GUIDE SUPPORT BOLT	4							
	Q302022000	ARANDELA 16X6X1.2 A.304	WASHER 16X6X1.2 A.304	4							
	Q221321000	REMACHE ROSCAD.NUTSERT.M6	THREADED RIVET .NUTSERT.M6	4							
6	U915616000	SUPLEMENTO AMARRE GUIA LAT.	SIDE GUIDE FAST. SUPPL.	2							
	Q412000000	REMACHE TUBULAR 4x8	TUBULAR RIVET 4x8	6							
7	U055644000	FIJACION BULBO	FASTENING BULB	1							
	Q412000000	REMACHE TUBULAR 4x8	TUBULAR RIVET 4x8	2							
8	U915619000	EMBELLECED GUIA BISAGRA	HINGE GUIDE TRIM	2							
	Q152045000	TORNILLO AMARRE M6X25	FASTENING BOLT M6X25	4							
9	U010512000	GUIA DE BISAGRA	HINGE GUIDE	2							
10	U915604000	AMARRE GUIA BISAGRA HORNO	OVEN HINGE GUIDE FASTENING	2							
	Q221342000	REMACHE EXAGONAL M5	HEXAGONAL RIVET M5	2							
	Q412000000	REMACHE TUBULAR 4x8	TUBULAR RIVET 4x8	6							
	Q222042000	REMACHE EXAGONAL ROSCA M6	HEXAGONAL RIVET THREAD M6	4							

MOD.	COCINAS	ZONA	VARIOS / MISCELLANEOUS	PLANO	

ITEM	CODIGO	DENOMINACION	TEXTO	CGF9-120	CGF9-121						NOTAS
	U026508000	FOLLETO DE INSTRUCIONES CG	INSTRUCTION LEAFLET CG	1	1						