DESPIECE TECNICO / SPARE PARTS BOM

# Hornos eléctricos
# Fours électriques
# Electric ovens
# Elecktro heissluftdämpfer
# Forni elettrici
# Fornos eletricos

## Modelos / Models:

**AE-102 W**
**APE-102 W**

***Febrero 2014 February***
***Revisado Julio 2015 July revised***

FAGOR

FAGOR INDUSTRIAL

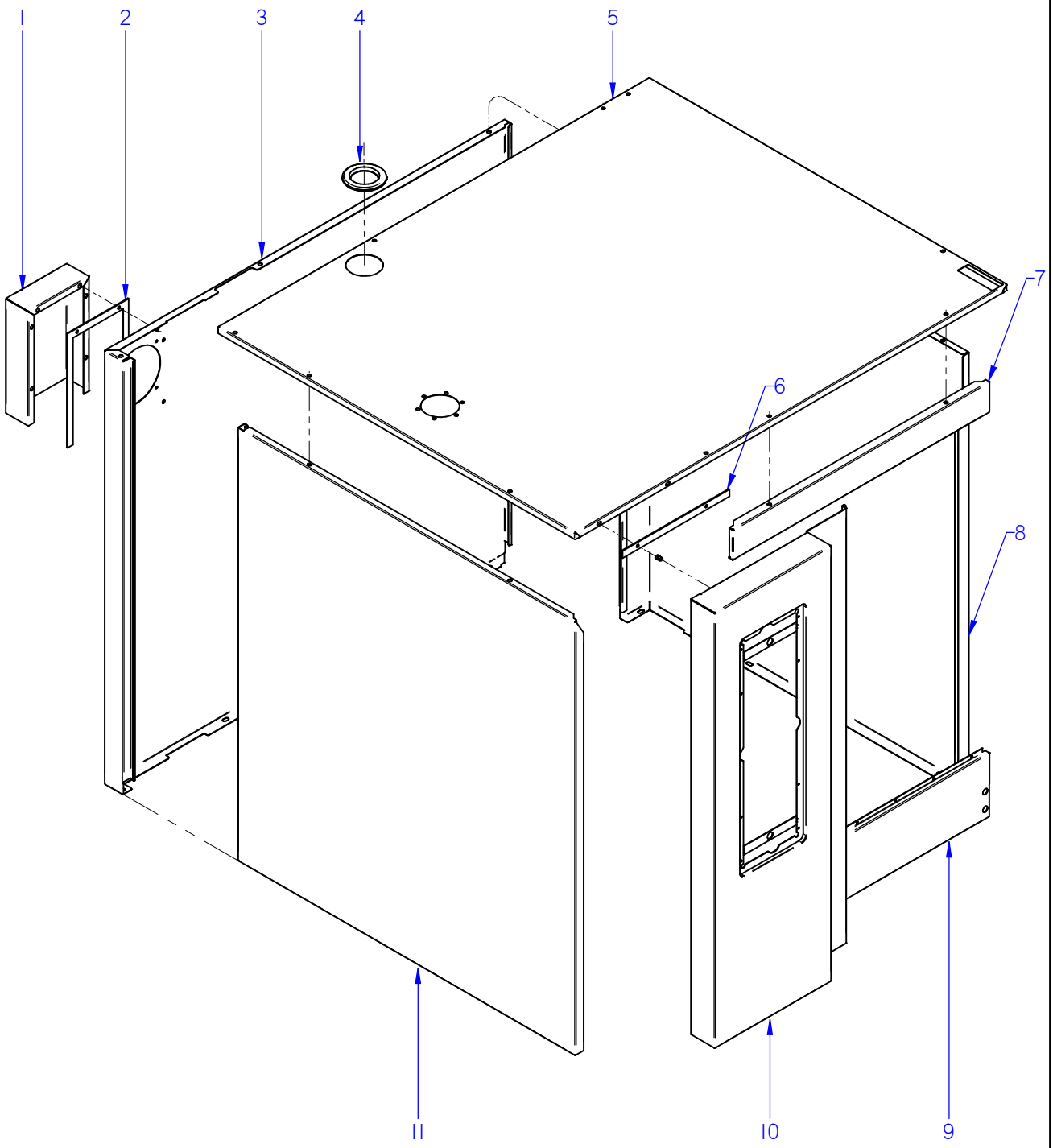


ITEM MARCADO EN COLOR = REPUESTO RECOMENDADO
COLOURED ITEM = RECOMMENDED SPARE PART

| Nº plano / N º plane | Firma | Fecha / Date | Denominación / Denomination: MUEBLE / UNIT | Lamina / Sheet | |
|---|---|---|---|---|---|
| C-3203 | | 2014-02 | HORNO AE-102 W / APE-102 W | 1 | Fagor Industrial S.Coop. FAGOR Oñate |

| MOD. | HORNOS / OVEN | ZONA / ZONE | MUEBLE / UNIT | PLANO DIAGRAM | C-3203 |
|---|---|---|---|---|---|

| ITEM | CODIGO REFERENCE | DENOMINACION | DENOMINATION | AE-102 W | APE-102 W | | | | | | | ELIMINADO ELIMINATED | INTRODUCID. INTRODUCED | NOTAS |
|---|---|---|---|---|---|---|---|---|---|---|---|---|---|---|
| 1 | 12022537 | CHAPA SEPARACION IPX5 | SEPARATION PLATE IPX5 | 1 | 1 | | | | | | | | | |
| | 12010163 | REMACHE EXAGONAL M.5 | HEXAGONAL RIVET M.5 | 11 | 11 | | | | | | | | | |
| 2 | 12024082 | JUNTA IPX5 | SEAL IPX5 | 1 | 1 | | | | | | | | | |
| | 12009944 | ARANDELA A5 | FLAT WASHER A.5 | 6 | 6 | | | | | | | | | |
| | 12009890 | ARANDELA ABANICO A5 A.304 | FAN SHAPED WASHER A.5 | 6 | 6 | | | | | | | | | |
| | 12010267 | ARANDELA 16X6X1.2 A.304 | FLAT WASHER 16X6X1.2 A.304 | 7 | 7 | | | | | | | | | |
| | 12009882 | ARANDELA ABANICO A6 A.304 | FAN SHAPED WASHER A.6 | 7 | 7 | | | | | | | | | |
| | 12010249 | TORNILLO EXAGONAL M4X10 | HEXAGONAL BOLT M4X10 | 7 | 7 | | | | | | | | | |
| | 12010186 | TORNILLO EXAGONAL M6X15 A304 | HEXAGONAL SCREW M6X15 | 6 | 6 | | | | | | | | | |
| 3 | 12041375 | PANEL POSTER EXTER 102 ADV | REAR EXTERIOR PANEL102 ADV | 1 | 1 | | | | | | | | | |
| 4 | 12024231 | PASAMUROS CHIMENEA 10100336 | FEED THROUGH FLUE PIPE 1010 | 1 | 1 | | | | | | | | | |
| | 12010242 | TORNIL. APLASTADO M5X13 A 304 | FLAT SCREW M.5x13 | 7 | 7 | | | | | | | | | |
| 5 | 12044337 | PANEL SUPERIOR SOLD. AE 102 | TOP PANEL AE 102 SOLDIER | 1 | 1 | | | | | | | | | |
| 6 | 12039370 | JUNTA PORTAMANDOS X02 | CONTROL PANEL SEAL X02 | 1 | 1 | | | | | | | | | |
| 7 | 12041372 | PANEL FRONTAL SUPER.102 ADV | UPPER FRONT PANEL ADV 102 | 1 | 1 | | | | | | | | | |
| 8 | 12041374 | PANEL DERECHO 102 ADV | RIGHT PANEL 102 ADV | 1 | 1 | | | | | | | | | |
| 9 | 12041373 | PANEL FRONTAL INFER. 102 ADV | LOWER FRONT PANEL ADV 102 | 1 | 1 | | | | | | | | | |
| 10 | 12041356 | PORTAMANDOS 102 APE | CONTROL PANEL 102 APE | 1 | 1 | | | | | | | | | |
| 11 | 12041602 | PANEL EXTER. IZDO. 102 ADV | REAR LEFT PANEL 102 ADV | 1 | 1 | | | | | | | | | |
| | 12010163 | REMACHE EXAGONAL M.5 | HEXAGONAL RIVET M.5 | 2 | 2 | | | | | | | | | |
| | 12010267 | ARANDELA 16X6X1.2 A.304 | FLAT WASHER 16X6X1.2 A.304 | 2 | 2 | | | | | | | | | |
| | 12009882 | ARANDELA ABANICO A6 A.304 | FAN SHAPED WASHER A.6 | 2 | 2 | | | | | | | | | |
| | 12010186 | TORNILLO EXAGONAL M6X15 A304 | HEXAGONAL SCREW M6X15 | 2 | 2 | | | | | | | | | |
| | 12010242 | TORNIL. APLASTADO M5X13 A 304 | FLAT SCREW M.5x13 | 2 | 2 | | | | | | | | | |
| | | | | | | | | | | | | | | |
| | | | | | | | | | | | | | | |
| | | | | | | | | | | | | | | |
| | | | | | | | | | | | | | | |
| | | | | | | | | | | | | | | |
| | | | | | | | | | | | | | | |
| | | | | | | | | | | | | | | |

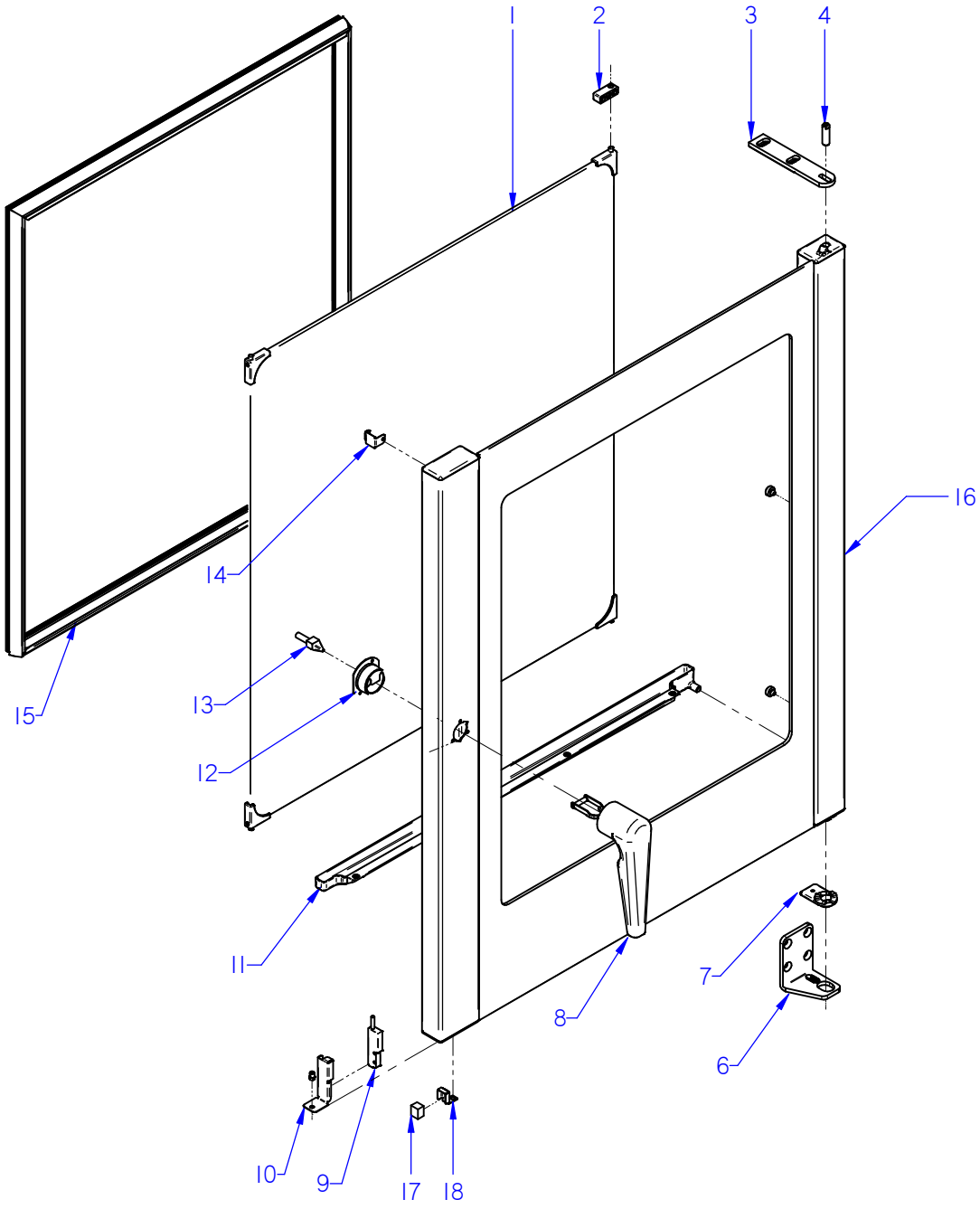


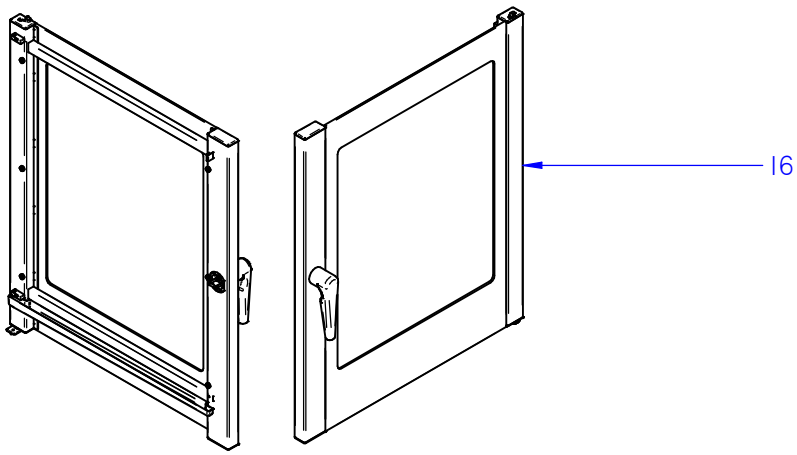


ITEM MARCADO EN COLOR = REPUESTO RECOMENDADO
COLOURED ITEM = RECOMMENDED SPARE PART

| Nº plano / N º plane | Firma / Signature | Fecha / Date | Denominación / Denomination: PUERTA / DOOR | Lamina / Sheet | |
|---|---|---|---|---|---|
| C-3204 | Iban R. | 03-2015 | HORNO AE-102 W / APE-102 W | 2 | Fagor Industrial S.Coop. FAGOR Oñate |

| MOD. | HORNOS / OVEN | ZONA / ZONE | PUERTA / DOOR | PLANO DIAGRAM | C-3204 |
|---|---|---|---|---|---|

| ITEM | CODIGO REFERENCE | DENOMINACION | DENOMINATION | AE-102 W | APE-102 W | | | | | | | ELIMINADO ELIMINATED | INTRODUCID. INTRODUCED | NOTAS |
|---|---|---|---|---|---|---|---|---|---|---|---|---|---|---|
| **1** | **12046043** | **KIT CRISTAL INTER. 102** | **102 INNER GLASS KIT** | **1** | **1** | | | | | | | | | |
| 2 | 12039508 | BISAGRA CRISTAL INTERIOR | INNER GLASS HINGE | 2 | 2 | | | | | | | | | |
| | 12010209 | TORNILLO AVELLANADO M5X15 | COUNTERSUNK SCREW M.5x15 | 2 | 2 | | | | | | | | | |
| 3 | 12039312 | BISAGRA SUPERIOR | UPPER HINGE | 1 | 1 | | | | | | | | | |
| | 12009882 | ARANDELA ABANICO A6 A.304 | FAN SHAPED WASHER A.6 | 3 | 3 | | | | | | | | | |
| | 12010106 | TORNILLO ALLEN INOX. M6X35MM | ALLEN BOLT STAINLE.M6X35MM | 3 | 3 | | | | | | | | | |
| 4 | 12023636 | EJE SUPERIOR | UPPER SHAFT | 1 | 1 | | | | | | | | | |
| | 12023631 | ARANDELA AMARRE | DOOR ANCHORING WASHER | 1 | 1 | | | | | | | | | |
| | 12023716 | RESORTE 06329 | SPRING 06329 | 1 | 1 | | | | | | | | | |
| | 12009882 | ARANDELA ABANICO A6 A.304 | FAN SHAPED WASHER A.6 | 1 | 1 | | | | | | | | | |
| | 12010186 | TORNILLO EXAGONAL M6X15 A304 | HEXAGONAL SCREW M6X15 | 1 | 1 | | | | | | | | | |
| 6 | 12043391 | BISAGRA INFERIOR ADVANCE | BOTTOM HINGE ADVANCE | 1 | 1 | | | | | | | | | |
| 7 | 12047967 | BASE BISAGRA INFERIOR 6 DIEN | LOWER HINGE BASE | 1 | 1 | | | | | | | | | |
| | 12009890 | ARANDELA ABANICO A5 A.304 | FAN SHAPED WASHER A.5 | 1 | 1 | | | | | | | | | |
| | 12009944 | ARANDELA A5 | FLAT WASHER A.5 | 1 | 1 | | | | | | | | | |
| | 12010238 | TORNILLO EXAGONAL M5x10 | HEXAGONAL BOLT M5x10 | 1 | 1 | | | | | | | | | |
| | 12010199 | TORNILLO AVELLANADO M6x16 | COUNTERSUNK SCREW M6x16 | 4 | 4 | | | | | | | | | |
| 8 | 12047580 | REP. MANILLA 1/1 ADVANCE | HANDLE 1/1 ADVANCE | 1 | 1 | | | | | | | | | |
| | 12010262 | TORNILLO AVELLANADO M4X15 | COUNTERSUNK SCREW M.4x15 | 3 | 3 | | | | | | | | | |
| 9 | 12024560 | INTERRUPTOR MAGNETICO AC | MAGNETIC SWITCH AC | 1 | 1 | | | | | | | | | |
| 10 | 12022166 | SOPORTE MICRO PUERTA | DOOR MICRO SWITCH | 1 | 1 | | | | | | | | | |
| | 12010242 | TORNIL. APLASTADO M5X13 A 304 | FLAT SCREW M.5x13 | 1 | 1 | | | | | | | | | |
| 11 | 12039451 | RECOGEAGUAS PUERTA 2/1 | DOOR SPRING WATER COLLECT | 1 | 1 | | | | | | | | | |
| | 12009944 | ARANDELA A5 | FLAT WASHER A.5 | 3 | 3 | | | | | | | | | |
| | 12009890 | ARANDELA ABANICO A5 A.304 | FAN SHAPED WASHER A.5 | 3 | 3 | | | | | | | | | |
| | 12010242 | TORNIL. APLASTADO M5X13 A 304 | FLAT SCREW M.5x13 | 3 | 3 | | | | | | | | | |
| 12 | 12091814 | EMBELLECEDOR PUERTA ADV-UL | DOOR TRIM ADV-UL | 1 | 1 | | | | | | | | | |
| | 12010262 | TORNILLO AVELLANADO M4X15 | COUNTERSUNK SCREW M.4x15 | 2 | 2 | | | | | | | | | |
| 13 | 12023849 | ANCLAJE PUERTA | DOOR ANCHORING | 1 | 1 | | | | | | | | | |
| | 12009970 | REMACHE EXAGONAL M.5 INOX | HEXAGONAL RIVET M.5 INOX | 2 | 2 | | | | | | | | | |
| 14 | 12041725 | MUELLE CIERRE CRISTAL INTERIO | INNER GLASS SPRING LOCK | 1 | 1 | | | | | | | | | |

| MOD. | HORNOS / OVEN | ZONA / ZONE | PUERTA / DOOR | PLANO DIAGRAM | C-3204 |
|---|---|---|---|---|---|

| ITEM | CODIGO REFERENCE | DENOMINACION | DENOMINATION | AE-102 W | APE-102 W | | | | | | | ELIMINADO ELIMINATED | INTRODUCID. INTRODUCED | NOTAS |
|---|---|---|---|---|---|---|---|---|---|---|---|---|---|---|
| 15 | 12041578 | JUNTA PUERTA COMPL.102 ADV | DOOR JOINT 102 ADV | 1 | 1 | | | | | | | | | |
| **16** | **12046020** | **KIT PUERTA 102** | **DOOR 102 KIT** | **1** | **1** | | | | | | | | | |
| 17 | 12024303 | IMAN | MAGNET | 1 | 1 | | | | | | | | | |
| 18 | 12049358 | SOPORTE IMAN | MAGNET SUPPORT | 1 | 1 | | | | | | | | | |

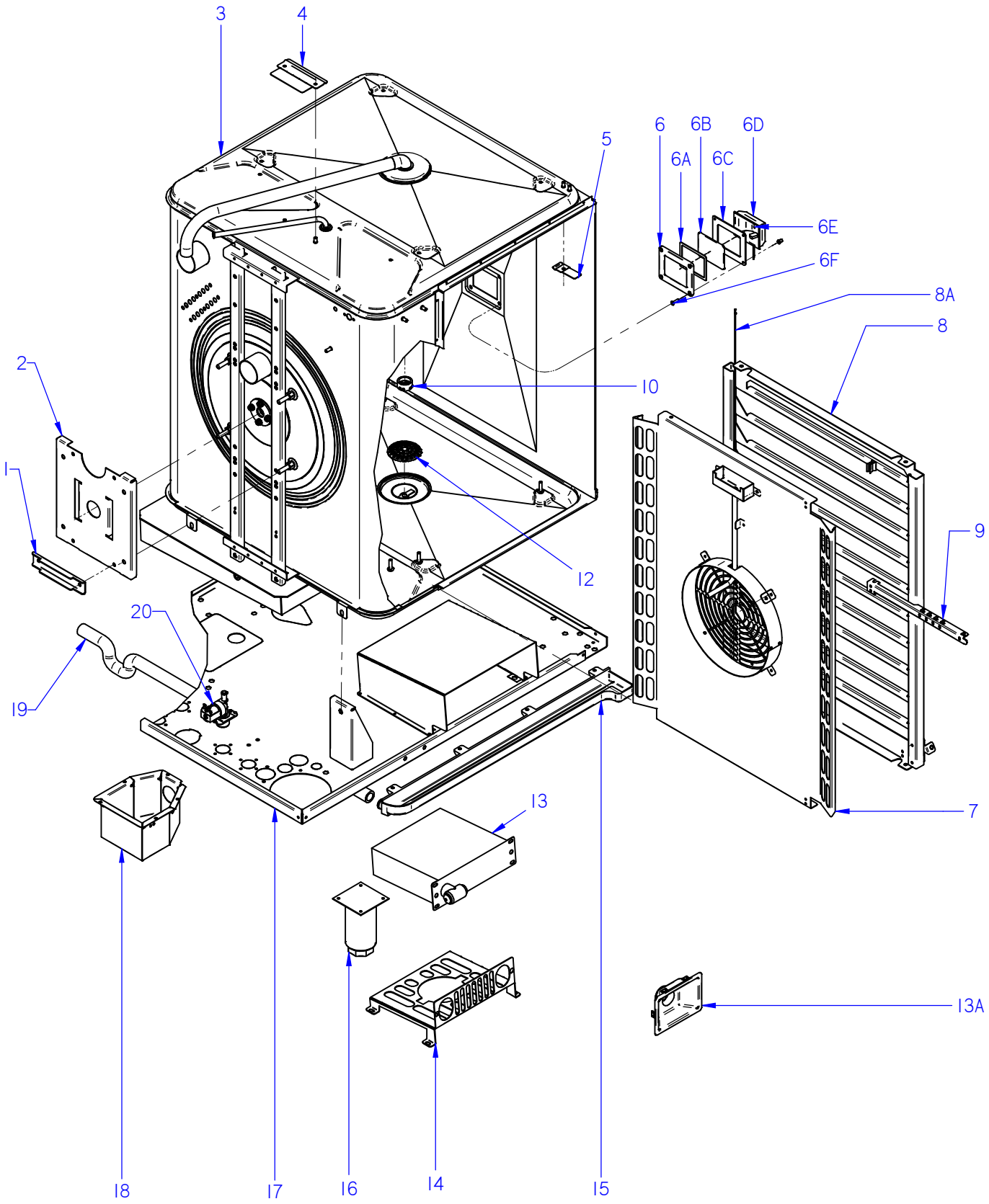


ITEM MARCADO EN COLOR = REPUESTO RECOMENDADO
COLOURED ITEM = RECOMMENDED SPARE PART

| Nº plano / N º plane | Firma | Fecha / Date | Denominación / Denomination: MUEBLE INTERIOR / INTERIOR OVEN | Lamina / Sheet | |
|---|---|---|---|---|---|
| C-3205 | Iban R. | 03-2015 | HORNO AE-102 W / APE-102 W | 3 | Fagor Industrial S.Coop. FAGOR Oñate |

| MOD. | HORNOS / OVEN | ZONA / ZONE | MUEBLE INTERIOR / INTERIOR OVEN | PLANO DIAGRAM | C-3205 |
|---|---|---|---|---|---|

| ITEM | CODIGO REFERENCE | DENOMINACION | DENOMINATION | AE-102 W | APE-102 W | | | | | | | ELIMINADO ELIMINATED | INTRODUCID. INTRODUCED | NOTAS |
|---|---|---|---|---|---|---|---|---|---|---|---|---|---|---|
| 1 | 12022413 | REFUERZO MOTOR 10/21 | MOTOR REINFORCEMENT 10/21 | 1 | 1 | | | | | | | | | |
| | 12009944 | ARANDELA A5 | FLAT WASHER A.5 | 4 | 4 | | | | | | | | | |
| | 12009890 | ARANDELA ABANICO A5 A.304 | FAN SHAPED WASHER A.5 | 4 | 4 | | | | | | | | | |
| | 12010221 | TORNILLO EXAGONAL M5X15 | HEXAGONAL BOLT M5X15 | 4 | 4 | | | | | | | | | |
| 2 | 12022599 | SOPORTE MOTOR | SOPORTE MOTOR | 1 | 1 | | | | | | | | | |
| 3 | 12043864 | CUERPO INT. COMPL. AE 102 | INTERIOR FULL BODY AE 102 | 1 | _ | | | | | | | | | |
| 3 | 12041312 | CUERPO INT. COMPL. 102 APE | INTERIOR FULL BODY 102 APE | _ | 1 | | | | | | | | | |
| 4 | 12039529 | SOPORTE LIMITADOR CAMARA | LIMITER BRACKET CAMERA | 1 | 1 | | | | | | | | | |
| | 12009868 | ARANDELA PLANA INOX 6MM | WASHER FLAT 6 MM INOX. | 2 | 2 | | | | | | | | | |
| | 12009882 | ARANDELA ABANICO A6 A.304 | FAN SHAPED WASHER A.6 | 2 | 2 | | | | | | | | | |
| | 12010255 | TORNILLO EXAGONAL M6 INOX. | HEXAGONAL SCREW M6 INOX. | 2 | 2 | | | | | | | | | |
| 5 | 12041767 | SOPORTE SONDA PINCHO CAMARA | CAMERA PROBE SUPP. PINCHO | 2 | 2 | | | | | | | 14,02,13 | | |
| | 12009944 | ARANDELA A5 | FLAT WASHER A.5 | 4 | 4 | | | | | | | | | |
| | 12009890 | ARANDELA ABANICO A5 A.304 | FAN SHAPED WASHER A.5 | 4 | 4 | | | | | | | | | |
| | 12010284 | TORNILLO EXAGONAL M5 INOX. | HEXAGONAL SCREW M5 INOX. | 4 | 4 | | | | | | | | | |
| | 12010090 | REMACHE AVINOX Ø4X7,5MM | AVINOX RIVET Ø4X7,5MM | 2 | 2 | | | | | | | | | |
| 6 | 12024464 | MARCO LAMPARA | LAMP ANCHORING PLATEN | 1 | 1 | | | | | | | | | |
| 6A | 12023532 | JUNTA INTERIOR LAMPARA | LAMP INNER JOINT | 1 | 1 | | | | | | | | | |
| 6B | 12023668 | CRISTAL LAMPARA | LAMP GLASS | 1 | 1 | | | | | | | | | |
| 6C | 12023578 | JUNTA EXTERIOR LAMPARA | LAMP OUTER JOINT | 1 | 1 | | | | | | | | | |
| 6D | 12024545 | PORTALAMPARAS | LAMP HOLDER | 1 | 1 | | | | | | | | | |
| 6E | 12025123 | LAMPARA 10W-12V | LIGHT 10W 12V | 1 | 1 | | | | | | | | | |
| 6F | 12010262 | TORNILLO M4X15MM DIN965 | M4X15MM DIN965 SCREW | 4 | 4 | | | | | | | | | |
| **7** | **12126834** | **CUBREVENTILADOR AE-102** | **FAN COVER AE-102** | **1** | **1** | | | | | | | | | |
| | | | | | | | | | | | | | | |
| | | | | | | | | | | | | | | |
| | | | | | | | | | | | | | | |
| | | | | | | | | | | | | | | |
| | | | | | | | | | | | | | | |
| | | | | | | | | | | | | | | |
| | | | | | | | | | | | | | | |

| MOD. | HORNOS / OVEN | ZONA / ZONE | MUEBLE INTERIOR / INTERIOR OVEN | PLANO DIAGRAM | C-3205 |
|---|---|---|---|---|---|

| ITEM | CODIGO REFERENCE | DENOMINACION | DENOMINATION | AE-102 W | APE-102 W | | | | | | | ELIMINADO ELIMINATED | INTRODUCID. INTRODUCED | NOTAS |
|---|---|---|---|---|---|---|---|---|---|---|---|---|---|---|
| **8** | **12126820** | **KIT PORTABANDEJAS DCHA. 102** | **RIGHT HOLDER TRAYS ADV 102** | **1** | **1** | | | | | | | | | |
| **8** | **12126821** | **KIT PORTABANDEJAS IZDA 102** | **LEFT HOLDER TRAYS ADV 102** | **1** | **1** | | | | | | | | | |
| 8A | 12039490 | TOPE BANDEJAS 101-102 | TRAY TOP101-102 | 2 | 2 | | | | | | | | | |
| **9** | **12126827** | **SOPORTE CORE HOLDER** | **CORE HOLDER SUPPORT** | **1** | **1** | | | | | | | | | |
| 10 | 12023935 | PUNTA DIFUSORA LAVADO | WASHING DISPENSER POINT | _ | 1 | | | | | | | | | |
| 12 | 12095042 | FILTRO DESAGÜE Ø53 | DRAINAGE FILTER Ø53 | 1 | 1 | | | | | | | | | |
| 13 | 12040977 | DUCHA | SHOWER | 1 | 1 | | | | | | | | | |
| 13A | 12041736 | EMBELLECEDOR DUCHA ADV. | SHOWER TRIM ADVANCE | 1 | 1 | | | | | | | | | |
| 14 | 12039620 | CHAPA AMARRE DUCHA | TIE PLATE SHOWER | 1 | 1 | | | | | | | | | |
| | 12009868 | ARANDELA PLANA INOX 6MM | WASHER FLAT 6 MM INOX. | 2 | 2 | | | | | | | | | |
| | 12009882 | ARANDELA ABANICO A6 A.304 | FAN SHAPED WASHER A.6 | 2 | 2 | | | | | | | | | |
| | 12010180 | TORNILLO EXAGONAL M6X20 INOX. | HEXAGONAL SCREW M6X20 INOX. | 2 | 2 | | | | | | | | | |
| 15 | 12039437 | RECOGEAGUAS HORNO 102 | SPRING WATER COLLE. 102 | 1 | 1 | | | | | | | | | |
| | 12010267 | ARANDELA 16X6X1.2 A.304 | FLAT WASHER 16X6X1.2 A.304 | 6 | 6 | | | | | | | | | |
| | 12009882 | ARANDELA ABANICO A6 A.304 | FAN SHAPED WASHER A.6 | 6 | 6 | | | | | | | | | |
| | 12010186 | TORNILLO EXAGONAL M6X16 INOX. | HEXAGONAL SCREW M6X16 INOX. | 6 | 6 | | | | | | | | | |
| 16 | 12009104 | PATA REGULABLE | REGULABLE LEG | 4 | 4 | | | | | | | | | |
| | 12009868 | ARANDELA PLANA INOX 6MM | WASHER FLAT 6 MM INOX. | 16 | 16 | | | | | | | | | |
| | 12009882 | ARANDELA ABANICO A6 A.304 | FAN SHAPED WASHER A.6 | 16 | 16 | | | | | | | | | |
| | 12010180 | TORNILLO EXAGONAL M6X20 INOX. | HEXAGONAL SCREW M6X20 INOX. | 16 | 16 | | | | | | | | | |
| 17 | 12041286 | BASE EXTERIOR 102 ADV | EXTERI. BASE 102 ADV | 1 | 1 | | | | | | | | | |
| | 12010126 | REMACHE EXAGONAL M.6 | HEXAGONAL RIVET M.6 | 35 | 35 | | | | | | | | | |
| 18 | 12043836 | CAJA IPX5 APE ADVANCE | IPX5 APE ADVANCE COVER | _ | 1 | | | | | | | | | |
| 19 | 12039498 | TUBO RECOGEAGUAS 101 | COLLECT WATER PIPE 101 | 1 | 1 | | | | | | | | | |
| | 12009628 | ABRAZADERA ELAST. 26.7-28.1 | SPRING CLAMP 26.7-28.1 | 2 | 2 | | | | | | | | | |
| | | | | | | | | | | | | | | |
| | | | | | | | | | | | | | | |
| | | | | | | | | | | | | | | |
| | | | | | | | | | | | | | | |
| | | | | | | | | | | | | | | |
| | | | | | | | | | | | | | | |

| MOD. | HORNOS / OVEN | ZONA / ZONE | MUEBLE INTERIOR / INTERIOR OVEN | PLANO DIAGRAM | C-3205 |
|---|---|---|---|---|---|

| ITEM | CODIGO REFERENCE | DENOMINACION | DENOMINATION | AE-102 W | APE-102 W | | | | | | | ELIMINADO ELIMINATED | INTRODUCID. INTRODUCED | NOTAS |
|---|---|---|---|---|---|---|---|---|---|---|---|---|---|---|
| 20 | 12025161 | ELECTROVALV. 230VAC 50/60Hz 1V | SOLENOID VALVE 230VAC 1 V | 1 | 1 | | | | | | | | | |

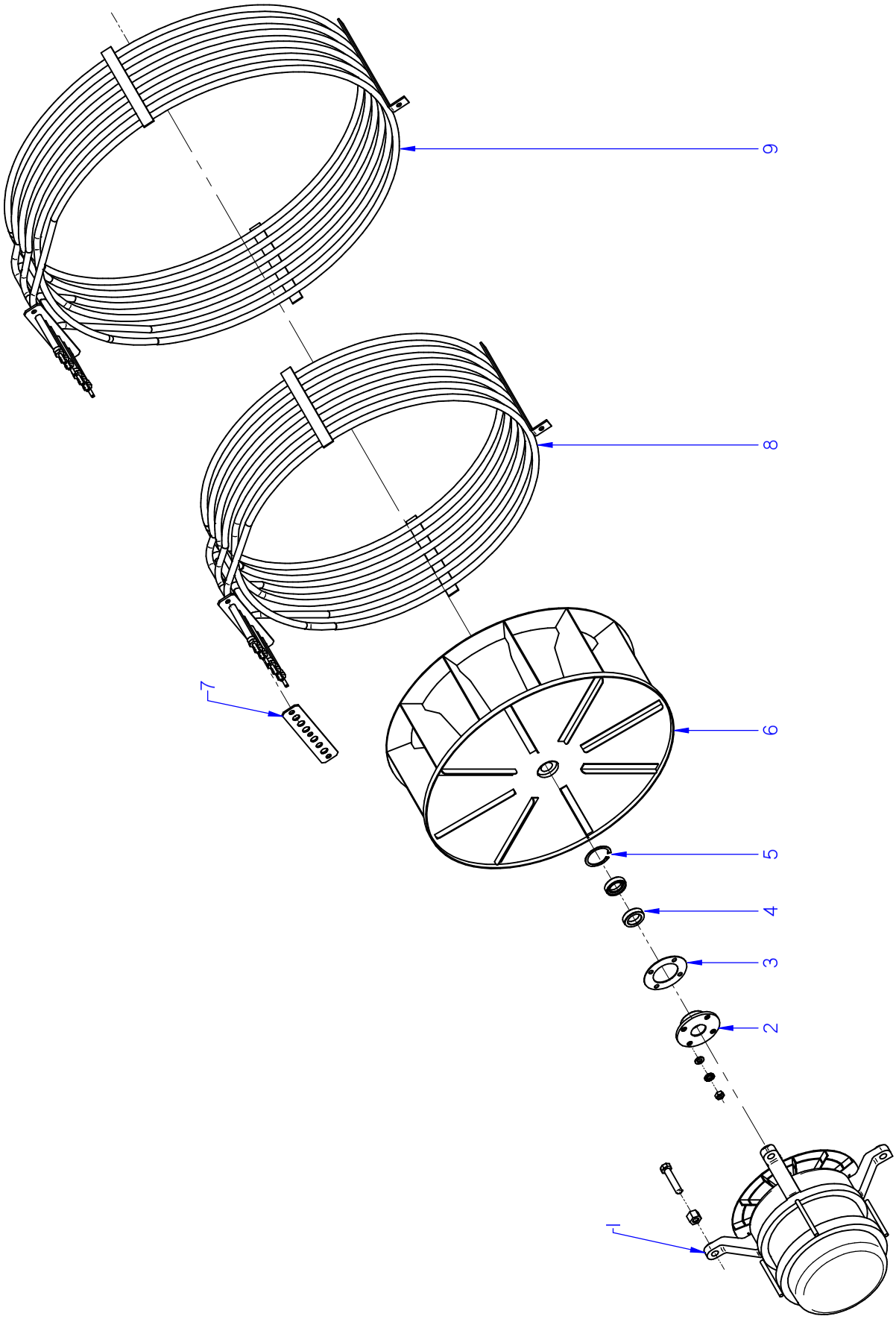


ITEM MARCADO EN COLOR = REPUESTO RECOMENDADO
COLOURED ITEM = RECOMMENDED SPARE PART

| Nº plano / N º plane | Firma | Fecha / Date | Denominación / Denomination: TURBINA / TURBINE | Lamina / Sheet | |
|---|---|---|---|---|---|
| C-3206 | | 2014-02 | HORNO AE-102 W / APE-102 W | 4 | Fagor Industrial S.Coop. FAGOR Oñate |

| MOD. | HORNOS / OVEN | ZONA / ZONE | TURBINA / TURBINE | PLANO DIAGRAM | C-3206 |
|---|---|---|---|---|---|

| ITEM | CODIGO REFERENCE | DENOMINACION | DENOMINATION | AE-102 W | APE-102 W | | | | | | | ELIMINADO ELIMINATED | INTRODUCID. INTRODUCED | NOTAS |
|---|---|---|---|---|---|---|---|---|---|---|---|---|---|---|
| 1 | 12024325 | MOTOR 230V AC 3N650KW 1450RP | MOTOR 230V AC 3N650KW 1450 | 1 | 1 | | | | | | | | | |
| S/Nº | 12023560 | DISTANCIADOR MOTOR 10/21 | SPACER MOTOR 10/21 | 4 | 4 | | | | | | | | | |
| | 12010110 | ARANDELA PLANA Fe Zn 8,40MM | WASHER FLAT Fe Zn 8,40MM | 4 | 4 | | | | | | | | | |
| | 12009840 | ARANDELA ABANICO INOX 8MM | FAN SHAPED WASHER NOX 8MM | 4 | 4 | | | | | | | | | |
| | 12010210 | TORNILLO EXAGONAL INOX 8MM | HEXAGONAL SCREW INOX 8MM | 4 | 4 | | | | | | | | | |
| 2 | 12024742 | CASQUILLO RETEN 10/21 | SEAL BUSHING 10/21 | 1 | 1 | | | | | | | | | |
| 3 | 12024221 | JUNTA CASQUILLO RETEN | SEAL BUSHING GASKET | 1 | 1 | | | | | | | | | |
| | 12009868 | ARANDELA PLANA INOX 6MM | WASHER FLAT 6 MM INOX. | 4 | 4 | | | | | | | | | |
| | 12009882 | ARANDELA ABANICO A6 A.304 | FAN SHAPED WASHER A.6 | 4 | 4 | | | | | | | | | |
| | 12010255 | TORNILLO EXAGONAL M6 INOX. | HEXAGONAL SCREW M6 INOX. | 4 | 4 | | | | | | | | | |
| | 12010056 | TORNILLO EXAGONAL M8X40 INOX | HEXAGONAL SCREW M8X40 INO | 4 | 4 | | | | | | | | | |
| 4 | 12024510 | RETEN 17X28X7V | RETAINER 28x17x7 | 2 | 2 | | | | | | | | | |
| 5 | 12010122 | ANILLO DE SEGURIDAD Ø 28X1.2 | SAFETY RING 28x1,2 | 1 | 1 | | | | | | | | | |
| 6 | 12024306 | TURBINA RECTA Ø350X127 HANN. | TURBINE RECTA Ø350X127 HAN | 1 | 1 | | | | | | | | | |
| | 12024190 | ARANDELA SEGURIDAD HANNING | HANNING SAFETY WASHER | 1 | 1 | | | | | | | | | |
| | 12010030 | TORNILLO EXAGONAL M10X20 | HEXAGONAL SCREW M10X20 | 1 | 1 | | | | | | | | | |
| 7 | 12023679 | JUNTA RESISTENCIA | RESISTANCE SEAL | 2 | 2 | | | | | | | | | |
| 8 | 12024349 | RESISTENCIA INTERIOR 3 X 5KW | INSIDE RESISTANCE 3 X 5KW | 1 | 1 | | | | | | | | | |
| 9 | 12024359 | RESISTENCIA EXTERIOR 3 X 5KW | EXTERNAL RESISTANCE 3 X 5KW | 1 | 1 | | | | | | | | | |
| | 12010016 | TORNIL. EXAGONAL M6X15 LATON | BRASS HEXAGO. SCREW M6x15 | 3 | 3 | | | | | | | | | |
| | 12009868 | ARANDELA PLANA INOX 6MM | WASHER FLAT 6 MM INOX. | 3 | 3 | | | | | | | | | |
| | 12009872 | ARANDELA GROWER INOX 6MM | WASHER GROWER INOX 6MM | 3 | 3 | | | | | | | | | |
| | 12010255 | TORNILLO EXAGONAL M6 INOX. | HEXAGONAL SCREW M6 INOX. | 1 | 1 | | | | | | | | | |
| | 12010232 | ARANDELA LATON M-4 | BRASS WASHER M-4 | 3 | 3 | | | | | | | | | |
| | 12010244 | TUERCA EXAGONAL M4 LATON | BRASS HEXAGONAL NUT M4 | 3 | 3 | | | | | | | | | |
| | | | | | | | | | | | | | | |
| | | | | | | | | | | | | | | |
| | | | | | | | | | | | | | | |
| | | | | | | | | | | | | | | |
| | | | | | | | | | | | | | | |
| | | | | | | | | | | | | | | |

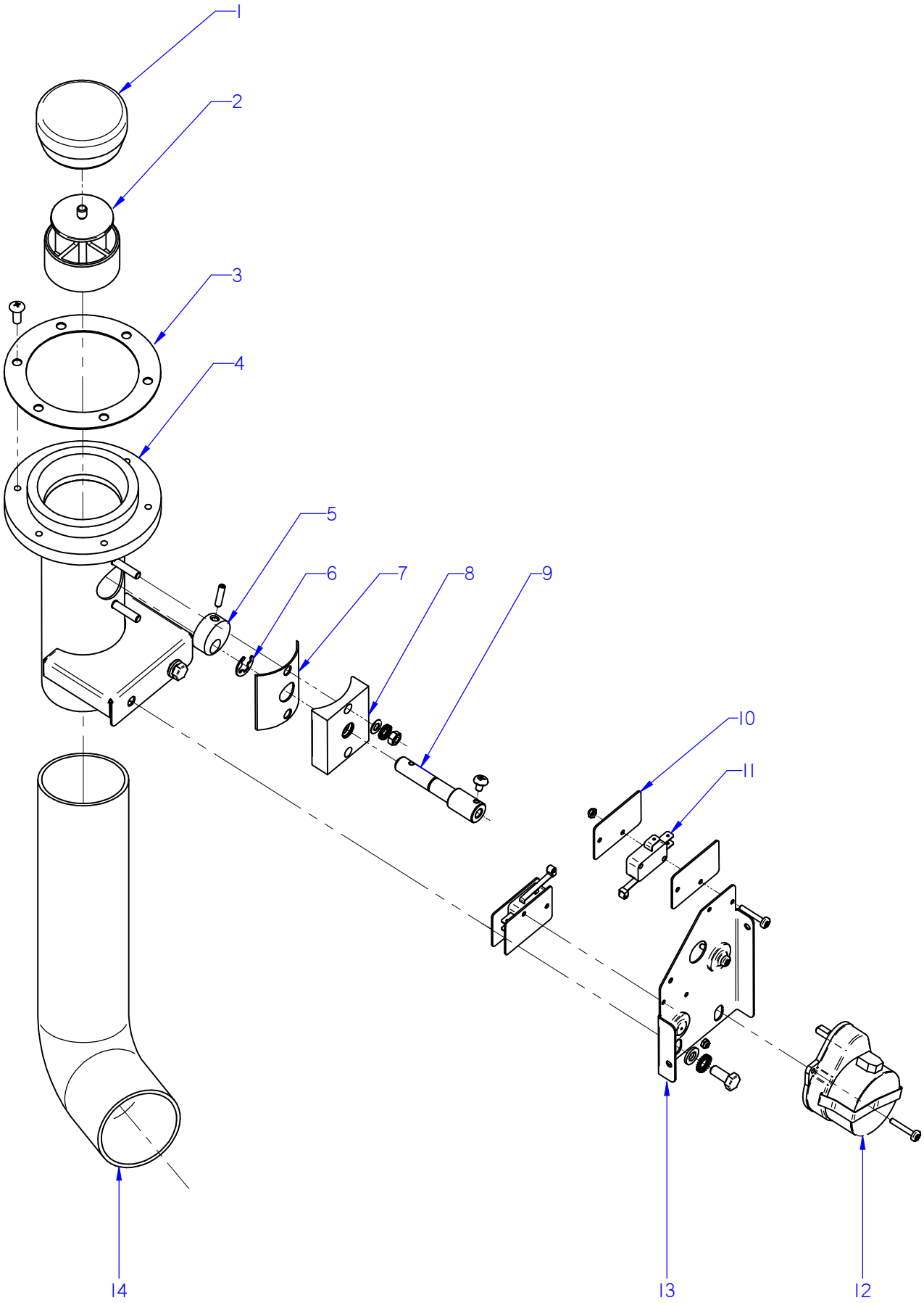


ITEM MARCADO EN COLOR = REPUESTO RECOMENDADO
COLOURED ITEM = RECOMMENDED SPARE PART

| Nº plano / N º plane | Firma | Fecha / Date | Denominación / Denomination: CHIMENEA / FLUEPIPE | Lamina / Sheet | |
|---|---|---|---|---|---|
| C-3207 | | 2014-02 | HORNO AE-102 W / APE-102 W | 5 | Fagor Industrial S.Coop. FAGOR Oñate |

| MOD. | HORNOS / OVEN | ZONA / ZONE | CHIMENEA / FLUEPIPE | PLANO DIAGRAM | C-3207 |
|---|---|---|---|---|---|

| ITEM | CODIGO REFERENCE | DENOMINACION | DENOMINATION | AE-102 W | APE-102 W | | | | | | | ELIMINADO ELIMINATED | INTRODUCID. INTRODUCED | NOTAS |
|---|---|---|---|---|---|---|---|---|---|---|---|---|---|---|
| 1 | 12024520 | RETENCION DE VAPORES | CLOSE CHIMNEY | 1 | 1 | | | | | | | | | |
| 2 | 12024500 | GUIA RETENCION VAPORES | STEAM RETAINER GUIDE | 1 | 1 | | | | | | | | | |
| 3 | 12023576 | JUNTA BASE CHIMENEA | FLUEPIPE BASE SEAL | 1 | 1 | | | | | | | | | |
| S/Nº | 12095516 | JUNTA TORICA 5x1 | O-RING 5x1 | 6 | 6 | | | | | | | | | |
| | 12010242 | TORNIL. APLASTADO M5X13 A 304 | FLAT SCREW M.5x13 | 6 | 6 | | | | | | | | | |
| 4 | 12022868 | CONJUNTO CHIMENEA | COMPLETE CHIMNEY | 1 | 1 | | | | | | | 01.05.14 | | |
| 4 | 12104226 | CONJUNTO CHIMENEA | COMPLETE CHIMNEY | 1 | 1 | | | | | | | | 01.05.14 | |
| | 12010126 | REMACHE EXAGONAL M.6 | HEXAGONAL RIVET M.6 | 2 | 2 | | | | | | | | | |
| 5 | 12024328 | LEVA EJE CHIMENEA | FLUEPIPE SHAFT CAM | 1 | 1 | | | | | | | | | |
| | 12010258 | VARILLA ROSCADA M4X16 | THREADED ROD M4X16 | 1 | 1 | | | | | | | | | |
| 6 | 12010014 | ARANDELA DE SEGURIDAD Ø8 | SAFETY WASHER Ø8 | 1 | 1 | | | | | | | | | |
| 7 | 12023497 | JUNTA EJE CHIMENEA | FLUEPIPE SHAFT SEAL | 1 | 1 | | | | | | | | | |
| 8 | 12024436 | GUIA EJE CHIMENEA | FLUEPIPE SHAFT GUIDE | 1 | 1 | | | | | | | 01.05.14 | | |
| 8 | 12098396 | GUIA EJE CHIMENEA | FLUEPIPE SHAFT GUIDE | 1 | 1 | | | | | | | | 01.05.14 | |
| S/Nº | 12010274 | JUNTA TORICA 9.19x2.62 | O-RING 9.19x2.62 | 1 | 1 | | | | | | | | | |
| | 12009944 | ARANDELA A5 | FLAT WASHER A.5 | 2 | 2 | | | | | | | | | |
| | 12010284 | TUERCA EXAGONAL M5 | HEXAGONAL NUT M.5 | 2 | 2 | | | | | | | | | |
| 9 | 12024435 | EJE CHIMENEA ELECTRICA | ELECTRIC FLUEPIPE SHAFT | 1 | 1 | | | | | | | 01.05.14 | | |
| 9 | 12104228 | EJE CHIMENEA ELECTRICA | ELECTRIC FLUEPIPE SHAFT | 1 | 1 | | | | | | | | 01.05.14 | |
| | 12009876 | TORNILLO ALOMADO M4X6 ZINC. | CURVED SCREW M4X6 ZINC. | 1 | 1 | | | | | | | | | |
| 10 | 12009985 | PLACA SEPARADORA | SPACER PLATE | 4 | 4 | | | | | | | | | |
| | 12010247 | TORNILLO ALOMADO M3X20 | CURVED SCREW M3X20 | 4 | 4 | | | | | | | | | |
| | 12010289 | TUERCA AUTOBLOCANTE M3 | SELF-LOCKING NUT M3 | 4 | 4 | | | | | | | | | |
| 11 | 12025193 | INTERRUPTOR PUERTA | DOOR SWITCH | 2 | 2 | | | | | | | | | |
| 12 | 12024638 | MOTOR CHIMENEA | FLUEPIPE MOTOR | 1 | 1 | | | | | | | | | |
| 13 | 12022146 | ESCUA. AMARRE MOTOR CHIMEN. | FLUEPIPE MOTOR FASTENING BRAC | 1 | 1 | | | | | | | | | |
| | 12009868 | ARANDELA A6 | WASHER A6 | 2 | 2 | | | | | | | | | |
| | 12009882 | ARANDELA ABANICO A6 A.304 | FAN SHAPED WASHER A.6 | 2 | 2 | | | | | | | | | |
| | 12010186 | TORNILLO EXAGONAL M6X15 A304 | HEXAGONAL SCREW M6X15 | 2 | 2 | | | | | | | | | |
| 14 | 12024122 | TUBO FLEXIBLE Ø53X360 | FLEXIBLE TUBE Ø53X360 | 1 | 1 | | | | | | | | | |
| | 12009962 | ABRAZADERA 40*60 | CLAMP 40*60 | 2 | 2 | | | | | | | | | |

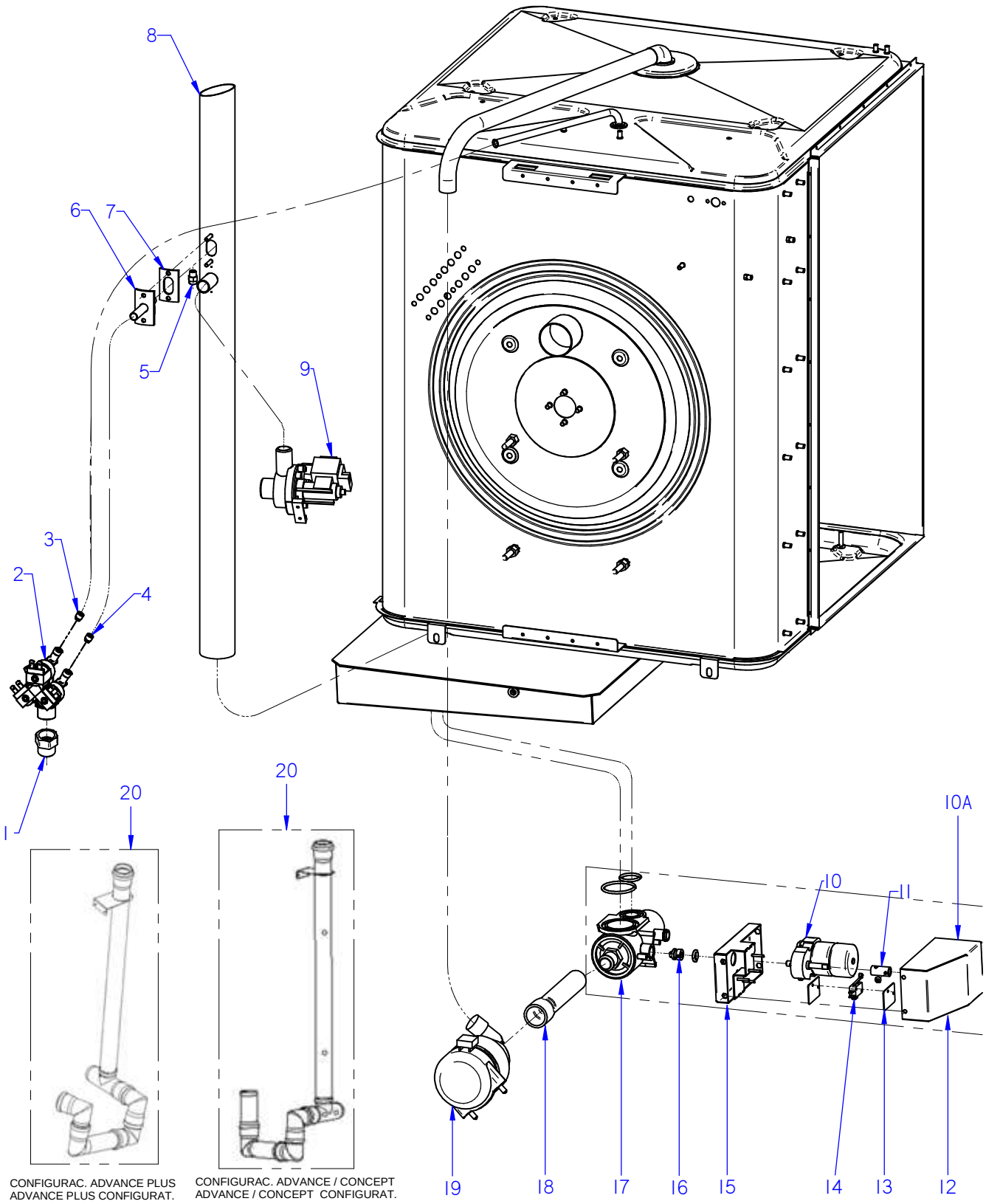


CONFIGURAC. ADVANCE PLUS
ADVANCE PLUS CONFIGURAT.

CONFIGURAC. ADVANCE / CONCEPT
ADVANCE / CONCEPT CONFIGURAT.

ITEM MARCADO EN COLOR = REPUESTO RECOMENDADO
COLOURED ITEM = RECOMMENDED SPARE PART

| Nº plano / N º plane | Firma / Signature | Fecha / Date | Denominación / Denomination: CONDUCCIONES DE AGUA / WATER PIPES | Lamina / Sheet | |
|---|---|---|---|---|---|
| C-3208 | Iban R. | 07-2015 | HORNO AE-102 W / APE-102 W | 6 | Fagor Industrial S.Coop. FAGOR Oñate |

| MOD. | HORNOS / OVEN | ZONA / ZONE | CONDUCCIONES DE AGUA / WATER PIPES | PLANO DIAGRAM | C-3208 |
|---|---|---|---|---|---|

| ITEM | CODIGO REFERENCE | DENOMINACION | DENOMINATION | AE-102 W | APE-102 W | | | | | | | ELIMINADO ELIMINATED | INTRODUCID. INTRODUCED | NOTAS |
|---|---|---|---|---|---|---|---|---|---|---|---|---|---|---|
| 1 | 12098455 | ADAPTADOR AGUA 3/4 | WATER ADAPTER 3/4 | 2 | 2 | | | | | | | | | |
| 2 | 12023921 | ELECTR. 230V AC 50/60Hz 3 VIAS A | SOLENOID 230V AC 50/60Hz 3 V | 1 | 1 | | | | | | | 01.08.14 | | |
| 2 | 12115418 | ELECTR. 230V AC 50/60Hz 3 VIAS A | SOLENOID 230V AC 50/60Hz 3 V | 1 | 1 | | | | | | | | 01.08.14 | |
| 3 | 12024509 | REGULADOR 0,25L. VERDE | REGULATOR 0.25 L. GREEN | 1 | 1 | | | | | | | | | |
| 4 | 12096625 | REGULADOR 1 L MARFIL | CONTROLLER 1L IVORY | 1 | 1 | | | | | | | | | |
| 5 | 12049131 | BOQUILLA 1/8M-B-1-3 | INJECTOR 1/8M-B-1-3 | 1 | 1 | | | | | | | | | |
| 6 | 12039468 | CONDUCC. VAHOS COMPLETO | COMPLETE VAPOUR DUCT | 1 | 1 | | | | | | | | | |
| 7 | 12023605 | JUNTA TUBO INYECTOR | INJECTOR PIPE SEAL | 1 | 1 | | | | | | | | | |
| 8 | 12039505 | CHIMENEA COMPLETA VPE 101 | COMPLET FLUEPIPE VPE 101 | 1 | 1 | | | | | | | | | |
| S/Nº | 12047901 | EMPALME SILICONA Ø53 | SILICONE JOINT Ø53 | 1 | 1 | | | | | | | | | |
| | 12007943 | ABRAZADERA ELASTICA 62*66 | ELAST. CLAMP 62*66 | 2 | 2 | | | | | | | | | |
| 9 | 12039546 | MOTOBOMBA 230V AC 1N 50/60Hz | PUMP 230V AC 50/60Hz 30W 1N | 1 | 1 | | | | | | | | | |
| | 12009944 | ARANDELA A5 | FLAT WASHER A.5 | 2 | 2 | | | | | | | | | |
| | 12009890 | ARANDELA ABANICO A5 A.304 | FAN SHAPED WASHER A.5 | 2 | 2 | | | | | | | | | |
| | 12010221 | TORNILLO EXAGONAL M5X15 | HEXAGONAL BOLT M5X15 | 2 | 2 | | | | | | | | | |
| **10A** | **12093684** | **KIT VALVULA DESAGUE ADVAN.** | **VALVE DRAIN ADVANCE KIT** | _ | **1** | | | | | | | | | |
| 10 | 12024754 | MOTORREDUCTOR 230V AC 1N | MOTOREDUCER 230V AC 1N | _ | 1 | | | | | | | 02.03.15 | | |
| 10 | 12122403 | MOTORREDUCTOR 230V AC 1N | MOTOREDUCER 230V AC 1N | _ | 1 | | | | | | | | 02.03.15 | |
| 11 | 12023906 | CASQUILLO MOTOR MICRO | MICRO MOTOR BUSHING | _ | 1 | | | | | | | | | |
| | 12009876 | TORNILLO ALOMADO M4X6 H.ZIN. | CURVED SCREW M4X6 H.ZIN. | _ | 2 | | | | | | | | | |
| | 12010262 | TORNILLO AVELLANADO M4X15 | COUNTERSUNK SCREW M.4x15 | _ | 2 | | | | | | | | | |
| 12 | 12003203 | TAPA SISTEMA LAVADO | TOP WASH SYSTEM | _ | 1 | | | | | | | 02.03.15 | | |
| 12 | 12122407 | TAPA SISTEMA LAVADO | TOP WASH SYSTEM | _ | 1 | | | | | | | | 02.03.15 | |
| | 12010242 | TORNIL. APLASTADO M5X13 A 304 | FLAT SCREW M.5x13 | _ | 4 | | | | | | | | | |
| 13 | 12009985 | PLACA SEPARADORA | SPACER PLATE | _ | 4 | | | | | | | | | |
| | 12010247 | TORNILLO ALOMADO M3X20 | CURVED SCREW M3X20 | _ | 7 | | | | | | | | | |
| | 12010289 | TUERCA AUTOBLOCANTE M3 | SELF-LOCKING NUT M3 | _ | 7 | | | | | | | | | |
| 14 | 12025193 | INTERRUPTOR PUERTA | DOOR SWITCH | _ | 2 | | | | | | | | | |
| 15 | 12003183 | SOPORTE MICROS LAVADO | MICROS WASH STAND | _ | 1 | | | | | | | 02.03.15 | | |
| 15 | 12122404 | SOPORTE MICROS LAVADO | MICROS WASH STAND | _ | 1 | | | | | | | | 02.03.15 | |
| | 12010163 | REMACHE EXAGONAL M.5 | HEXAGONAL RIVET M.5 | 4 | _ | | | | | | | | | |

| MOD. | HORNOS / OVEN | ZONA / ZONE | CONDUCCIONES DE AGUA / WATER PIPES | PLANO DIAGRAM | C-3208 |
|---|---|---|---|---|---|

| ITEM | CODIGO REFERENCE | DENOMINACION | DENOMINATION | AE-102 W | APE-102 W | | | | | | | ELIMINADO ELIMINATED | INTRODUCID. INTRODUCED | NOTAS |
|---|---|---|---|---|---|---|---|---|---|---|---|---|---|---|
| 16 | 12023796 | PUNTA ACOPLE MOTOR A VALVUL | CONN. POINT MOTOR TO VALVE | _ | 1 | | | | | | | | | |
| S/Nº | 12019645 | JUNTA TORICA Ø10x3.5 | O-RING Ø10X3.5 | _ | 1 | | | | | | | | | |
| S/Nº | 12010273 | MANG. SUJEC. 4X14 DIN1481 | CLAMPING SLEEVE 4x14 DIN 1481 | _ | 1 | | | | | | | | | |
| | 12010081 | JUNTA TORICA Ø52X3,5 | O-RING Ø52X3.5 | _ | 1 | | | | | | | | | |
| | 12010131 | JUNTA TORICA Ø33x3,5 | O-RING Ø33x3.5 | _ | 1 | | | | | | | | | |
| | 12024532 | JUNTA TEFLON VALVULA | TEFLON VALVE BOARD | _ | 2 | | | | | | | | | |
| | 12009181 | JUNTA TEFLON VALVULA | TEFLON VALVE BOARD | _ | 2 | | | | | | | | | |
| 18 | 12024425 | GOMA VALVULA BOMBA | PUMP VALVE RUBBER | _ | 1 | | | | | | | | | |
| | 12010023 | ABRAZADERA 20-32 | CLAMP 20-32 | _ | 1 | | | | | | | | | |
| | 12009997 | ABRAZADERA 25-40 | CLAMP 25-40 | _ | 1 | | | | | | | | | |
| 19 | 12091648 | MOTOBOMBA230V AC 1N 50/60Hz | MOTOR-PUMP 230V AC1N 50/60 | _ | 1 | | | | | | | | | |
| S/Nº | 12025198 | MANGUERA ENTRADA AGUA | WATER INLET HOSE | 1 | 1 | | | | | | | | | |
| S/Nº | 12024463 | CONDENSADOR ELEC. 250V VDE | CONDENSER ELEC. 250V VDE | 1 | 1 | | | | | | | | | |
| 20 | 12047404 | MOD CONJUNTO DESAGUE ADV | ADV DRAIN SET MODEL | 1 | 1 | | | | | | | | | |

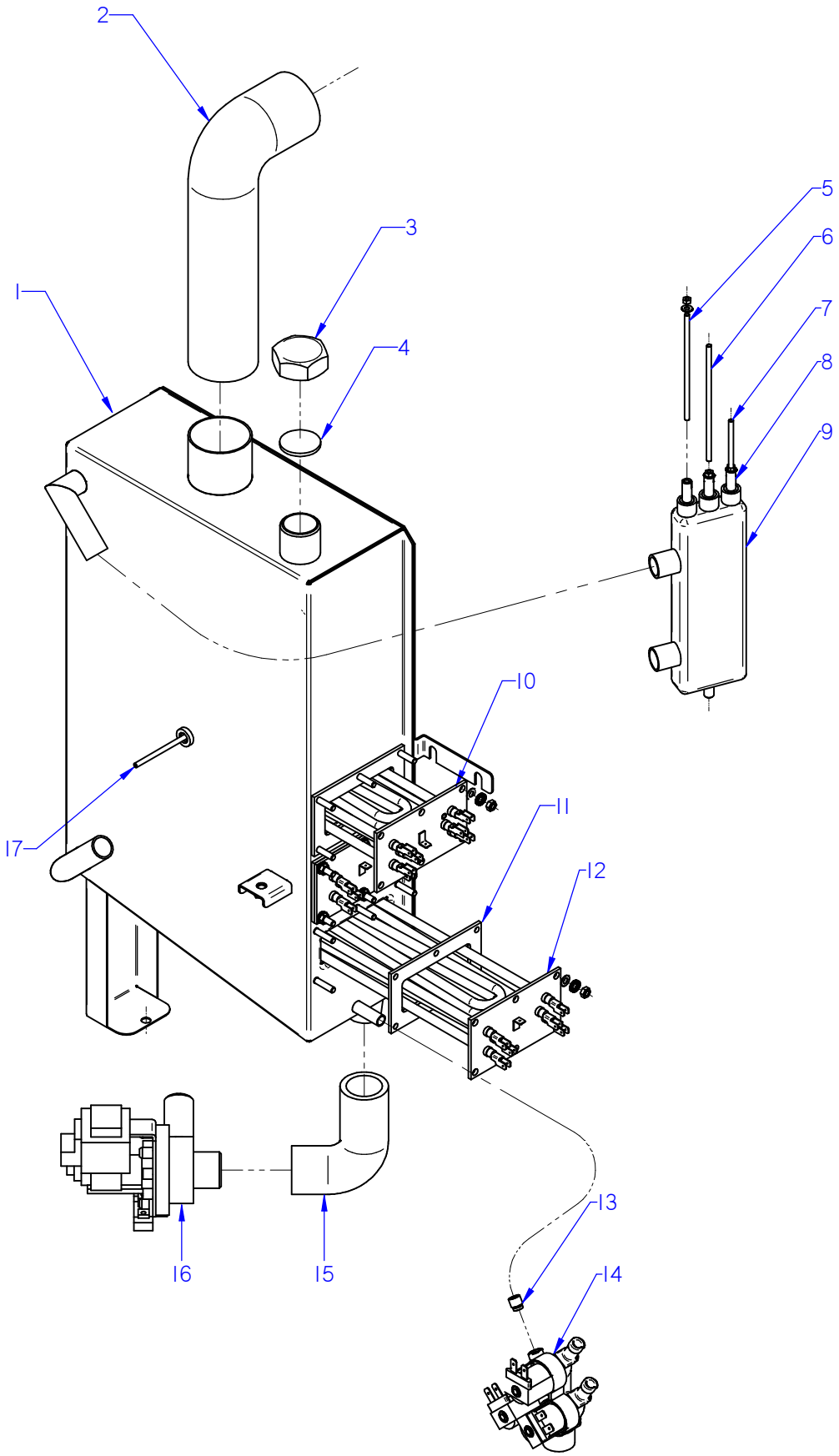


ITEM MARCADO EN COLOR = REPUESTO RECOMENDADO
COLOURED ITEM = RECOMMENDED SPARE PART

| Nº plano / N º plane | Firma | Fecha / Date | Denominación / Denomination: CIRCUITO DE VAPOR / STEAM CIRCUIT | Lamina / Sheet | |
|---|---|---|---|---|---|
| C-3209 | | 2014-02 | HORNO AE-102 W / APE-102 W | 7 | Fagor Industrial S.Coop. FAGOR Oñate |

| MOD. | HORNOS / OVEN | ZONA / ZONE | CIRCUITO DE VAPOR / STEAM CIRCUIT | PLANO DIAGRAM | C-3209 |
|---|---|---|---|---|---|

| ITEM | CODIGO REFERENCE | DENOMINACION | DENOMINATION | AE-102 W | APE-102 W | | | | | | | ELIMINADO ELIMINATED | INTRODUCID. INTRODUCED | NOTAS |
|---|---|---|---|---|---|---|---|---|---|---|---|---|---|---|
| **1** | **12046053** | **KIT GENERADOR VAPOR 102** | **STEAM GENERATOR 102 KIT** | **1** | **1** | | | | | | | | | |
| S/Nº | 11000157 | TUBO SILICONA Tº Ø 26*18 | HIGH SILICON PIPE Tº Ø 26*18 | 3 | 3 | | | | | | | | | |
| | 12009628 | ABRAZADERA ELASTICA 26,7*28,1 | ELAST. CLAMP 26,7*28,1 | 6 | 6 | | | | | | | | | |
| 2 | 12047930 | EMPALME GENERADOR 061 | GENERATOR JOINT 601 | 1 | 1 | | | | | | | | | |
| | 12009962 | ABRAZADERA 40*60 | CLAMP 40*60 | 2 | 2 | | | | | | | | | |
| S/Nº | 12047901 | EMPALME SILICONA Ø53 | SILICONE JOINT Ø53 | 2 | 2 | | | | | | | | | |
| 3 | 12009699 | TUERCA TAPON 1" | PLUG NUT 1" | 1 | 1 | | | | | | | | | |
| 4 | 12009884 | ARANDELA Ø32 | WASHER Ø32 | 1 | 1 | | | | | | | | | |
| 5 | 12023573 | ELECTRODO ALTO | HIGH LEVEL ELECTRODE | 1 | 1 | | | | | | | | | |
| 6 | 12023574 | ELECTRODO BAJO | LOW LEVEL ELECTRODE | 1 | 1 | | | | | | | | | |
| 7 | 12023575 | ELECTRODO DE MASA | EARTH ELECTRODE | 1 | 1 | | | | | | | | | |
| | 12009987 | ARANDELA A4 | FLAT WASHER A4 | 3 | 3 | | | | | | | | | |
| | 12009839 | TUERCA EXAGONAL M4 | HEXAGONAL NUT M.4º | 3 | 3 | | | | | | | | | |
| 8 | 12024460 | GUIA AISLANTE | INSULATION GUIDE | 3 | 3 | | | | | | | | | |
| 9 | 12024419 | BOTE DE NIVELES | LEVELS VESSEL | 1 | 1 | | | | | | | 02.06.14 | | |
| 9 | 12113061 | BOTE DE NIVELES INOX | LEVELS VESSEL S.STEEL | 1 | 1 | | | | | | | | 02.06.14 | |
| | 12010044 | TUERCA EXAGONAL M8 PLASTIC | HEXAGONAL NUT M8 PLASTIC | 1 | 1 | | | | | | | | | |
| 10 | 12024752 | RESISTENCIA 3x3000W 230V | RESISTOR 3x3000W 230V | 1 | 1 | | | | | | | | | |
| 11 | 12023680 | JUNTA CIERRE RESISTENCIAS | RESISTOR SEAL | 3 | 3 | | | | | | | | | |
| | 12010284 | TUERCA EXAGONAL M5 | HEXAGONAL NUT M.5 | 18 | 18 | | | | | | | | | |
| | 12009944 | ARANDELA A5 | FLAT WASHER A.5 | 18 | 18 | | | | | | | | | |
| | 12009890 | ARANDELA ABANICO A5 A.304 | FAN SHAPED WASHER A.5 | 18 | 18 | | | | | | | | | |
| 12 | 12024747 | RESISTENCIA 3x3000W | RESISTOR 3x3000W | 2 | 2 | | | | | | | | | |
| 13 | 12096626 | REGULADOR 8 L AZUL | BLUE REGULATOR 8L | 1 | 1 | | | | | | | | | |
| 14 | 12023921 | ELECTR. 230V AC 50/60Hz 3 VIAS A | SOLENOID 230V AC 50/60Hz 3 V | 1 | 1 | | | | | | | 01.08.14 | | |
| 14 | 12115418 | ELECTR. 230V AC 50/60Hz 3 VIAS A | SOLENOID 230V AC 50/60Hz 3 V | 1 | 1 | | | | | | | | 01.08.14 | |
| S/Nº | 11000083 | T. GOMA NEGRA Ø17*10 | BLACK RUBBER PIPE Ø17*10 | 1 | 1 | | | | | | | | | |
| | 12010036 | ABRAZADERA 12*20 | CLAMP 12-20 | 2 | 2 | | | | | | | | | |
| 15 | 12039649 | TUBO DESAGÜE GENERADOR | DRAIN TUBE GENERATOR | 1 | 1 | | | | | | | | | |
| 16 | 12039546 | MOTOBOMBA 230V AC 1N 50/60Hz | PUMP 230V AC 50/60Hz 30W 1N | 1 | 1 | | | | | | | | | |
| 17 | 12098386 | CON.TERMOPAR VAPOR 10/21UL | THERMOCOUPLE UNIT10/21 UL | 1 | 1 | | | | | | | | | |

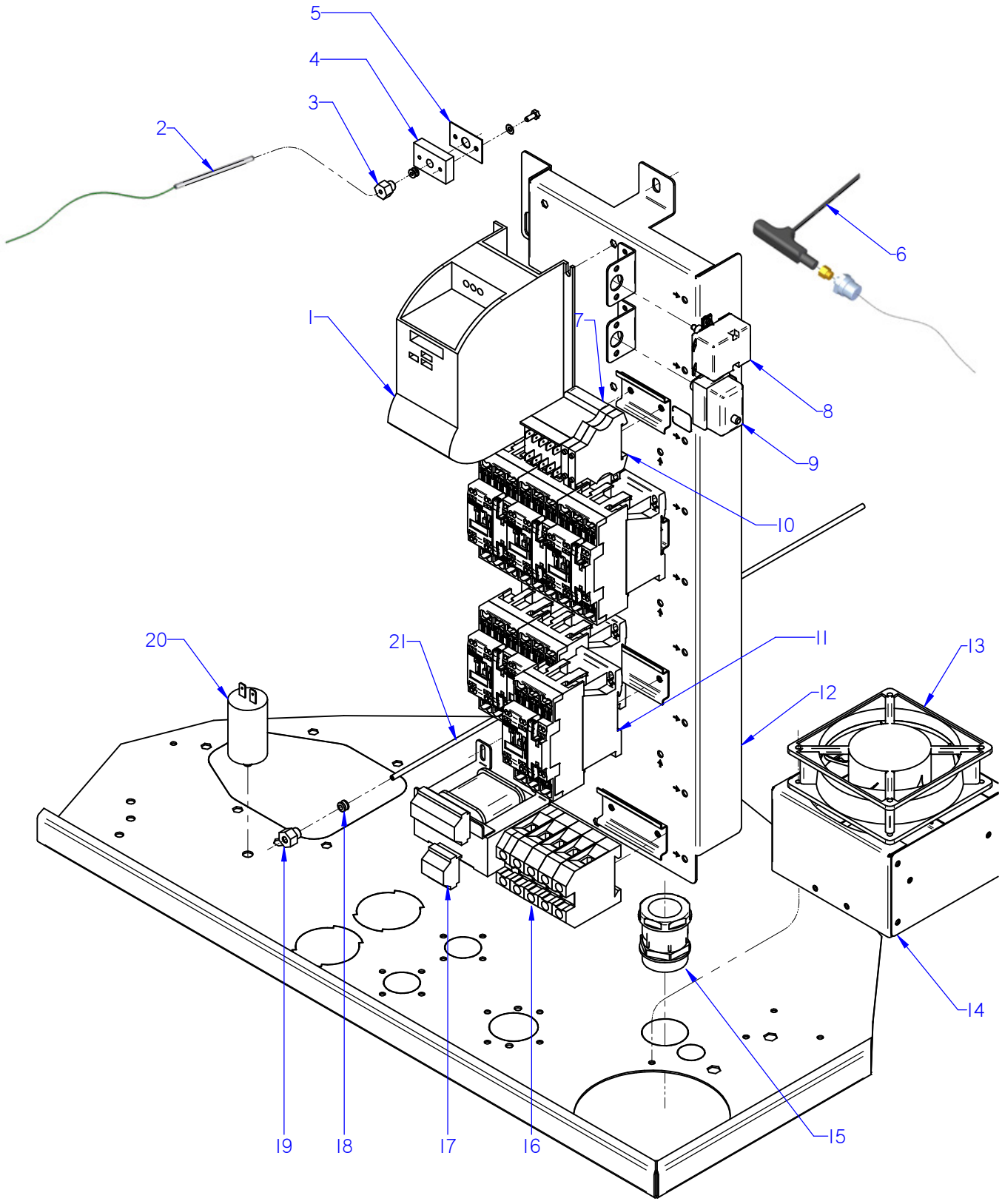


ITEM MARCADO EN COLOR = REPUESTO RECOMENDADO
COLOURED ITEM = RECOMMENDED SPARE PART

| Nº plano / N º plane | Firma | Fecha / Date | Denominación / Denomination: CUADRO ELECTRICO / ELECTRIC PANEL | Lamina / Sheet | |
|---|---|---|---|---|---|
| C-3210 | | 2014-02 | HORNO AE-102 W / APE-102 W | 8 | Fagor Industrial S.Coop. FAGOR Oñate |

| MOD. | HORNOS / OVEN | ZONA / ZONE | CUADRO ELECTRICO / ELECTRIC PANEL | PLANO DIAGRAM | C-3210 |
|---|---|---|---|---|---|

| ITEM | CODIGO REFERENCE | DENOMINACION | DENOMINATION | AE-102 W | APE-102 W | | | | | | | ELIMINADO ELIMINATED | INTRODUCID. INTRODUCED | NOTAS |
|---|---|---|---|---|---|---|---|---|---|---|---|---|---|---|
| 1 | 12048798 | REP VARIADOR REGULADO ADV | REGULATED VARIATOR ADV | 1 | 1 | | | | | | | | | |
| | 12009987 | ARANDELA A4 | FLAT WASHER A.4 | 6 | 6 | | | | | | | | | |
| | 12009928 | ARANDELA ABANICO A4 A.304 | FAN SHAPED WASHER A.4 | 6 | 6 | | | | | | | | | |
| | 12010278 | TORNILLO ALOMADO M4X10 | CURVED SCREW M.4x10 | 6 | 6 | | | | | | | | | |
| S/Nº | 12025235 | CONECTOR PASO 3,96MM 8 VIAS | CONNECTOR ROUTES 3,96MM 8 | 1 | 1 | | | | | | | | | |
| 2 | 12098378 | CONJ. TERMOPAR CAMARA K UL | THERMOCOUPLE UNIT K UL | 1 | 1 | | | | | | | | | |
| 3 | 12023581 | RACORD CIERRE SONDA | PROBE CLOSING ADAPTOR | 2 | 2 | | | | | | | | | |
| S/Nº | 12024247 | BICONO CIERRE SONDA | PROBE CLOSING BICONE | 1 | 1 | | | | | | | | | |
| 4 | 12023737 | BASE CIERRE SONDA | FIXING CORE PROBE | 1 | 1 | | | | | | | | | |
| 5 | 12023504 | JUNTA PASAMUROS SIMPLE | SIMPLE | 1 | 1 | | | | | | | | | |
| | 12009987 | ARANDELA A4 | FLAT WASHER A.4 | 4 | 4 | | | | | | | | | |
| | 12010249 | TORNILLO EXAGONAL M4X10 | HEXAGONAL BOLT M4X10 | 4 | 4 | | | | | | | | | |
| 6 | 12039548 | SONDA PINCHO ADVANCE | ADVANCE PROBE PINCHO | 1 | 1 | | | | | | | | | |
| | 12010110 | ARANDELA Ø 8.4X20X1.5 | FLAT WASHER Ø 8.4X20X1.5 | 1 | 1 | | | | | | | | | |
| | 12040566 | CONTRATUERCA H 1/4" | COUNTERNUT H 1/4" | 1 | 1 | | | | | | | | | |
| 7 | 12024011 | CONTACTOR 230 V. 50-60 HZ | 230 V. 50-60 HZ CONTACTOR | 1 | 1 | | | | | | | | | |
| 8 | 12024591 | TERMOSTATO LIMITADOR 10/21 | LIMITER THERMOSTAT10/21 | 1 | 1 | | | | | | | | | |
| 9 | 12024884 | TERMOSTATO LIMITADOR CORTE | THERMOSTAT LIMITER | 1 | 1 | | | | | | | | | |
| S/Nº | 12022001 | SOPORTE TERMOS VAPOR | THERMOSTAT SUPPORT | 2 | 2 | | | | | | | | | |
| | 12023499 | TUERCA M.10x1 EGO 00.00600.075 | NUT M.10x1 EGO 00.00600.075 | 2 | 2 | | | | | | | | | |
| 10 | 12025158 | BORNAS PORTA FUSIBLES | FUSE HOLDER TERMINAL | 2 | 2 | | | | | | | | | |
| 11 | 12041014 | CONTAC. 230V AC 50/60Hz 40A3V | CONTAC. 230V AC 50/60Hz 40A3 | 6 | 6 | | | | | | | | | |
| 12 | 12041913 | CUADRO ELECTRICO 102 APE | ELECTRICAL PANEL 102 APE | 1 | 1 | | | | | | | | | |
| | 12010158 | REMACHE EXAGONAL M.4 | HEXAGONAL RIVET M.4 | 6 | 6 | | | | | | | | | |
| | 12009944 | ARANDELA A5 | FLAT WASHER A.5 | 3 | 3 | | | | | | | | | |
| | 12009890 | ARANDELA ABANICO A5 A.304 | FAN SHAPED WASHER A.5 | 3 | 3 | | | | | | | | | |
| | 12010221 | TORNILLO EXAGONAL M5x15 | HEXAGONAL SCREW M.5x15 | 3 | 3 | | | | | | | | | |
| | 12009868 | ARANDELA PLANA INOX 6MM | WASHER FLAT 6 MM INOX. | 1 | 1 | | | | | | | | | |
| | 12009882 | ARANDELA ABANICO A6 A.304 | FAN SHAPED WASHER A.6 | 1 | 1 | | | | | | | | | |
| | 12010255 | TORNILLO EXAGONAL M6 INOX. | HEXAGONAL SCREW M6 INOX. | 1 | 1 | | | | | | | | | |
| 13 | 12091475 | VENTILADOR 230V.50-60HZ 12W UL | FAN 230V 50/60HZ 12W UL | 2 | 2 | | | | | | | | | |

| MOD. | HORNOS / OVEN | ZONA / ZONE | CUADRO ELECTRICO / ELECTRIC PANEL | PLANO DIAGRAM | C-3210 |
|---|---|---|---|---|---|

| ITEM | CODIGO REFERENCE | DENOMINACION | DENOMINATION | AE-102 W | APE-102 W | | | | | | | ELIMINADO ELIMINATED | INTRODUCID. INTRODUCED | NOTAS |
|---|---|---|---|---|---|---|---|---|---|---|---|---|---|---|
| 14 | 12097167 | MODULO FILTRO COMP. ADV 1/1 | MODULE FILTER COMP.ADV 1/1 | 1 | 1 | | | | | | | | | |
| 15 | 12009851 | PRENSA ESTOPAS PG 29 D38 | STUFFING BOX PG 29 D38 | 1 | 1 | | | | | | | | | |
| | 12009973 | CONTRATUERCA GAES | COUNTERNUT GAES | 1 | 1 | | | | | | | | | |
| | 12009888 | JUNTA GOMA GAES 29 806.2900.0 | RUBBER BOARD (GAES) | 1 | 1 | | | | | | | | | |
| 16 | 12024420 | BORNA PASO 35MM | GREY PHASE 35 TERMINAL | 3 | 3 | | | | | | | | | |
| | 12024515 | BORNA TIERRA 35MM | EARTH TERMINAL 35mm | 1 | 1 | | | | | | | | | |
| | 12040923 | BORNAS PORTA FUSIBLES 13A 4 | FUSE HOLDER TERMINALS 13A | 4 | 4 | | | | | | | | | |
| 17 | 12091129 | TRANSFORMADOR 1N 65W 30V UL | TRANSFORMER 1N 65W 30V UL | 1 | 1 | | | | | | | | | |
| 18 | 12043409 | BICONO CIERRE SONDA Ø4 | PROBE CLOSING BICONE Ø4 | 1 | 1 | | | | | | | | | |
| 19 | 12041049 | RACORD CIERRE SONDA Ø 4 | PROBE CLOSING ADAPTOR Ø 4 | 1 | 1 | | | | | | | | | |
| 20 | 12025135 | CONDENSADOR 3 µF | CONDENSER 3 µF | _ | 1 | | | | | | | | | |
| 21 | 12098384 | CONJ.TERMOPAR VAPOR K Ø4 UL | STEAM THERMOC. UNIT K Ø4 UL | 1 | 1 | | | | | | | | | |

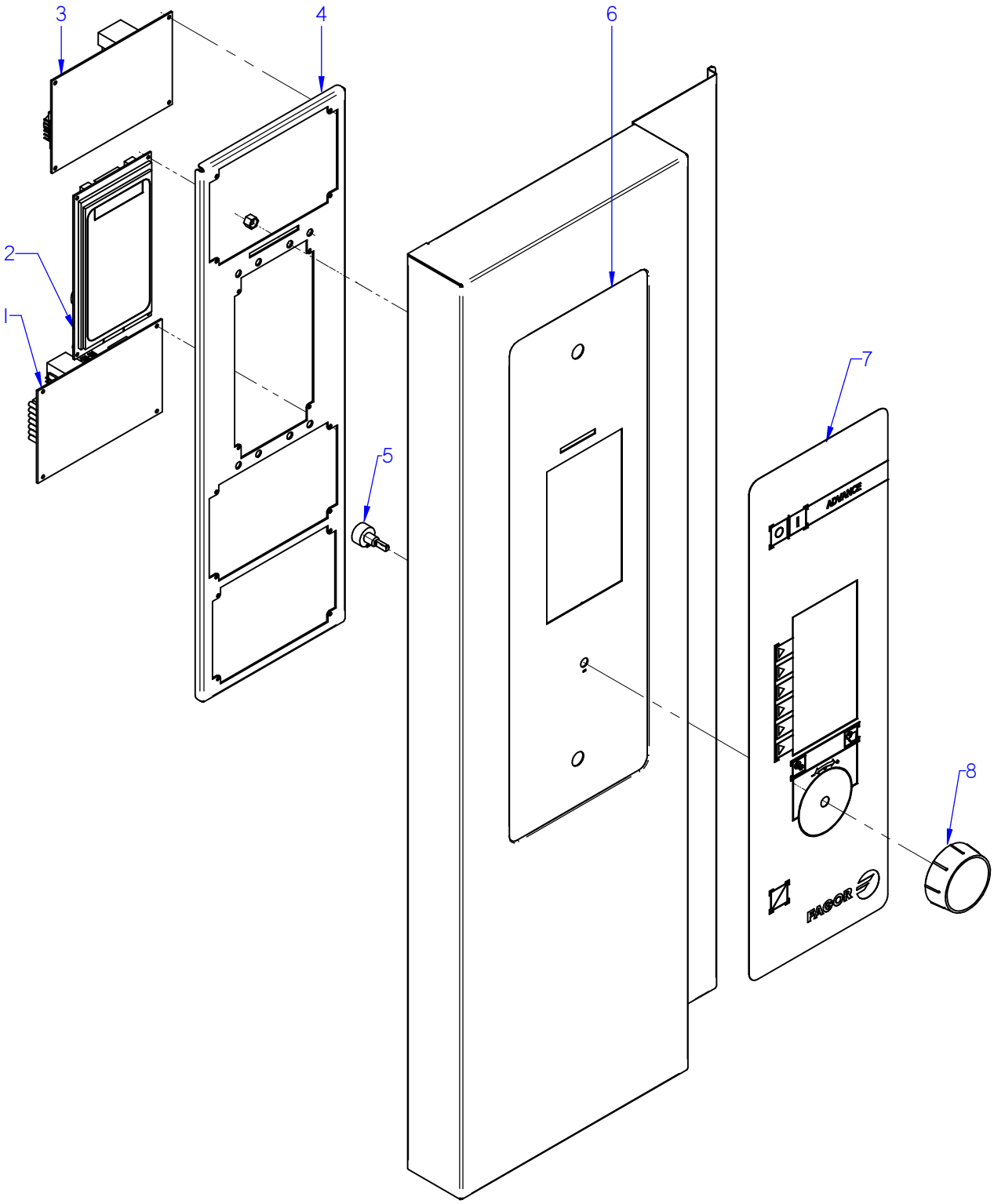


ITEM MARCADO EN COLOR = REPUESTO RECOMENDADO
COLOURED ITEM = RECOMMENDED SPARE PART

| Nº plano / N º plane | Firma | Fecha / Date | Denominación / Denomination: PORTAMANDOS / CONTROL HOLDER | Lamina / Sheet | |
|---|---|---|---|---|---|
| C-3211 | | 2014-02 | HORNOS AE-102 W | 9 | Fagor Industrial S.Coop. FAGOR Oñate |

| MOD. | HORNOS / OVEN | ZONA / ZONE | CONJUNTO ELECTRICO PORTAMANDOS / CONTROL HOLDER ELECTRIC UNIT | PLANO DIAGRAM | C-3211 |
|---|---|---|---|---|---|

| ITEM | CODIGO REFERENCE | DENOMINACION | DENOMINATION | AE-102 W | | | | | | | | ELIMINADO ELIMINATED | INTRODUCID. INTRODUCED | NOTAS |
|---|---|---|---|---|---|---|---|---|---|---|---|---|---|---|
| 1 | 12046659 | CONTROL TARJETA CAM.12V AC . | CARD CONTROL 12V AC 50/60Hz | 1 | | | | | | | | | | |
| 2 | 12046672 | TARJETA PORTAMAND. VISUAL | CONTROL PANEL VISUAL CARD | 1 | | | | | | | | | | |
| 3 | 12046670 | CONTROL TARJETA CALD. 12V AC 50/6 | CARD CONTROL 12V AC 50/60Hz | 1 | | | | | | | | | | |
| 4 | 12039536 | SOPORTE CIRCUITOS ADVANCE | CIRCUIT SUPPORT ADVANCE | 1 | | | | | | | | | | |
| | 12009944 | ARANDELA A5 | FLAT WASHER A.5 | 4 | | | | | | | | | | |
| | 12010281 | TUERCA EXAGONAL AUT M5 H. ZI. | HEXAGONAL NUT M5 H. ZINC, | 4 | | | | | | | | | | |
| 5 | 12043405 | ENCODER GAMA ADVANCE | ADVANCE RANGE ENCODER | 1 | | | | | | | | | | |
| 6 | 12093236 | FRENTE PORTAM. AE-AG COMP. | CONTROL PANEL FRONT AE-AG | 1 | | | | | | | | | | |
| S/Nº | 12041815 | JUNTA PORTAMANDOS ADV PLUS | CONTROL PANEL SEAL ADV PLUS | 1 | | | | | | | | | | |
| 7 | 12044139 | SERIGRAFIA ADVANCE | ADVANCE SERIGRAPHY | 1 | | | | | | | | | | |
| 8 | 12044074 | BOTON DE MANDO ADV | ADV CONTROL BUTTON | 1 | | | | | | | | | | |

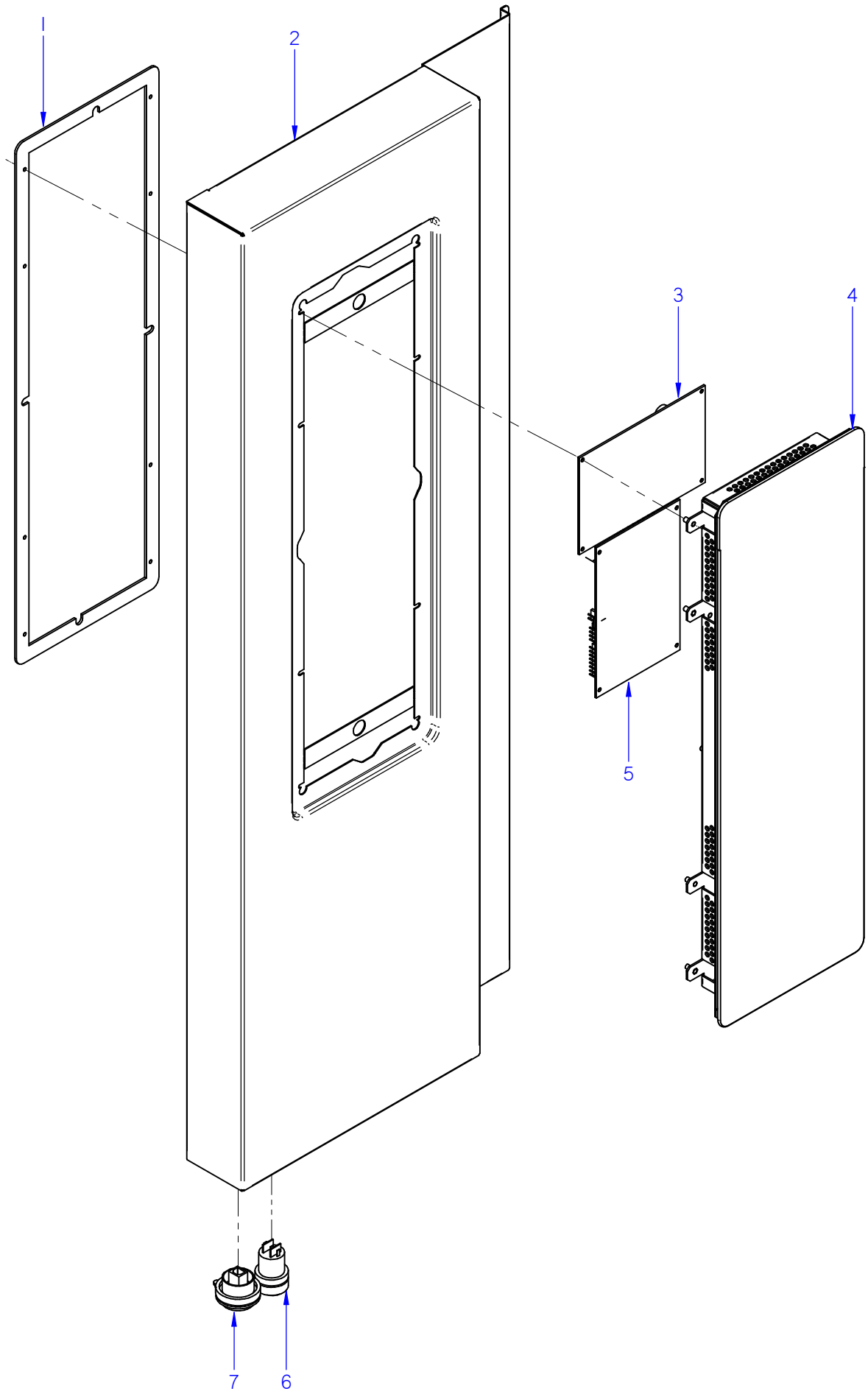


ITEM MARCADO EN COLOR = REPUESTO RECOMENDADO
COLOURED ITEM = RECOMMENDED SPARE PART

| Nº plano / N º plane | Firma | Fecha / Date | Denominación / Denomination: PORTAMANDOS / CONTROL HOLDER | Lamina / Sheet | |
|---|---|---|---|---|---|
| C-3212 | | 2014-02 | HORNO APE-102 W | 9 | Fagor Industrial S.Coop. FAGOR Oñate |

| MOD. | HORNOS / OVEN | ZONA / ZONE | CONJUNTO ELECTRICO PORTAMANDOS / CONTROL HOLDER ELECTRIC UNIT | PLANO DIAGRAM | C-3212 |
|---|---|---|---|---|---|

| ITEM | CODIGO REFERENCE | DENOMINACION | DENOMINATION | APE-102 W | | | | | | | | ELIMINADO ELIMINATED | INTRODUCID. INTRODUCED | NOTAS |
|---|---|---|---|---|---|---|---|---|---|---|---|---|---|---|
| 1 | 12041815 | JUNTA PORTAMANDOS ADV PLUS | CONTROL PANEL SEAL ADV PLUS | 1 | | | | | | | | | | |
| | 12010289 | TUERCA AUTOB. M3 DIN985 | SELF-LOCK NUT M3 DIN985 | 6 | | | | | | | | | | |
| | 12010288 | CLIP SUJECIÓN RÁPIDA Ø 4 | RAPID CONNECT CLIP Ø 4 | 12 | | | | | | | | | | |
| 2 | 12041356 | PORTAMANDOS 102 APE | CONTROL PANEL 102 APE | 1 | | | | | | | | | | |
| 3 | 12046670 | CONTROL TARJETA CALD. 12V AC 50/6 | CARD CONTROL 12V AC 50/60Hz | 1 | | | | | | | | | | |
| 4 | 12046579 | PLAT ADV PLUS CON SOFTWARE | ADV PLUS SOFTWARE PLATF. | 1 | | | | | | | | 25.05.15 | | |
| 4 | 12121349 | PLAT ADV PLUS CON SOFTWARE | ADV PLUS SOFTWARE PLATF. | 1 | | | | | | | | | 25.05.15 | |
| 5 | 12046659 | CONTROL TARJETA CAM.12V AC . | CARD CONTROL 12V AC 50/60Hz | 1 | | | | | | | | | | |
| 6 | 12093379 | PULSADOR SERIE MICRO UL | MICRO SWITCH SERIES UL | 1 | | | | | | | | | | |
| 7 | 12024064 | CONECTOR USB VISUAL PLUS | VISUAL PLUS USB CONNECTOR | 1 | | | | | | | | | | |
| S/Nº | 12023647 | TAPA USB VISUAL PLUS | VISUAL PLUS USB COVER | 1 | | | | | | | | | | |

| MOD. | HORNOS / OVEN | ZONA / ZONE | VARIOS / MISCELLANEOUS | PLANO DIAGRAM | |
|---|---|---|---|---|---|

| ITEM | CODIGO REFERENCE | DENOMINACION | DENOMINATION | AE-102 W | APE-102 W | | | | | | | ELIMINADO ELIMINATED | INTRODUCID. INTRODUCED | NOTAS |
|---|---|---|---|---|---|---|---|---|---|---|---|---|---|---|
| | 12098051 | MANUAL DE USO USA ADV | USER MANUALUSA ADV | 1 | _ | | | | | | | | | |
| | 12098052 | MANUAL DE USO USA ADV PLUS | USER MANUAL USA ADV PLUS | _ | 1 | | | | | | | | | |
| | 12098050 | MANUAL INSTALACION USA ADV | INSTALLATION MANUAL USA ADV | 1 | 1 | | | | | | | | | |
| | 12098475 | ESQUEMA TEORICO APE UL | THEORETIC. DIAGRAM APE UL | 1 | 1 | | | | | | | | | |
| | 12041895 | PLANO DE MONTAJE ACE, AE, APE | ASSEMBLY PLAN ACE, AE, APE | 1 | 1 | | | | | | | | | |
| | 12098171 | INST. ELECTRICA APE,AE, 101,UL | ELEC. INSTALL. APE,AE,101, UL | 1 | 1 | | | | | | | | | |
| | 12098261 | CABLEAD. RESISTEN. APE 102 UL | RESISTOR WIRING APE 102 UL | 1 | 1 | | | | | | | | | |
| | 12098251 | CABLEADO FUERZA 102, 201 UL | POWER WIRE 102, 201 UL | 1 | 1 | | | | | | | | | |
| | 12024569 | CABLEADO LUZ INTERIOR HVG10- | INTERIOR LIGHT WIRING HVG10- | 1 | 1 | | | | | | | | | |
| | 12023696 | CABLEADO BMF | WIRING BMF | 1 | 1 | | | | | | | | | |
| | 12040567 | CABLEADO LAVADO 201-102-202 | WIRING CABLE 201-102-202 | _ | 1 | | | | | | | | | |
| | 12009059 | CABLEADO LAVADO 06,101 | WIRING CABLE 06,101 | _ | 1 | | | | | | | | | |
| | 12008976 | CABLEADO PULSADOR RESET | RESET BUTTON WIRING | _ | 1 | | | | | | | | | |
| | 12009257 | CABLE. TRANSFORMADOR TFT UL | TRANSFORMER WIRING TFT UL | _ | 1 | | | | | | | | | |
| | 12023775 | CABLE USB VISUAL PLUS 1,5M | VISUAL PLUS USB CABLE 1,5M | _ | 1 | | | | | | | | | |
| | 12009277 | CD HACCP VISUAL COMPLETO | HACCP CD COMPLETE VISUAL | _ | 1 | | | | | | | | | |
| | 12022177 | LEYENDA HORNOS | LEGEND OVENS | _ | 1 | | | | | | | | | |

| MOD. | HORNOS / OVEN | ZONA / ZONE | REPUESTOS RECOMENDADOS<br>RECOMMENDED SPARE PART | PLANO<br>DIAGRAM | |
|---|---|---|---|---|---|

| ITEM | CODIGO REFERENCE | DENOMINACION | DENOMINATION | AE-102 W | APE-102 W | | | | | | | ELIMINADO ELIMINATED | INTRODUCID. INTRODUCED | NOTAS |
|---|---|---|---|---|---|---|---|---|---|---|---|---|---|---|
| **16** | **12046020** | **KIT PUERTA 102** | **DOOR 102 KIT** | **1** | **1** | | | | | | | | | C-3204 |
| **1** | **12046043** | **KIT CRISTAL INTER. 102** | **102 INNER GLASS KIT** | **1** | **1** | | | | | | | | | C-3204 |
| 7 | 12039311 | BASE BISAGRA INFERIOR PUERTA | LOWER DOOR HINGE BASE | 1 | 1 | | | | | | | | | C-3204 |
| 8 | 12044774 | ASA COMPLETA 1/1 ADVANCE | HANDLE 1/1 ADVANCE | 1 | 1 | | | | | | | | | C-3204 |
| 9 | 12024560 | INTERRUPTOR MAGNETICO AC | MAGNETIC SWITCH AC | 1 | 1 | | | | | | | | | C-3204 |
| 13 | 12023849 | ANCLAJE PUERTA | DOOR ANCHORING | 1 | 1 | | | | | | | | | C-3204 |
| 15 | 12041578 | JUNTA PUERTA COMPL.102 ADV | DOOR JOINT 102 ADV | 1 | 1 | | | | | | | | | C-3204 |
| 13 | 12040977 | DUCHA | SHOWER | 1 | 1 | | | | | | | | | C-3205 |
| 20 | 12025161 | ELECTROVALV. 230VAC 50/60Hz 1V | SOLENOID VALVE 230VAC 1 V | 1 | 1 | | | | | | | | | C-3205 |
| 1 | 12024325 | MOTOR 230V AC 3N650KW 1450RPM | MOTOR 230V AC 3N650KW 1450 | 1 | 1 | | | | | | | | | C-3206 |
| 4 | 12024510 | RETEN 17X28X7V | RETAINER 28x17x7 | 2 | 2 | | | | | | | | | C-3206 |
| 5 | 12010122 | ANILLO DE SEGURIDAD Ø 28X1.2 | SAFETY RING 28x1,2 | 1 | 1 | | | | | | | | | C-3206 |
| 6 | 12024306 | TURBINA RECTA Ø350X127 HANN. | TURBINE RECTA Ø350X127 HAN | 1 | 1 | | | | | | | | | C-3206 |
| 7 | 12023679 | JUNTA RESISTENCIA | RESISTANCE SEAL | 2 | 2 | | | | | | | | | C-3206 |
| 8 | 12024349 | RESISTENCIA INTERIOR 3 X 5KW | INSIDE RESISTANCE 3 X 5KW | 1 | 1 | | | | | | | | | C-3206 |
| 9 | 12024359 | RESISTENCIA EXTERIOR 3 X 5KW | EXTERNAL RESISTANCE 3 X 5KW | 1 | 1 | | | | | | | | | C-3206 |
| 11 | 12025193 | INTERRUPTOR PUERTA | DOOR SWITCH | 2 | 2 | | | | | | | | | C-3207 |
| 12 | 12024638 | MOTOR CHIMENEA | FLUEPIPE MOTOR | 1 | 1 | | | | | | | | | C-3207 |
| 14 | 12024122 | TUBO FLEXIBLE Ø53X360 | FLEXIBLE TUBE Ø53X360 | 1 | 1 | | | | | | | | | C-3207 |
| 2 | 12115418 | ELECTR. 230V AC 50/60Hz 3 VIAS A | SOLENOID 230V AC 50/60Hz 3 V | 1 | 1 | | | | | | | | | C-3208 |
| 9 | 12039546 | MOTOBOMBA 230V AC 1N 50/60Hz | PUMP 230V AC 50/60Hz 30W 1N | 1 | 1 | | | | | | | | | C-3208 |
| **10A** | **12093684** | **KIT VALVULA DESAGUE ADVAN.** | **VALVE DRAIN ADVANCE KIT** | **_** | **1** | | | | | | | | | C-3016 |
| 19 | 12091648 | MOTOBOMBA230V AC 1N 50/60Hz | MOTOR-PUMP 230V AC1N 50/60 | _ | 1 | | | | | | | | | C-3208 |
| 20 | 12047404 | MOD CONJUNTO DESAGUE ADV | ADV DRAIN SET MODEL | 1 | 1 | | | | | | | | | C-3208 |
| **1** | **12046053** | **KIT GENERADOR VAPOR 102** | **STEAM GENERATOR 102 KIT** | **1** | **1** | | | | | | | | | C-3209 |
| 2 | 12047930 | EMPALME GENERADOR 061 | GENERATOR JOINT 601 | 1 | 1 | | | | | | | | | C-3209 |
| 5 | 12023573 | ELECTRODO ALTO | HIGH LEVEL ELECTRODE | 1 | 1 | | | | | | | | | C-3209 |
| 6 | 12023574 | ELECTRODO BAJO | LOW LEVEL ELECTRODE | 1 | 1 | | | | | | | | | C-3209 |
| 7 | 12023575 | ELECTRODO DE MASA | EARTH ELECTRODE | 1 | 1 | | | | | | | | | C-3209 |
| 10 | 12024752 | RESISTENCIA 3x3000W 230V | RESISTOR 3x3000W 230V | 1 | 1 | | | | | | | | | C-3209 |
| 11 | 12023680 | JUNTA CIERRE RESISTENCIAS | RESISTOR SEAL | 3 | 3 | | | | | | | | | C-3209 |

| MOD. | HORNOS / OVEN | ZONA / ZONE | REPUESTOS RECOMENDADOS<br>RECOMMENDED SPARE PART | PLANO<br>DIAGRAM | |
|---|---|---|---|---|---|

| ITEM | CODIGO REFERENCE | DENOMINACION | DENOMINATION | AE-102 W | APE-102 W | | | | | | | ELIMINADO ELIMINATED | INTRODUCID. INTRODUCED | NOTAS |
|---|---|---|---|---|---|---|---|---|---|---|---|---|---|---|
| 12 | 12024747 | RESISTENCIA 3x3000W | RESISTOR 3x3000W | 2 | 2 | | | | | | | | | C-3209 |
| 14 | 12115418 | ELECTR. 230V AC 50/60Hz 3 VIAS A | SOLENOID 230V AC 50/60Hz 3 V | 1 | 1 | | | | | | | | | C-3209 |
| 16 | 12039546 | MOTOBOMBA 230V AC 1N 50/60Hz | PUMP 230V AC 50/60Hz 30W 1N | 1 | 1 | | | | | | | | | C-3209 |
| 17 | 12098386 | CON.TERMOPAR VAPOR 10/21UL | THERMOCOUPLE UNIT10/21 UL | 1 | 1 | | | | | | | | | C-3209 |
| 1 | 12048798 | REP VARIADOR REGULADO ADV | REGULATED VARIATOR ADV | 1 | 1 | | | | | | | | | C-3210 |
| 2 | 12098378 | CONJ. TERMOPAR CAMARA K UL | THERMOCOUPLE UNIT K UL | 1 | 1 | | | | | | | | | C-3210 |
| 6 | 12039548 | SONDA PINCHO ADVANCE | ADVANCE PROBE PINCHO | 1 | 1 | | | | | | | | | C-3210 |
| 8 | 12024591 | TERMOSTATO LIMITADOR 10/21 | LIMITER THERMOSTAT10/21 | 1 | 1 | | | | | | | | | C-3210 |
| 9 | 12024884 | TERMOSTATO LIMITADOR CORTE | THERMOSTAT LIMITER | 1 | 1 | | | | | | | | | C-3210 |
| 13 | 12091475 | VENTILADOR 230V.50-60HZ 12W UL | FAN 230V 50/60HZ 12W UL | 2 | 2 | | | | | | | | | C-3210 |
| 17 | 12091129 | TRANSFORMADOR 1N 65W 30V UL | TRANSFORMER 1N 65W 30V UL | 1 | 1 | | | | | | | | | C-3210 |
| 18 | 12043409 | BICONO CIERRE SONDA Ø4 | PROBE CLOSING BICONE Ø4 | 1 | 1 | | | | | | | | | C-3210 |
| 20 | 12025135 | CONDENSADOR 3 µF | CONDENSER 3 µF | _ | 1 | | | | | | | | | C-3210 |
| 21 | 12098384 | CONJ.TERMOPAR VAPOR K Ø4 UL | STEAM THERMOC. UNIT K Ø4 UL | 1 | 1 | | | | | | | | | C-3210 |
| 1 | 12046659 | CONTROL TARJETA CAM.12V AC . | CARD CONTROL 12V AC 50/60Hz | 1 | _ | | | | | | | | | C-3211 |
| 2 | 12046672 | TARJETA PORTAMAND. VISUAL | CONTROL PANEL VISUAL CARD | 1 | _ | | | | | | | | | C-3211 |
| 3 | 12046670 | CONTROL TARJETA CALD. 12V AC 50/6 | CARD CONTROL 12V AC 50/60Hz | 1 | _ | | | | | | | | | C-3211 |
| 5 | 12043405 | ENCODER GAMA ADVANCE | ADVANCE RANGE ENCODER | 1 | _ | | | | | | | | | C-3211 |
| 7 | 12044139 | SERIGRAFIA ADVANCE | ADVANCE SERIGRAPHY | 1 | _ | | | | | | | | | C-3211 |
| 1 | 12041815 | JUNTA PORTAMANDOS ADV PLUS | CONTROL PANEL SEAL ADV PLUS | _ | 1 | | | | | | | | | C-3212 |
| 3 | 12046670 | CONTROL TARJETA CALD. 12V AC 50/6 | CARD CONTROL 12V AC 50/60Hz | _ | 1 | | | | | | | | | C-3212 |
| 4 | 12121349 | PLAT ADV PLUS CON SOFTWARE | ADV PLUS SOFTWARE PLATF. | _ | 1 | | | | | | | | | C-3212 |
| 5 | 12046659 | CONTROL TARJETA CAM.12V AC . | CARD CONTROL 12V AC 50/60Hz | _ | 1 | | | | | | | | | C-3212 |
| 6 | 12093379 | PULSADOR SERIE MICRO UL | MICRO SWITCH SERIES UL | _ | 1 | | | | | | | | | C-3212 |
| 7 | 12024064 | CONECTOR USB VISUAL PLUS | VISUAL PLUS USB CONNECTOR | _ | 1 | | | | | | | | | C-3212 |
| | | | | | | | | | | | | | | |
| | | | | | | | | | | | | | | |
| | | | | | | | | | | | | | | |
| | | | | | | | | | | | | | | |
| | | | | | | | | | | | | | | |
| | | | | | | | | | | | | | | |

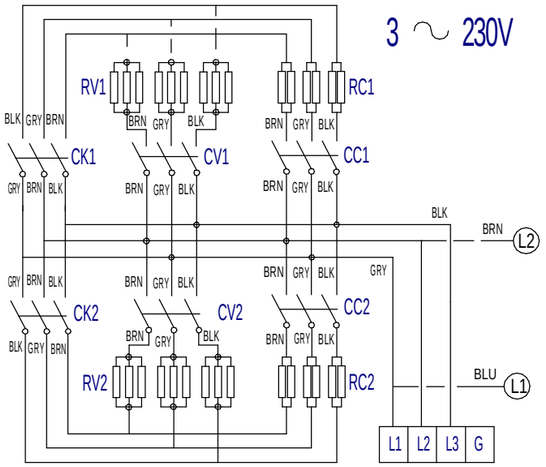


| | |
|---|---|
| Mod. 061, 101 | RC1=3x3KW |
| Mod. 201 | RC1=3x6KW |
| Mod. 102 | RC1=3x5KW |
| Mod. 202 | RC1=6x5KW |

| | |
|---|---|
| Mod. 101 | RC2=3x3KW |
| Mod. 201 | RC2=3x6KW |
| Mod. 102 | RC2=3x5KW |
| Mod. 202 | RC2=6x5KW |

| | |
|---|---|
| Mod. 061, 101 | RV1=3x3KW |
| Mod. 201, 102 | RV1=6x3KW |
| Mod. 202 | RV1=9x3KW |
| Mod. 101, 102, 201 | RV2=3x3KW |
| Mod. 202 | RV2=9x3KW |

APE 061 W, APE 101 W,
APE 201 W, APE 102 W,
APE 202 W

AE 061 W, AE 101 W,
AE 201 W, AE 102 W,
AE 202 W

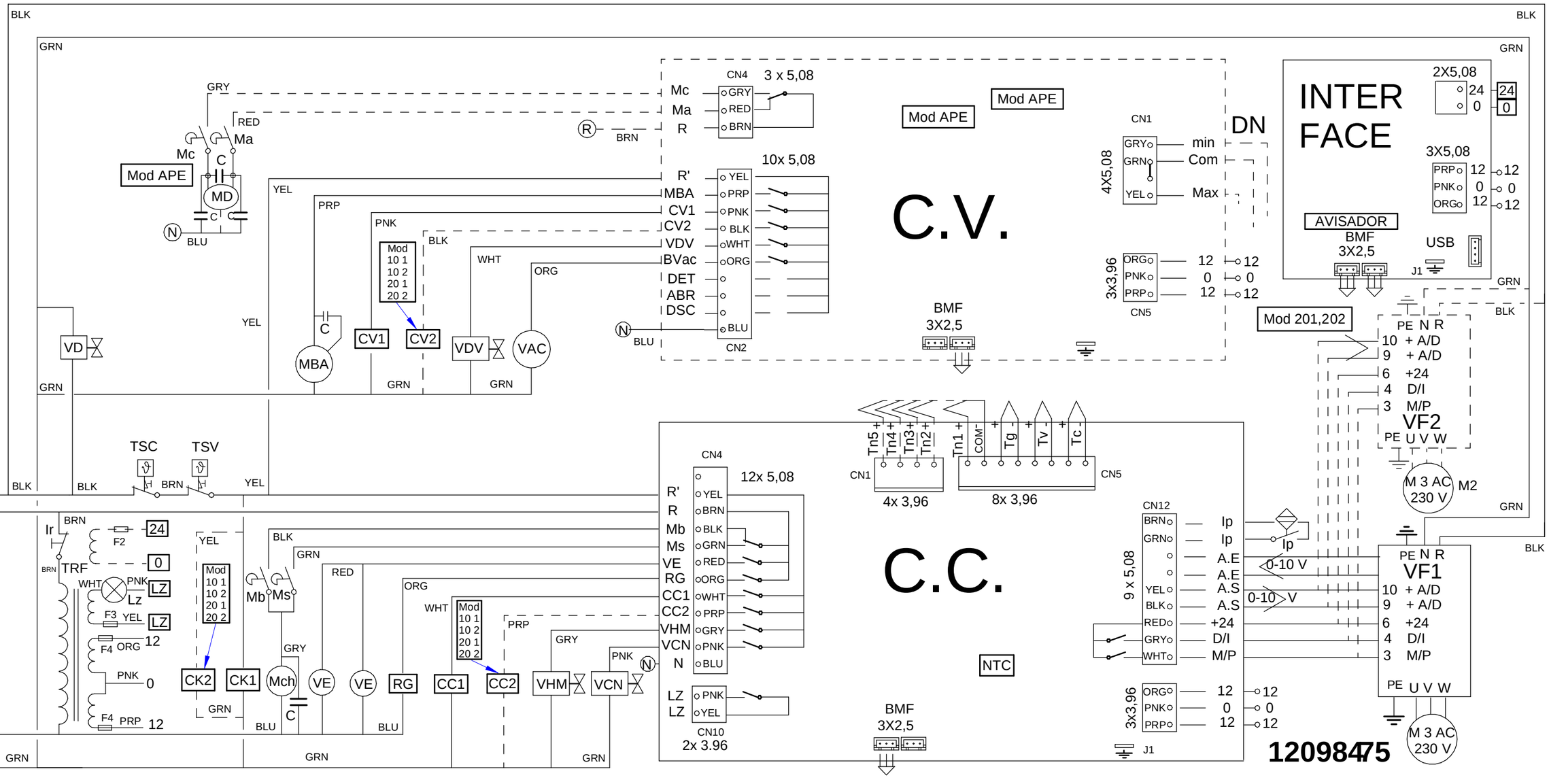

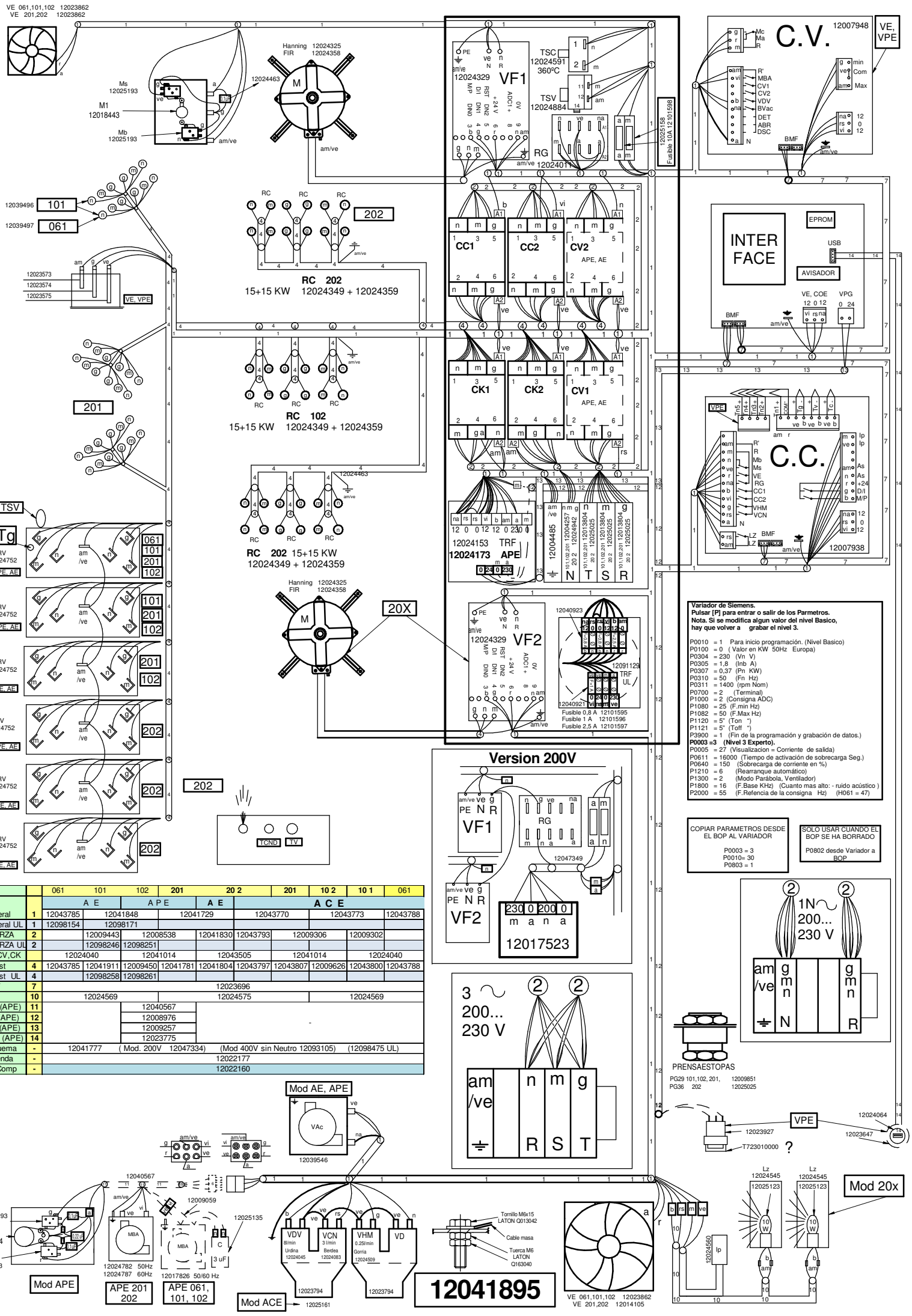


**Variador de Siemens.**
**Pulsar [P] para entrar o salir de los Parmetros.**
**Nota. Si se modifica algun valor del nivel Basico, hay que volver a grabar el nivel 3.**

P0010 = 1 Para inicio programación. (Nivel Basico)
P0100 = 0 ( Valor en KW 50Hz Europa)
P0304 = 230 (Vn V)
P0305 = 1,8 (Inb A)
P0307 = 0,37 (Pn KW)
P0310 = 50 (Fn Hz)
P0311 = 1400 (rpm Nom)
P0700 = 2 (Terminal)
P1000 = 2 (Consigna ADC)
P1080 = 25 (F.min Hz)
P1082 = 50 (F.Max Hz)
P1120 = 5" (Ton ")
P1121 = 5" (Toff ")
P3900 = 1 (Fin de la programación y grabación de datos.)
**P0003 =3 (Nivel 3 Experto).**
P0005 = 27 (Visualizacion = Corriente de salida)
P0611 = 16000 (Tiempo de activación de sobrecarga Seg.)
P0640 = 150 (Sobrecarga de corriente en %)
P1210 = 6 (Rearranque automático)
P1300 = 2 (Modo Parábola, Ventilador)
P1800 = 16 (F.Base KHz) (Cuanto mas alto: - ruido acústico )
P2000 = 55 (F.Refencia de la consigna Hz) (H061 = 47)

COPIAR PARAMETROS DESDE EL BOP AL VARIADOR
P0003 = 3
P0010= 30
P0803 = 1

SOLO USAR CUANDO EL BOP SE HA BORRADO
P0802 desde Variador a BOP

| | | 061 | 101 | 102 | 201 | 20 2 | 201 | 10 2 | 10 1 | 061 |
|---|---|---|---|---|---|---|---|---|---|---|
| | | A E | | A P E | | A E | | A C E | | |
| General | 1 | 12043785 | 12041848 | | 12041729 | | 12043770 | 12043773 | | 12043788 |
| General UL | 1 | 12098154 | 12098171 | | | | | | | |
| FUERZA | 2 | | 12009443 | 12008538 | | 12041830 | 12043793 | 12009306 | 12009302 | |
| FUERZA UL | 2 | | 12098246 | 12098251 | | | | | | |
| CC,CV,CK | | 12024040 | | 12041014 | | 12043505 | | 12041014 | 12024040 | |
| Resist | 4 | 12043785 | 12041911 | 12009450 | 12041781 | 12041804 | 12043797 | 12043807 | 12009626 | 12043800 | 12043788 |
| Resist UL | 4 | | 12098258 | 12098261 | | | | | | |
| BMF | 7 | 12023696 | | | | | | | | |
| Lz | 10 | 12024569 | | | | 12024575 | | 12024569 | | |
| Lav (APE) | 11 | | | 12040567 | | | | | | |
| Rst (APE) | 12 | | | 12008976 | | | | | | |
| TFT (APE) | 13 | | | 12009257 | | | | | | |
| USB (APE) | 14 | | | 12023775 | | | | | | |
| Esquema | - | 12041777 | ( Mod. 200V 12047334) | | | (Mod 400V sin Neutro 12093105) | | (12098475 UL) | | |
| Leyenda | - | 12022177 | | | | | | | | |
| Ind.Comp | - | 12022160 | | | | | | | | |

| | ESPAÑOL | FRANÇAIS | ENGLISH | DEUTSCH | ITALIANO |
|---|---|---|---|---|---|
| BEC | Bujía Encendido Cámara | Bougie Allumage Chambre | Chamber Spark Plug | Zündkerze Einschalten Garraum | Candela di Accensione Camera |
| BEV | Bujía Encendido Caldera | Bougie Allumage Chaudière | Boiler Spark Plug | Zündkerze Einschalten Boile | Candela di Accensione Caldaia |
| C.C. | Control Camara | Contrôle Chambre | Chamber Control | Steuerung Garraum | Controllo Camera |
| C.E.C | Control Combustión Cámara | Contrôle Combustion Chambre | Chamber Combustion Control | Steuerung Verbrennung Garraum | Controllo Combustione Camera |
| C.E.V | Control Combustión Caldera | Contrôle Combustion Chaudière | Boiler Combustion Control | Steuerung Verbrennung Boiler | Controllo Combustione Caldaia |
| C.G. | Control Gas | Contrôle Gaz | Control Gas | Steuern Sie Gas | Controlli il gas |
| C.V. | Control Caldera | Contrôle Chaudière | Boiler Control | Steuerung Boiler | Controllo Caldaia |
| CC1, CC2 | Contactor Resistencia Cámara | Contacteur Élément Chauffant Chambre | Chamber Heating Element Contactor | Schütz Heizwiderstand Garraum | Contattore Resistenza Camera |
| CK1, CK2 | Contactor General Calentamiento | Relais Élément Chauffant | Heating Element Relay | Relais Heizwiderstand | Relè Resistenza |
| CV1, CV2 | Contactor Resistencias Caldera | Contacteur Élément Chauffant Chaudière | Boiler Heating Element Contactor | Schütz Heizwiderstand Boiler | Contattore Resistenza Caldaia |
| DEC | Detector Llama Cámara | Détecteur Flamme Chambre | Chamber Flame Detector | Flammendetektor Garraum | Rilevatore di Fiamma Camera |
| DEV | Detector Llama Caldera | Détecteur Flamme Chaudière | Boiler Flame Detector | Flammendetektor Boiler | Rilevatore di Fiamma Caldaia |
| DN | Detector Nivel Caldera | Détecteur Niveau Chaudière | Boiler Level Detector | Pegeldetektor Boiler | Rilevatore Livello Caldaia |
| F | Fusibles | Fusibles | Fuses | Sicherungen | Fusibili |
| FI | Filtro Interferencias | Filtre Interférences | Interference Filter | Störungsfilter | Filtro Interferenze |
| FM | Térmico Motor | Thermique Moteur | Thermal Engine | Thermoschalter Motor | Termico Motore |
| GV1, GV2 | Electro válvula Gas Cámara | Électrovanne Gaz Chambre | Chamber Gas Solenoid Valve | Elektroventil Gas Garraum | Elettrovalvola Gas Camera |
| GV3, GV4 | Electro válvula Gas Caldera | Électrovanne Gaz Chaudière | Boiler Gas Solenoid Valve | Elektroventil Gas Boiler | Elettrovalvola Gas Caldaia |
| Ip | Interruptor Seguridad Puerta | Interrupteur Sécurité Porte | Door Safety Switch | Sicherheitsschalter Tür | Iterruttore Sicurezza Porta |
| Lz | Luz Interior | Éclairage Intérieur | Inner Light | Innenbeleuchtung | Luce Interna |
| M, M2 | Motor Turbina | Moteur Turbine | Turbine Engine | Motor Turbine | Motore Turbina |
| Ma | Interruptor Micro Abierto | Microrupteur Ouvert | Open Microswitch | Mikroschalter Geöffnet | Iterruttore Micro Aperto |
| Mb | Interruptor Micro Bajada | Microrupteur Descente | Drop Microswitch | Mikroschalter Senken | Iterruttore Micro Discesa |
| Mc | Interruptor Micro Cerrado | Microrupteur Fermé | Closed Microswitch | Mikroschalter Geschlossen | Iterruttore Micro Chiuso |
| Mch | Motor Chimenea | Moteur Cheminée | Stack Engine | Motor Abluftkamin | Motore Canna |
| MD | Motor Desague | Moteur évacuation | Drain Engine | Motor Abfluss | Motore scolo |
| Ms | Interruptor Micro Subida | Microrupteur Montée | Rise Microswitch | Mikroschalter Heben | Iterruttore Micro Salita |
| PF | Potenciómetro Selector Funciones | Potentiomètre Sélecteur Fonctions | Functions Selector Potentiometer | Potentiometer Funktionswahlschalter | Potenziometro Selettore Funzioni |
| RC | Resistencias Cámara | Éléments Chauffants Chambre | Chamber Heating Element | Heizwiderstände Garraum | Resistenze Camere |
| RG | Rele General | Relais Général | Main Relay | Hauptrelais | Relè principale |
| RV | Resistencias Caldera | Éléments Chauffants Chaudière | Boiler Heating Element | Heizwiderstände Boiler | Resistenze Caldaia |
| Tc | Sonda Cámara | Sonde Chambre | Chamber Probe | Sonde Garraum | Sonda Camera |
| TCN | Termostato Condensación | Thermostat Condensation | Condensation Thermostat | Thermostat Kondensierung | Termostato Condensazione |
| Tg | Sonda Caldera | Sonde Chaudière | Boiler Probe | Sonde Boiler | Sonda Caldaia |
| Tn | Sonda Núcleo | Sonde Noyau | Core Probe | Kerntemperaturmessonde | Sonda Nucleo |
| TRF | Transformador | Transformateur | Transformer | Transformator | Trasformatore |
| TSC | Termostato Seguridad Cámara | Thermostat Sécurité Chambre | Chamber Safety Thermostat | Sicherheitsthermostat Garraum | Termostato Sicurezza Camera |
| TSV | Termostato Seguridad Caldera | Thermostat Sécurité Chaudière | Boiler Safety Thermostat | Sicherheitsthermostat Boiler | Termostato Sicurezza Caldaia |
| Tv | Sonda Vapor | Sonde Vapeur | Steam Probe | Sonde Dampf | Sonda Vapore |
| VAC | Bomba Vaciado | Pompe Vidange | Vacuum Pump | Ablasspumpe | Pompa scarico |
| MBA | Moto Bomba Aclarado | Pompe Rinçage | Rinsing Pump | Pumpe Ausspülen | Pompa Risciacquo |
| VC1, VC2 | Ventilador Soplante Camara | Ventilateur Soufflant | Blowing Fan | Ventilator Gebläse | Ventilatore Soffiante |
| VCN | Electro válvula Condensación | Électrovanne Condensation | Condensation Solenoid Valve | Elektroventil Kondensierung | Elettrovalvola Condensazione |
| VDV | Electro válvula Llenado Caldera | Électrovanne Remplissage Chaudière | Chamber Filling Solenoid Valve | Elektroventil Füllung Boiler | Elettrovalvola di Riempimento Caldaia |
| VE | Ventilador Cuadro Eléctrico | Ventilateur Tableau Électrique | Fan Switchboard | Ventilator Elektrotafel | Ventilatore Quadro Elettrico |
| VF1,VF2 | Variador de Frecuencia | Variateur Vitesse | Speed Variator | Geschwindigkeitsregler | Variatore di Velocità |
| VHM | Electro válvula Humidificador | Électrovanne Humidificateur | Humidifier Solenoid Valve | Elektroventil Befeuchtungsvorrichtung | Elettrovalvola Umidificatore |
| Vv | Ventilador Soplante Caldera | Ventilateur soufflement chaudière | Boiler Blowing Fan | Durchbrennenventilator zum Dampfkessel | Ventilatore Soffiante caldaia |
| | **COLORES** | **COULEURS** | **COLOUR** | **FARBEN** | **COLORE** |
| a | Azul | Bleu | Blue | Blau | Blu |
| am | Amarillo | Jaune | Yellow | Gelb | Giallo |
| am/ve | Amarillo/verde | Jaune / vert | Yellow / green | Gelb/grün | Giallo/verde |
| b | Blanco | Blanc | White | Weiß | Bianco |
| g | Gris | Gris | Grey | Grau | Grigio |
| m | Marrón | Marron | Brown | Braun | Marrone |
| n | Negro | Noir | Black | Schwarz | Nero |
| na | Naranja | Orange | Orange | Orange | Arancio |
| r | Rojo | Rouge | Red | Rot | Rosso |
| rs | Rosa | Rose | Pink | Rosa | Roseo |
| ve | Verde | Vert | Green | Grün | Verde |
| vi | Violeta | Violet | Purple | Violett | Viola |
| | | | | | T303042000 |