SIMAG

SCN 25

R 134 A VERSION

SPARE PARTS LIST
CATALOGO RICAMBI
CATALOGUE PIÈCES DÉTACHÉES
ERSATZTEILENKATALOG

REV. 03/2015

PAGE PAGINA PAGE SEITE	TABLE OF CONTENTS	INDICE	TABLE DES MATIERES	INHALTVERZEICHNIS
1	TABLE OF CONTENTS	INDICE	TABLE DES MATIERES	INHALTVERZEICHNIS
2/3	UNIT PANELS	ASSIEME MOBILE	ENS. CAROSSERIE	MACHINE GEHAUSE
4/5	REFRIGERANT SYSTEM AIR COOLED	SISTEMA REFRIGERANTE RAFFR. AD ARIA	CIRCUIT FRIGORIFIQUE REFROID. A AIR	GEFRIERSYSTEM LUFTGEKUEHLT
6/7	REFRIGERANT SYSTEM WATER COOLED	SISTEMA REFRIGERANTE RAFFR. AD ACQUA	CIRCUIT FRIGORIFIQUE REFROID. A EAU	GEFRIERSYSTEM WASSERGEKUEHLT
8/9	WATER SYSTEM	CIRCUITO IDRAULICO	CIRCUIT HYDRAULIQUE	WASSER SYSTEM
10/11	CONTROL BOX	SCATOLA DI CONTROLLO	BOITE ELECTRIQUE	SCHALTSCHRANK
12	COMPRESSOR AND ELECTRIC COMPONENT CHARTS	TABELLA COMPRESSORI E COMPONENTI ELETTRICI	LISTE DES COMPRESSEURS ET COMPOSANTS ELECTRIQUE	KOMPRESSOR UND ELEKTRISCHER TEILLISTE

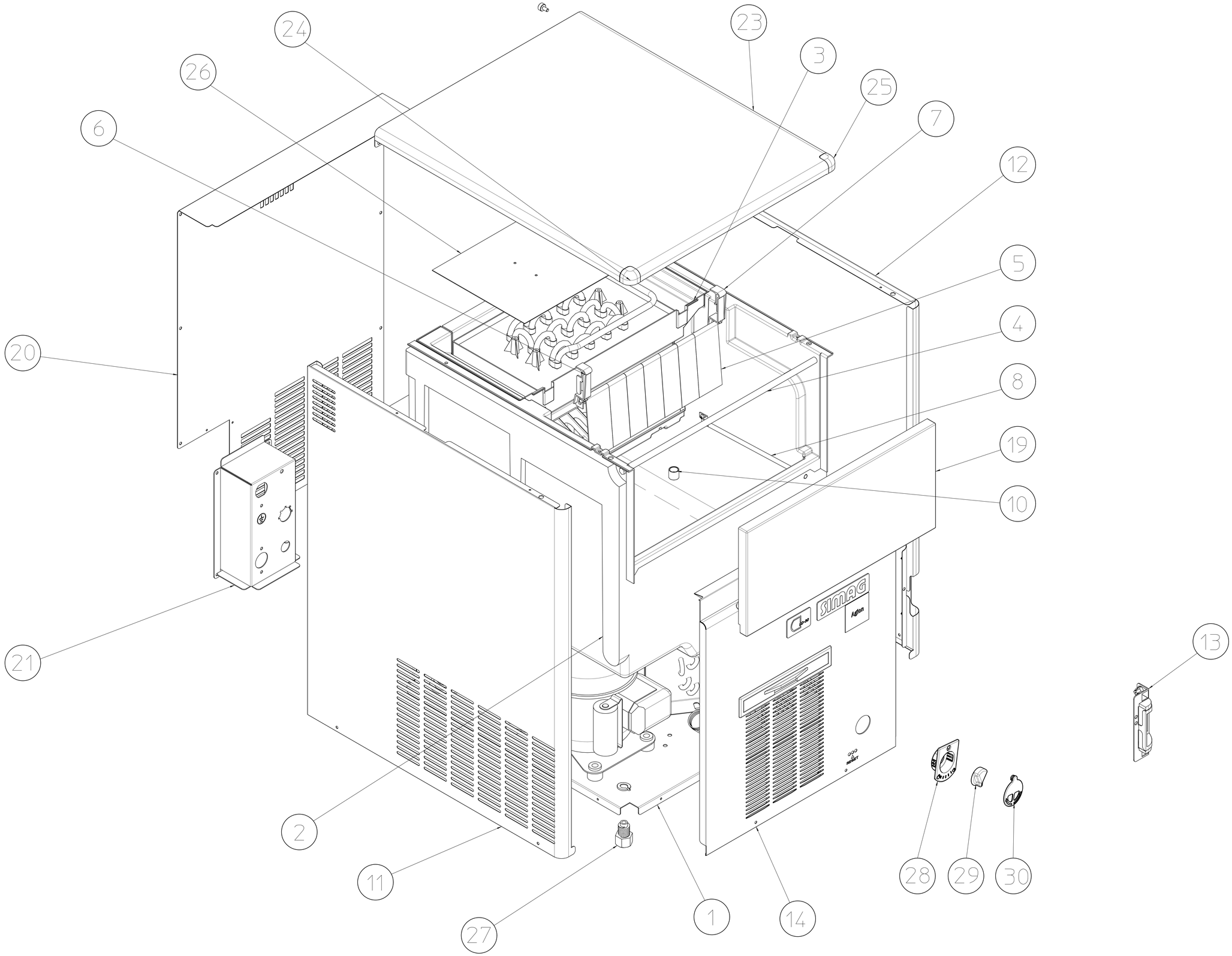
24
23
3
26
25
6
7
12
5
4
20
8
19
10
21
13
2
11
27
1
14
28
29
30

SCN 25 - UNIT PANELS - ASSIEME MOBILE - ENS. CARROSSERIE - MACHINE GEHAUSE

ITEM NO POS. NO REP. NO REF. NO	PART NO CODICE REFERENCE STUECK NR	DESCRIPTION	DESCRIZIONE	DESIGNATION	BESCHREIBUNG
1	782692 00	BASE	PIASTRA DI BASE	PLAQUE DE BASE	GRUNDPLATTE
2	782109 00	INSULATED BIN ASSY	ASSIEME CELLA ISOLATA	ENS. CABINE	ISOLIEREISSPEICHER
3	660627 03	EVAPORATOR HOUSING	INVOLUCRO EVAPORATORE	CHAMBRE INTERIEUR	CELLE INTERN
4	732016 06	BIN DOOR BRACKET	ASTA SPORTELLO	TIGE PORTE	KLAPPENACHSE
5	783171 00R	CURTAIN ASSY	ASSIEME TENDINA	ENS. LAMELLE	ABDECKKLAPPE GESAMTHEIT
6	660388 00	LEFT CURTAIN SUPPORT	SUPP. TENDINA SINISTRO	SUPP. LAMELLE GAUCHE	LINKE ABDECKLAPPE HALTERUNG
7	660388 01	RIGHT CURTAIN SUPPORT	SUPP. TENDINA DESTRO	SUPP.LAMELLE DROITE	RECHTE ABDECKLAPPE HALTERUNG
8	732017 07	BULB HOLDER	TUBO PORTABULBO	TUBE PORTEBULBE	FUEHLERHALTER
10	660570 00	CAP	CAPPUCCIO IN PVC	BOUCHON EN PVC	PVCSTOPFEN
11	722518 00	LEFT SIDE PANEL S.S.	PANNELLO SINISTRO INOX	JOUE GAUCHE ACIER INOX	LINKE GEHÄUSESEITE EDELSTAHL
12	722297 00	RIGHT SIDE PANEL S.S.	PANNELLO DESTRO INOX	JOUE DROITE ACIER INOX	RECHTEGEHÄUSESEITE EDELSTAHL
13	660882 00	FRONT SWITCH PLASTIC PROTEC.	CARTER PROTEZIONE INTERRUTT.	CARTER PROTECTION INTERRUPT	SCHALTERABDECKUNG
14	722301 00	FRONTAL PANEL AIR VERSION	PANNELLO ANTER. VERSIONE ARIA	PANNEAU AVANT PAR AIR	VORDERWAND EDELST. LUFT
	722301 01	FRONTAL PANEL WATER VERS.	PANNELLO ANTER. VERS. ACQUA	PANNEAU AVANT REFR. EAU	VORDERWAND EDELST. WASSER
19	782092 04R	BIN DOOR	SPORTELLO	PORTE CABINE	SPEICHERTUER
20	702507 00	REAR PANEL	PANNELLO POSTERIORE	PANNEAU POSTERIEUR	HINTERE ABDECKUNG
21	702526 00	METAL BRACKET FOR FITTING	SUPPORTO ATTACCHI	SUPPORT DE RACCORDS	METALLTRÄGER
23	722299 00	TOP PANEL S.S.	PANNELLO SUPERIORE INOX	ENS. COUVERCLE	DECKEL GESAMTHEIT
24	660884 01	LEFT TOP CAP	TAPPO IN PLASTICA SINISTRO	CAPUCHON EN PLAST. GAUCHE	PLASTIK PROFEN LINK
25	660884 00	RIGHT TOP CAP	TAPPO IN PLASTICA DESTRO	CAPUCHON EN PLAST. DROITE	PLASTIK PROFEN RECHT
26	650719 03	PLASTIC COVER	COPERTURA IN PLASTICA	PROTECTION EN PLASTIQUE	PLASTIKABDECKUNG
27	650382 01	LEVELLING FOOT	PIEDE REGOLABILE	PIED RÉGLABE	GERÄTEFUSS
28	660717 00	PLASTIC HOUSING	ALLOGGIAMENTO TERM.	ENCADREMENT THER	THERM. PLASTIK SITZ
29	660716 00	PLASTIC KNOB	MANOPOLA	POIGNE	KNOPF
30	660715 00	PLASTIC COVER	COPERCHIO	COUVERCLE	DECKEL

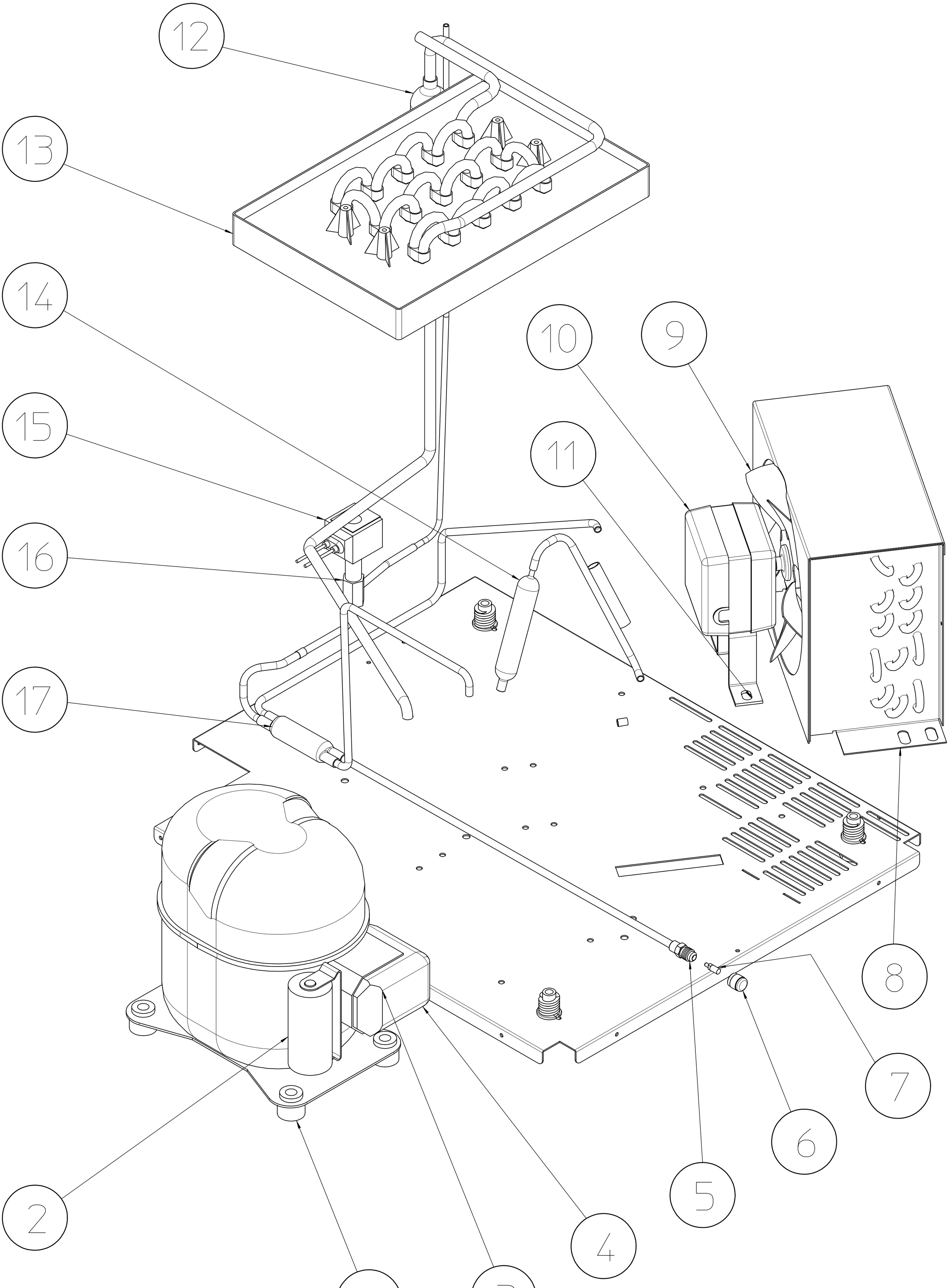
12
13
14
15
16
17
10
9
11
8
7
6
5
4
3
2
1

SCN 25 - REFRIGERANT SYSTEM AIR COOLED - SISTEMA REFRIGERANTE RAFFR. AD ARIA
CIRCUIT FRIGORIFIQUE REFROID. PAR AIR - LUFTGEKÜHLT GEFRIERSYSTEM
up to/fino a/jusq'à/bis Serial Number MJ 28771

ITEM NO POS. NO REP. NO REF. NO	PART NO CODICE REFERENCE STUECK NR	DESCRIPTION	DESCRIZIONE	DESIGNATION	BESCHREIBUNG
1	670101 11	COMPRESSOR	COMPRESSORE	COMPRESSEUR	KOMPRESSOR
2	EMB 2252347	START CAPACITOR	CONDENSATORE D'AVVIAMENTO	CAPACITE DE DEMARRAGE	START CONDENSATOR
3	620478 11	PROTECTOR	PROTETTORE	PROTECTEUR	SCHUTZGERAT
4	620057 71	RELAY	RELE'	RELAIS	RELAIS
5	650109 00	VALVE BODY	CORPO VALVOLA	CORPS DE VANNE	VENTILGEHAUSE
6	670012 00	VALVE PISTON	PISTONCINO VALVOLA	PISTON	VENTILKOLBEN
7	650106 00	VALVE CAP	CAPPUCCIO VALVOLA	CAPUCHON DE VANNE	VENTILKLAPPE
8	620285 00	AIR COOLED CONDENSER	CONDENSATORE AD ARIA	CONDENSEUR	KONDENSATOR
9	620419 32	FAN BLADE	VENTOLA	HELICE	FLUGEL
10	620419 02	FAN MOTOR	MOTOVENTILATORE	MOTO-VENTILATEUR	LÜFTER GESAMTHEIT
11	620419 61	FAN MOTOR BRACKET	STAFFA VENTILATORE	SUPPORT MOTORVENTILATEUR	LÜFTER MOTOR TRAEGER
12	784444 07	ACCUMULATOR ASSY	ASSIEME ACCUMULATORE	ENS. ACCUMULATEUR	SAMMLER UND SAUGLEITUNGEN
13	784605 00	EVAPORATOR	EVAPORATORE	EVAPORATEUR	VERDAMPFER
14	630003 05	DRIER	FILTRO DEUMIDIFICATORE	FILTRE DESHYDRATEUR	TROCKNER
15	620306 48	HOT GAS VALVE COIL	BOBINA VALVOLA GAS CALDO	BOBINE VANNE GAZ CHAUD	HEISSGAZ VENTIL SPULE
16	620306 14	HOT GAS VALVE BODY	CORPO VALVOLA	CORPS DE VANNE	VENTILGEHAUSE
17	630137 00	MECHANICAL FILTER	FILTRO MECCANICO	FILTRE MECANIQUE	MECHANISCHFILTERN

SCN 25 - REFRIGERANT SYSTEM AIR COOLED - SISTEMA REFRIGERANTE RAFFR. AD ARIA
CIRCUIT FRIGORIFIQUE REFROID. PAR AIR - LUFTGEKÜHLT GEFRIERSYSTEM
from/dal/a partir du/von Serial Number MJ 28772

ITEM NO POS. NO REP. NO REF. NO	PART NO CODICE REFERENCE STUECK NR	DESCRIPTION	DESCRIZIONE	DESIGNATION	BESCHREIBUNG
1	670097 08	COMPRESSOR	COMPRESSORE	COMPRESSEUR	KOMPRESSOR
2	620167 29	START CAPACITOR	CONDENSATORE D'AVVIAMENTO	CAPACITE DE DEMARRAGE	START CONDENSATOR
3	620058 65	PROTECTOR	PROTETTORE	PROTECTEUR	SCHUTZGERAT
4	620057 35	RELAY	RELE'	RELAIS	RELAIS
5	650109 00	VALVE BODY	CORPO VALVOLA	CORPS DE VANNE	VENTILGEHAUSE
6	670012 00	VALVE PISTON	PISTONCINO VALVOLA	PISTON	VENTILKOLBEN
7	650106 00	VALVE CAP	CAPPUCCIO VALVOLA	CAPUCHON DE VANNE	VENTILKLAPPE
8	620285 00	AIR COOLED CONDENSER	CONDENSATORE AD ARIA	CONDENSEUR	KONDENSATOR
9	620419 32	FAN BLADE	VENTOLA	HELICE	FLUGEL
10	620419 02	FAN MOTOR	MOTOVENTILATORE	MOTO-VENTILATEUR	LÜFTER GESAMTHEIT
11	620419 61	FAN MOTOR BRACKET	STAFFA VENTILATORE	SUPPORT MOTORVENTILATEUR	LÜFTER MOTOR TRAEGER
12	784444 36	ACCUMULATOR ASSY	ASSIEME ACCUMULATORE	ENS. ACCUMULATEUR	SAMMLER UND SAUGLEITUNGEN
13	784605 00	EVAPORATOR	EVAPORATORE	EVAPORATEUR	VERDAMPFER
14	630003 05	DRIER	FILTRO DEUMIDIFICATORE	FILTRE DESHYDRATEUR	TROCKNER
15	620306 48	HOT GAS VALVE COIL	BOBINA VALVOLA GAS CALDO	BOBINE VANNE GAZ CHAUD	HEISSGAZ VENTIL SPULE
16	620306 14	HOT GAS VALVE BODY	CORPO VALVOLA	CORPS DE VANNE	VENTILGEHAUSE
17	630137 00	MECHANICAL FILTER	FILTRO MECCANICO	FILTRE MECANIQUE	MECHANISCHFILTERN

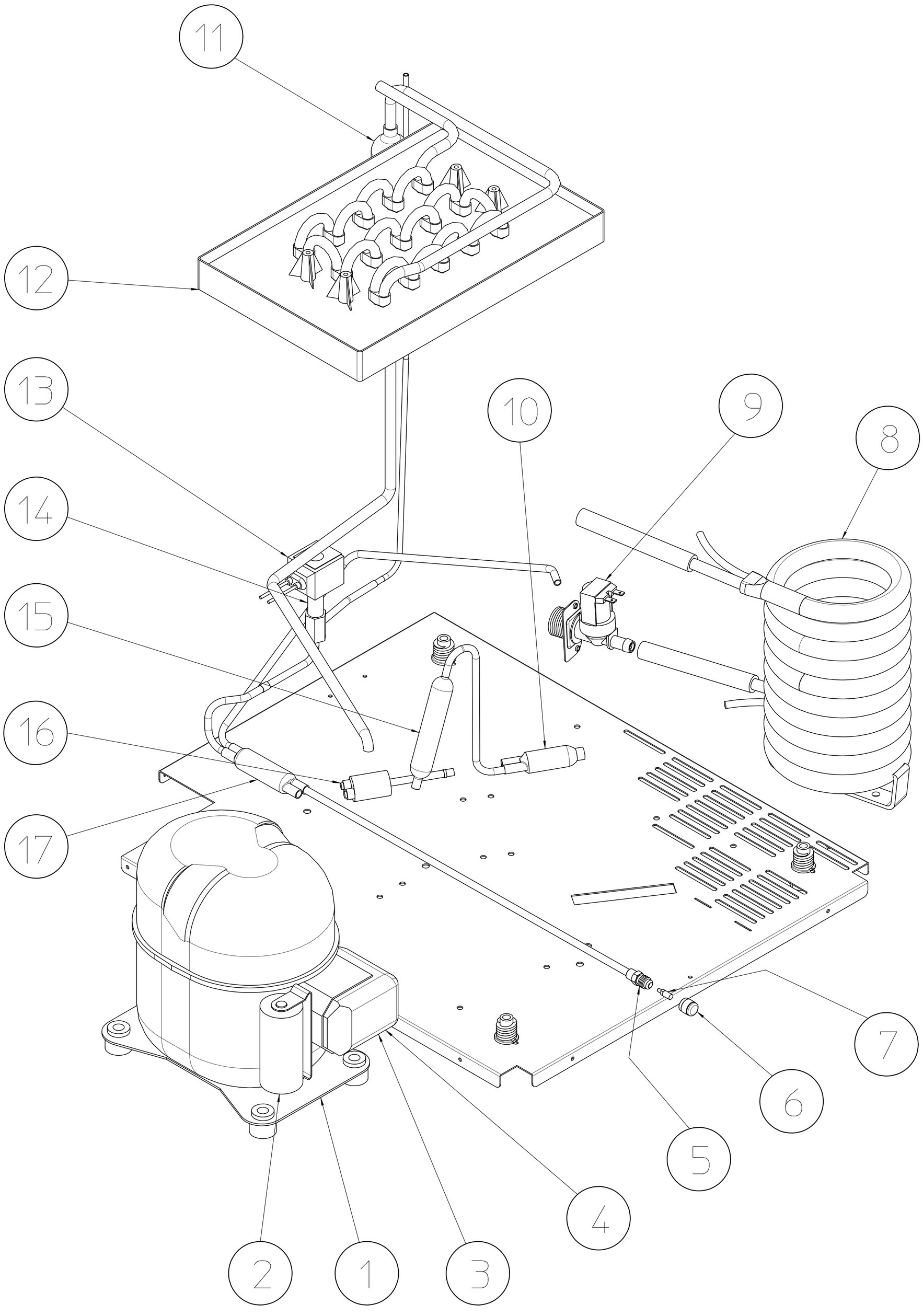
11
12
13
14
15
16
17
10
9
8
7
6
5
4
2
1
3

SCN 25 - REFRIGERANT SYSTEM WATER COOLED - SISTEMA REFRIGERANTE RAFFR. AD ACQUA
CIRCUIT FRIGORIFIQUE REFROID. PAR EAU - WASSERGEKÜHLT GEFRIERSYSTEM
up to/fino a/jusq'à/bis Serial Number MJ 28771

ITEM NO POS. NO REP. NO REF. NO	PART NO CODICE REFERENCE STUECK NR	DESCRIPTION	DESCRIZIONE	DESIGNATION	BESCHREIBUNG
1	670101 11	COMPRESSOR	COMPRESSORE	COMPRESSEUR	KOMPRESSOR
2	EMB 2252347	START CAPACITOR	CONDENSATORE D'AVVIAMENTO	CAPACITE DE DEMARRAGE	START CONDENSATOR
3	620478 11	PROTECTOR	PROTETTORE	PROTECTEUR	SCHUTZGERAT
4	620057 71	RELAY	RELE'	RELAIS	RELAIS
5	650109 00	VALVE BODY	CORPO VALVOLA	CORPS DE VANNE	VENTILGEHAUSE
6	670012 00	VALVE PISTON	PISTONCINO VALVOLA	PISTON	VENTILKOLBEN
7	650106 00	VALVE CAP	CAPPUCCIO VALVOLA	CAPUCHON DE VANNE	VENTILKLAPPE
8	620389 00	WATER COOLED CONDENSER	CONDENSATORE AD ACQUA	CONDENSEUR A EAU	WASSER KONDENSATOR
9	650105 70	WATER INLET VALVE	ELETTROVALVOLA	VANNE ARRIVÉE EAU	ELEKTROVENTIL
10	630020 01	MECHANICAL FILTER	FILTRO MECCANICO	FILTRE MECANIQUE	MECHANISCHFILTERN
11	784444 07	ACCUMULATOR ASSY	ASSIEME ACCUMULATORE	ENS. ACCUMULATEUR	SAMMLER UND SAUGLEITUNGEN
12	784605 00	EVAPORATOR	EVAPORATORE	EVAPORATEUR	VERDAMPFER
13	620306 48	HOT GAS VALVE COIL	BOBINA VALVOLA GAS CALDO	BOBINE VANNE GAZ CHAUD	HEISSGAZ VENTIL SPULE
14	620306 14	HOT GAS VALVE BODY	CORPO VALVOLA	CORPS DE VANNE	VENTILGEHAUSE
15	630003 05	DRIER	FILTRO DEUMIDIFICATORE	FILTRE DESHYDRATEUR	TROCKNER
16	620499 01	PRESSURE CONTROL	PRESSOSTATO	PRESSOSTAT	PRESSOSTAT
17	630137 00	MECHANICAL FILTER	FILTRO MECCANICO	FILTRE MECANIQUE	MECHANISCHFILTERN

SCN 25 - REFRIGERANT SYSTEM WATER COOLED - SISTEMA REFRIGERANTE RAFFR. AD ACQUA
CIRCUIT FRIGORIFIQUE REFROID. PAR EAU - WASSERGEKÜHLT GEFRIERSYSTEM
from/dal/a partir du/von Serial Number MJ 28772

ITEM NO POS. NO REP. NO REF. NO	PART NO CODICE REFERENCE STUECK NR	DESCRIPTION	DESCRIZIONE	DESIGNATION	BESCHREIBUNG
1	670097 08	COMPRESSOR	COMPRESSORE	COMPRESSEUR	KOMPRESSOR
2	620167 29	START CAPACITOR	CONDENSATORE D'AVVIAMENTO	CAPACITE DE DEMARRAGE	START CONDENSATOR
3	620058 65	PROTECTOR	PROTETTORE	PROTECTEUR	SCHUTZGERAT
4	620057 35	RELAY	RELE'	RELAIS	RELAIS
5	650109 00	VALVE BODY	CORPO VALVOLA	CORPS DE VANNE	VENTILGEHAUSE
6	670012 00	VALVE PISTON	PISTONCINO VALVOLA	PISTON	VENTILKOLBEN
7	650106 00	VALVE CAP	CAPPUCCIO VALVOLA	CAPUCHON DE VANNE	VENTILKLAPPE
8	620389 00	WATER COOLED CONDENSER	CONDENSATORE AD ACQUA	CONDENSEUR A EAU	WASSER KONDENSATOR
9	650105 70	WATER INLET VALVE	ELETTROVALVOLA	VANNE ARRIVÉE EAU	ELEKTROVENTIL
10	630020 01	MECHANICAL FILTER	FILTRO MECCANICO	FILTRE MECANIQUE	MECHANISCHFILTERN
11	784444 36	ACCUMULATOR ASSY	ASSIEME ACCUMULATORE	ENS. ACCUMULATEUR	SAMMLER UND SAUGLEITUNGEN
12	784605 00	EVAPORATOR	EVAPORATORE	EVAPORATEUR	VERDAMPFER
13	620306 48	HOT GAS VALVE COIL	BOBINA VALVOLA GAS CALDO	BOBINE VANNE GAZ CHAUD	HEISSGAZ VENTIL SPULE
14	620306 14	HOT GAS VALVE BODY	CORPO VALVOLA	CORPS DE VANNE	VENTILGEHAUSE
15	630003 05	DRIER	FILTRO DEUMIDIFICATORE	FILTRE DESHYDRATEUR	TROCKNER
16	620499 01	PRESSURE CONTROL	PRESSOSTATO	PRESSOSTAT	PRESSOSTAT
17	630137 00	MECHANICAL FILTER	FILTRO MECCANICO	FILTRE MECANIQUE	MECHANISCHFILTERN

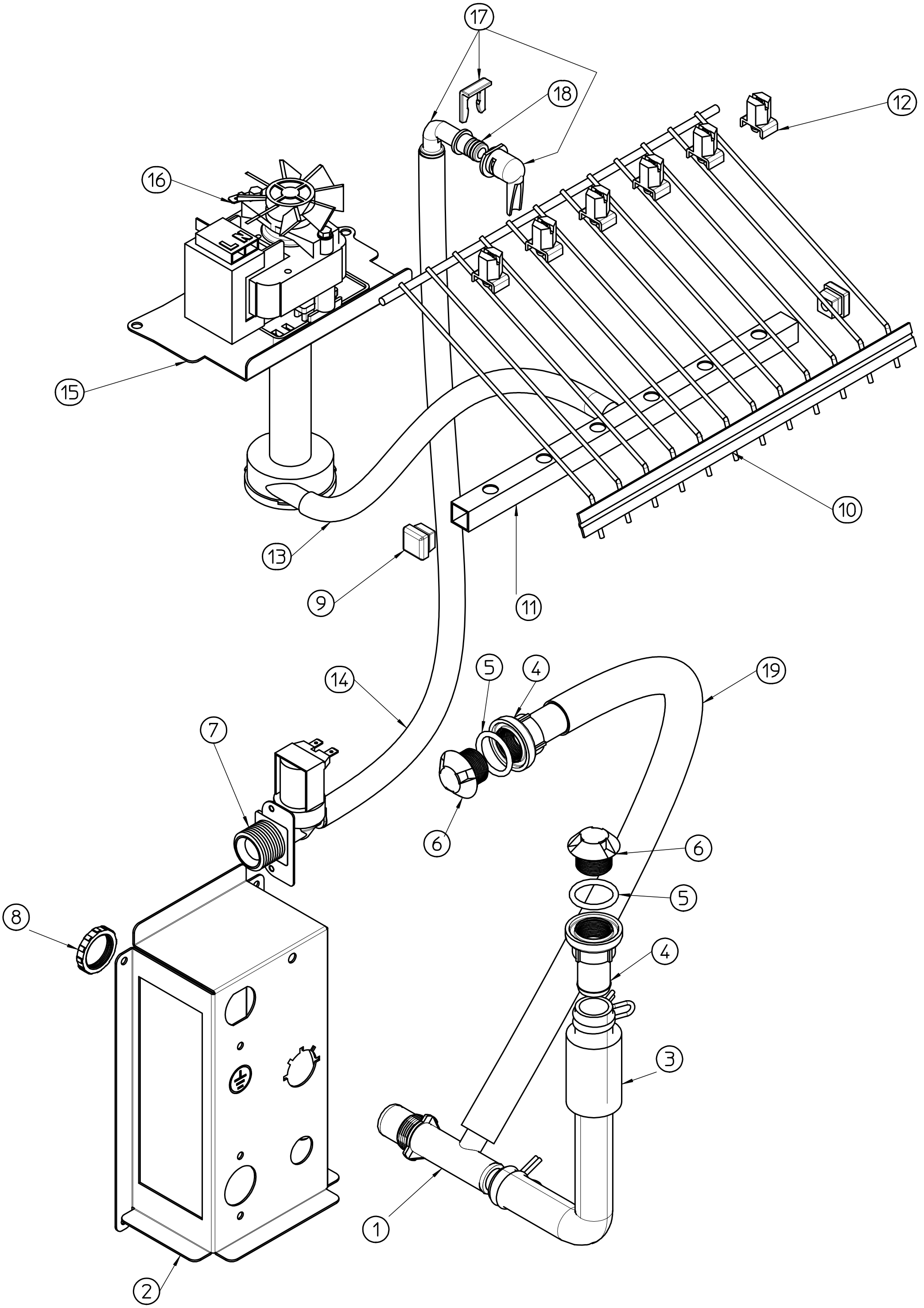
17
18
12
16
15
10
13
9
11
14
5
4
19
7
6
6
5
8
4
3
1
2

SCN 25 WATER SYSTEM - CIRCUITO IDRAULICO - CIRCUIT HYDRAULIQUE - WASSERSYSTEM

ITEM NO POS. NO REP. NO REF. NO	PART NO CODICE REFERENCE STUECK NR	DESCRIPTION	DESCRIZIONE	DESIGNATION	BESCHREIBUNG
1	660224 00	WATER DRAIN FITTING	RACCORDO A "T"	RACCORD EVACUATION EAU	WASSERABFLUSSANSCHLUSSE
2	702526 00	METAL BRACKET FOR FITTING	SUPPORTO ATTACCHI	SUPPORT DE RACCORDS	METALLTRÄGER
3	610148 09	STORAGE BIN DRAIN	TUBO SCARICO CONTENITORE	TUYAU VIDANGE CONTENEUR	BEHÄLTERAUSLAUFSCHLAUCH
4	660219 02	BIN DRAIN	RACCORDO DI SCARICO	RACCORD EVACUATION	ABFLUSSROHR
5	640134 00	O-RING	GUARNIZIONE	JOINT TORIQUE	SIMMER RING
6	660211 01	DRAIN FILTER	FILTRO SCARICO	FILTRE EVACUATION EAU	ABFLUSSFILTER
	650105 66	WATER INLET VALVE - AIR COOL.	ELETTROVALVOLA INGR. ACQUA	ELECTROV. ARR. EAU - REFR. AIR	WASSEREINLAUFVENTIL - LUFT
	650105 70	WATER INL. VAL. - WATER COOL.	ELETTROVALVOLA INGR. ACQUA	ELECTROV. ARR. EAU - REFR. EAU	WASSEREINLAUFVENTIL - WASSER
8	660535 00	PLASTIC RING NUT	GHIERA	COLLIER DE SERRAGE EN PLAST.	PLASTIKRING MUTTER
9	660557 00	SPRAY CUP	UGELLO SPRUZZATORE	BOUCHON POUR COLLECTEUR	STOPFEN
10	650852 00	ICE DEFLECTOR	GRIGLIA SCORRIMENTO CUBETTI	GRILLE GLISSEMENT GLAÇON	ABGLEITGRILL
11	650665 29	SPRAY BAR	TUBO SPRUZZATORE	COLLECTEUR	KOLLEKTOR
12	660558 00	SPRAY JET	SPRUZZATORI	GICLEURS	SPRÜHDÜSEN
13	610150 03	PUMP INLET WATER PIPE	TUBO MANDATA POMPA	TUYAU EVACUATION	ABFLUSSROHR
14	281900 01	PLASTIC TUBE - PER METER	TUBO INGRESSO ACQUA	TUYAU EN PLASTIQUE - POUR MT.	PLASTIK ROHR - PRO METER
15	724331 00	METAL BRACKET	SUPPORTO POMPA	SUPPORT METALLIQUE	METALTRAEGER
16	620433 00	WATER PUMP	POMPA	POMPE A EAU	WASSER PUMPE
17	793172 00R	WATER INLET ELBOW ASSY	ASS. INGR. ACQUA A GOMITO	ENS. ENTREE EAU COUDEE	ABGEWINKEL ZULAUFROHR
18	640041 31	O-RING	GUARNIZIONE	JOINT TORIQUE	SIMMER RING
19	610204 00	OVERFLOW DRAIN TUBE	TUBO SCARICO TROPPO PIENO	TUYAU VIDANGE TROP PLAIN	BEHÄLTER ABLAUF

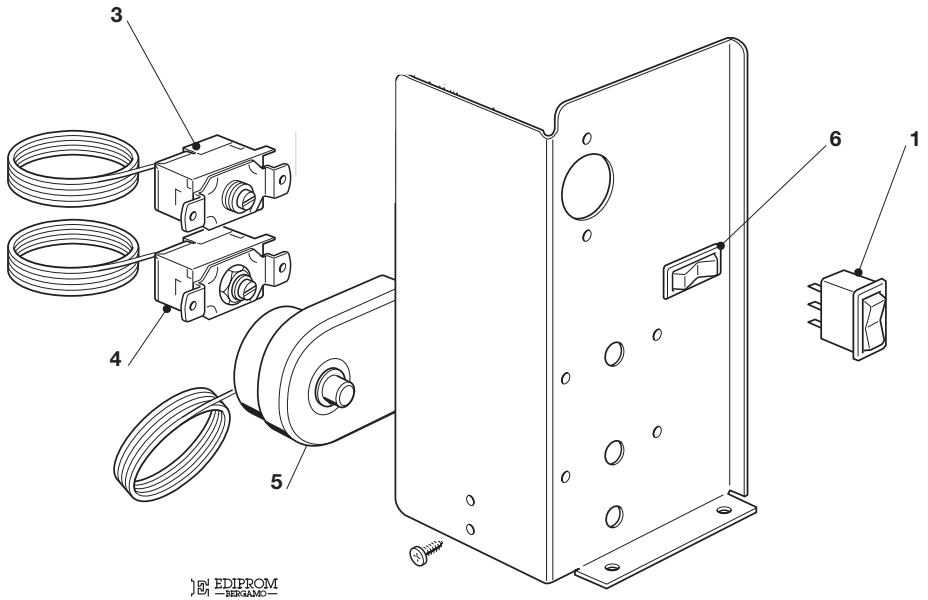

EDIPROM BERGAMO

0106.04

SCN 25 - CONTROL BOX - SCATOLA DI CONTROLLO - BOITE ELECTRIQUE - SCHALTSCHRANK

ITEM NO POS NO REP. NO REF. NO	PART NO CODICE REFERENCE STUECK NR	DESCRIPTION	DESCRIZIONE	DESIGNATION	BESCHREIBUNG
1	620453 00	SWITCH	INTERRUTTORE LUMINOSO	INTERRUPTEUR LUMINEUX	SCHALTER
3	620264 16	EVAPORATOR THERMOSTAT	TERMOSTATO EVAPORATORE	THERMOSTAT EVAPORATEUR	VERDAMPFERTHERMOSTAT
4	630005 00	BIN THERMOSTAT	TERMOSTATO CONTENITORE	THERMOSTAT CONTENEUR	BEHÄLTER THERMOSTAT
5	620443 00	THERMOSTAT - SAFETY	TERMOSTATO DI SICUREZZA	THERMOSTAT DE SECURITÉ	SICHERHEITS THERMOSTAT
6	620442 01	SWITCH	COMMUTATORE UNIPOLARE	INTERRUPTEUR	UMSCHALTER



Via Pascoli, 22 - 20010 Pogliano Milanese (Milano) Italy
Tel. +39 02 93900215 (Commerciale - Sales Dept.)
Tel. +39 02 93960357 (Assistenza - Service Dept.)
Fax +39 02 93900226 (Commerciale - Sales Dept.)
Fax +39 02 93960366 (Assistenza - Service Dept.)
E-mail: sales@simag.it • service@simag.it
www.simag.it