DESPIECE TECNICO

Sarten basculante a gas
Gas tilting Bratt Pan
Sauteuse basculante a gaz
Gas-kippbratpfannen
Brasiere a gas
Fritadeira baculante a gás

GAMA 900

Modelos:

SBG9-10 I AD
SBG9-10 I M AD
SBG9-15 I M AD

Noviembre 2011 November

FAGOR

FAGOR INDUSTRIAL

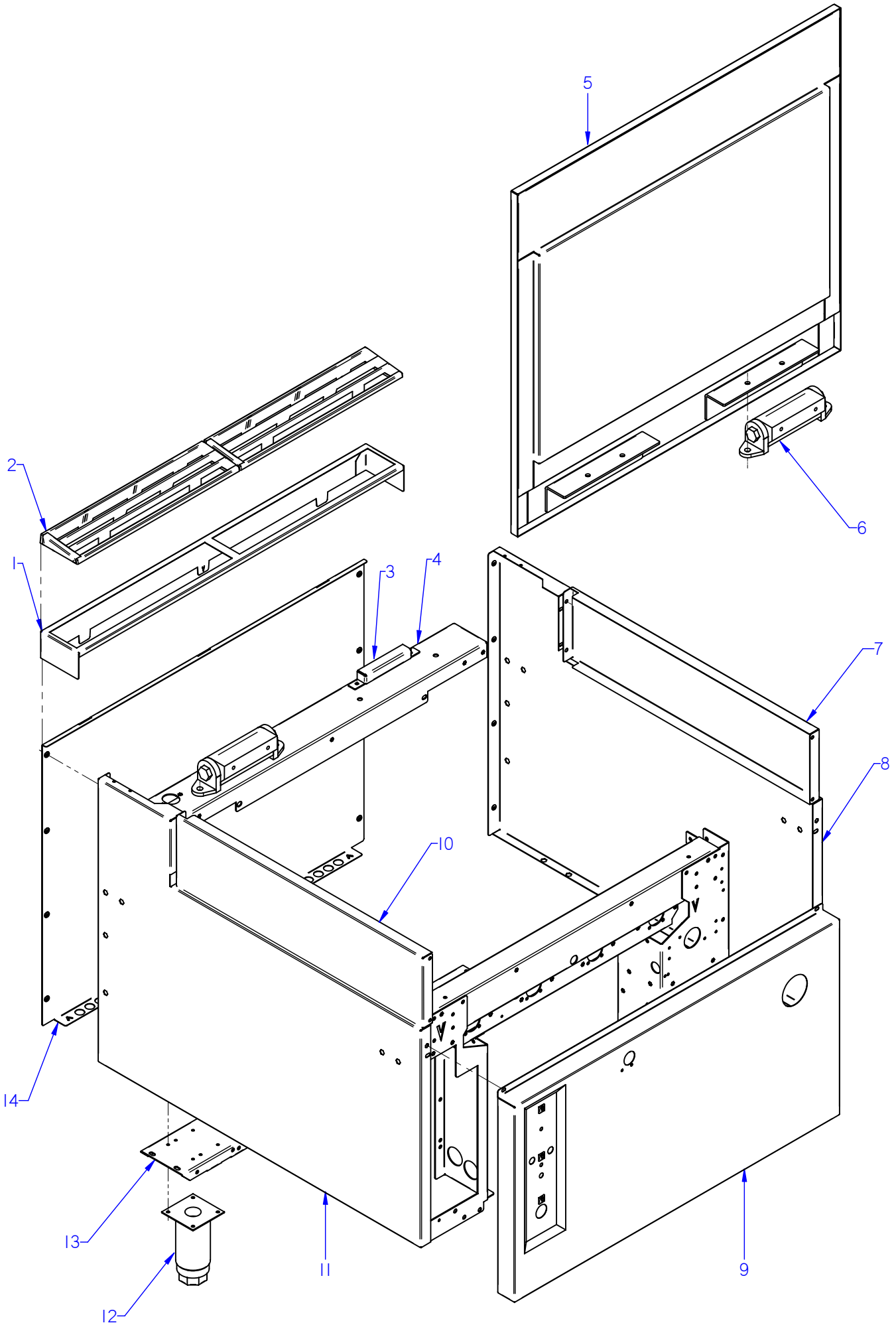

ITEM MARCADO EN COLOR = REPUESTO RECOMENDADO
COLOURED ITEM = RECOMMENDED SPARE PART

Nº plano / N º plane	Firma	Fecha / Date	Denominación / Denomination: MUEBLE / FITTING	Lamina / Sheet	
C-2920	Irene Berrpe	2011-11	SARTEN BASCUL. SBG9-10 / 15 I AD	1	Fagor Industrial S.Coop. FAGOR Oñate

MOD.	SARTEN BASCULANTE TILTING BRATT PANS	ZONA / ZONE	MUEBLE / FITTING	PLANO DIAGRAM	C-2920

ITEM	CODIGO REFERENCE	DENOMINACION	DENOMINATION	SBG9-10 I AD	SBG9-10 I AD S	SBG9-10 I M AD	SBG9-10 I M S AD	SBG9-15 I M AD	SBG9-15 I M AD S			ELIMINADO ELIMINATED	INTRODUCID. INTRODUCED	NOTAS
1	R205439000	SOPORTE EMBELLECEDOR 1M	TRIM SUPPORT 1M	1	1	1	1	_	_					
1	R205440000	SOPORTE EMBELLECEDOR 1,5M	1.5 M TRIM SUPPORT	_	_	_	_	1	1					
2	R205425000	EMBELLECEDOR ESMALTE	ENAMEL TRIM	2	2	2	2	3	3					
3	X082655000	TOPE TAPA SARTEN	PAN COVER TOP	2	2	2	2	2	2					
	Q012042000	TORNILLO EXAGONAL M6X15	HEXAGONAL BOLTM6X15	4	4	4	4	4	4					
	Q221342000	REMACHE EXAGONAL M5	HEXAGONAL RIVET M5	4	4	4	4	4	4					
	Q012031000	TORNILLO EXAGONAL M5X10	HEXAGONAL BOLT M5X10	4	4	4	4	4	4					
4	X020117000	CUBIERTA PUENTE 1M AD	BRIDGE COVERING 1M AD	1	1	1	1	_	_					
4	X080115000	CUBIERTA PUENTE 1.5M AD	BRIDGE COVERING 1.5M AD	_	_	_	_	1	1					
	Q411302000	REMACHE MONOBOLT Ø6.35	MONOBOLT RIVET D6.35	6	6	6	6	6	6					
	Q221342000	REMACHE EXAGONAL M5	HEXAGONAL RIVET M5	2	2	2	2	2	2					
5	X026121000	TAPA COMPLETA 1 M AD	LID COMPLETE 1 M AD	1	1	1	1	_	_					
5	X086127000	TAPA COMPLETA 1,5 M AD	LID COMPLETE 1,5 M AD	_	_	_	_	1	1					
S/Nº	S266124000	ASA G900 AD	HANDLE G900 AD	1	1	1	1	1	1					
S/Nº	S262678000	CASQUILLO AMARRE TAPA	MOORING COVER CAP	2	2	2	2	2	2					
	Q012051000	TORNILLO EXAGONAL M8x10	HEXAGONAL BOLT M8x10	2	2	2	2	2	2					
6	X026123000	BISAGRA ADVANCE	HINGE ADVANCE	2	2	2	2	2	2					
	Q012053000	TORNILLO EXAGONAL M8x20	HEXAGONAL BOLT M8x20	4	4	4	4	4	4					
	Q262050000	ARANDELA GROW. A8 A304	WASHER GROW. A8 A304	4	4	4	4	4	4					
	Q232050000	ARANDELA A8	WASHER A8	4	4	4	4	4	4					
	Q162050000	TUERCA EXAGONAL M8X1 DIN 934	HEXAGONAL NUT M8X1 DIN 934	4	4	4	4	4	4					
7	X082822000	LATERAL CUBA ADVANCE	PAN ADVANCE SIDE	1	1	1	1	1	1					
8	X082819000	PANEL LATERAL DERECHO AD	RIGHT SIDE PANEL AD	1	_	1	_	1	_					
8	X242825000	PANEL LATERAL DERECHO S AD	RIGHT SIDE PANEL S AD	_	1	_	1	_	1					
	Q221343000	REMACHE EXAGONAL M6	HEXAGONAL RIVET M6	11	_	11	_	11	_					
	Q012042000	TORNILLO EXAGONAL M6x15	HEXAGONAL BOLT M6x15	4	_	4	_	4	_					
	Q262040000	ARANDELA GROW. A6 A304	WASHER GROW. A6 A304	4	_	4	_	4	_					
	Q221342000	REMACHE EXAGONAL M5	HEXAGONAL RIVET M5	3	3	3	3	3	3					
	Q152004000	TORNILLO APLASTADO M5x13	FLAT HEAD SCREW M5X13	1	1	1	1	1	1					
	Q162030000	TUERCA EXAGONAL M5	HEXAGONAL NUT M5	_	_	_	1	_	1					

MOD.	SARTEN BASCULANTE TILTING BRATT PANS	ZONA / ZONE	MUEBLE / FITTING	PLANO DIAGRAM	C-2920

ITEM	CODIGO REFERENCE	DENOMINACION	DENOMINATION	SBG9-10 I AD	SBG9-10 I AD S	SBG9-10 I M AD	SBG9-10 I M S AD	SBG9-15 I M AD	SBG9-15 I M AD S			ELIMINADO ELIMINATED	INTRODUCID. INTRODUCED	NOTAS
9	X022835000	PANEL FRONTAL SBG9-10 AD	FRONT PANEL SBG9-10 AD	1	1	_	_	_	_					
9	X342806000	PANEL FRONTAL SBG9-10 M AD	FRONT PANEL SBG9-10 M AD	_	_	1	1	_	_					MOTORIZADA
9	X082817000	PANEL FRONTAL SBG9-15 AD	FRONT PANEL SBG9-15 AD	_	_	_	_	1	1					
	Q152004000	TORNILLO APLASTADO M5X13	FLAT HEAD SCREW M5X13	2	2	2	2	2	2					
	Q012042000	TORNILLO EXAGONAL M6x15	HEXAGONAL BOLT M6x15	2	2	2	2	2	2					
	Q262040000	ARANDELA GROW. A6 A304	WASHER GROW. A6 A304	2	2	2	2	2	2					
10	X082822000	LATERAL CUBA ADVANCE	PAN ADVANCE SIDE	1	1	1	1	1	1					
11	X082818000	PANEL LATERAL IZQUIERDO AD	LEFT SIDE PANEL AD	1	_	1	_	1	_					
11	X242824000	PANEL LATERAL IZQUIERDO S AD	LEFT SIDE PANEL S AD	_	1	_	1	_	1					
	Q221343000	REMACHE EXAGONAL M6	HEXAGONAL RIVET M6	11	_	11	_	11	_					
	Q012042000	TORNILLO EXAGONAL M6x15	HEXAGONAL BOLT M6x15	4	_	4	_	4	_					
	Q262040000	ARANDELA GROW. A6 A304	WASHER GROW. A6 A304	4	_	4	_	4	_					
	Q221342000	REMACHE EXAGONAL M5	HEXAGONAL RIVET M5	3	3	3	3	3	3					
	Q152004000	TORNILLO APLASTADO M5x13	FLAT HEAD SCREW M5X13	1	1	1	1	1	1					
	Q162030000	TUERCA EXAGONAL M5	HEXAGONAL NUT M5	_	_	_	1	_	1					
12	X260151000	PATA REGULABLE	ADJUSTABLE LEG	4	_	4	_	4	_					
	Q411304000	REMACHE AVIBULB Ø 4,8	AVIBULB RIVET Ø 4.8	16	_	16	_	16	_					
13	X022616000	LISTON SOPORTE PATAS 1M AD	LEG SUPPORT STRIP 1M AD	2	1	2	1	_	_					
13	X240129000	LISTON SOPORTE POST. 1M AD	REAR SUPPORT STRIP 1M AD	_	1	_	1	_	_					
13	X080107000	LISTON SOPORTE PATAS 1,5M AD	LEG SUPPORT STRIP 1.5 M AD	_	_	_	_	2	1					
13	X240138000	LISTON SOPORTE POST. 1,5M AD	REAR SUPPORT STRIP 1,5M AD	_	_	_	_	_	1					
	Q221342000	REMACHE EXAGONAL M5	HEXAGONAL RIVET M5	4	_	4	_	4	_					
	Q221343000	REMACHE EXAGONAL M6	HEXAGONAL RIVET M6	2	_	2	_	2	_					
14	X022841000	PANEL POSTERIOR 1M AD	REAR PANEL 1M AD	1	_	1	_	_	_					
14	S262804000	PANEL POSTERIOR 1M S AD	REAR PANEL 1M S AD	_	1	_	1	_	_					
14	U962801000	PANEL POSTERIOR 1,5 M AD	REAR PANEL 1.5 M AD	_	_	_	_	1	_					
14	X412803000	PANEL POSTERIOR 1,5 M S AD	REAR PANEL 1,5 M S AD	_	_	_	_	_	1					
	Q419005000	REMACHE 4x8 ALMG3 / ALUMINIO	RIVET 4X8 ALMG3 / ALUMINIUM	8	8	8	8	8	8					

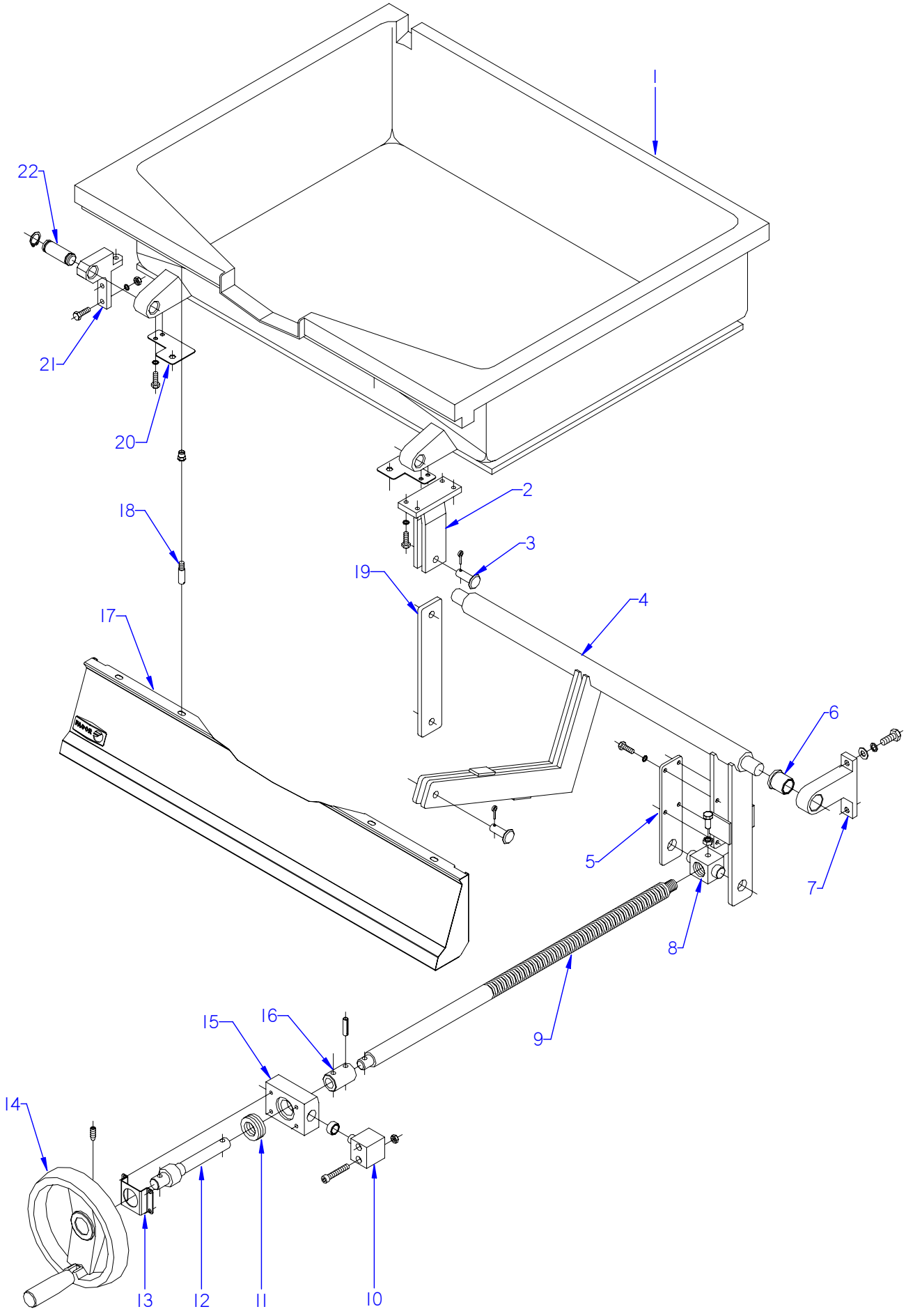

ITEM MARCADO EN COLOR = REPUESTO RECOMENDADO
COLOURED ITEM = RECOMMENDED SPARE PART

Nº plano / N º plane	Firma	Fecha / Date	Denominación / Denomination: CUBA / PAN	Lamina / Sheet	
C-2921	Irene Berrpe	2011-11	SARTEN BASCUL. SBG9-10 I AD	2	Fagor Industrial S.Coop. FAGOR Oñate

MOD.	SARTEN BASCULANTE TILTING BRATT PANS	ZONA / ZONE	CUBA / PAN	PLANO DIAGRAM	C-2921

ITEM	CODIGO REFERENCE	DENOMINACION	DENOMINATION	SBG9-10 I AD								ELIMINADO ELIMINATED	INTRODUCID. INTRODUCED	NOTAS
1	X026117000	CUBA INOXIDABLE SARTEN 910 AD	INOX TUB FRYPAN 910 AD	1										
	Q151336000	TORNILLO SOPORTE GUIAS	SCREW SUPPORT GUIDELINES	2										
	Q221342000	REMACHE EXAGONAL M5	HEXAGONAL RIVET M5	4										
2	X156163000	BRAZO DE GIRO	ROTATION ARM	1										
	Q012043000	TORNILLO EXAGONAL M6x20 A304	HEXAGONAL BOLT M6x20 A304	4										
	Q262040000	ARANDELA GROW. A6 A304	WASHER GROW. A6 A304	4										
3	X156123000	BULON Ø12	PIN Ø12	2										
	Q352024000	PASADOR DE ALETAS Ø4x25	COTTER PIN Ø4x25	2										
4	X156148000	BRAZO ELEVADOR COMPLETO	COMPLETE ELEVATION ARM	1										
5	X156149000	BRAZO LATERAL	SIDE ARM	1										
	Q012042000	TORNILLO EXAGONAL M6x15	HEXAGONAL BOLT M6x15	4										
	Q262040000	ARANDELA GROW. A6 A304	WASHER GROW. A6 A304	4										
6	X109550000	COJINETE SELFOIL B11	BEARING SELFOIL B11	2										
7	X150108000	SOPORTE DE GIRO	ROTATION SUPPORT	2										
	Q012063000	TORNILLO EXAG. M10x20 A304	HEX BOLT M10x20 A304	4										
	Q261060000	ARANDELA MUELLE A10	SPRING WASHER A10	4										
	Q232060000	ARANDELA A10	WASHER A10	4										
8	X146136000	TUERCA HUSILLO	SPINDLE NUT	1										
	Q011364000	TORNILLO EXAG. M10x25	HEX BOLT M10x25	1										
	Q161360000	TUERCA EXAG. M10 H. ZINCADA	HEXAG. SCREW M10 H. ZINC-CO	1										
9	X146134000	HUSILLO GAMA 900	SPINDLE RANGE 900	1										
10	X156113000	PIVOTE DE GIRO	ROTATION PIVOT	2										
	S116126000	COJINETE CILINDRICO	CYLINDRICAL BEARING	2										
	Q052046000	TORNILLO ALLEN M6x40 A304	ALLEN BOLT M6x40 A304	4										
	Q162040000	TUERCA EXAGONAL M6	HEXAGONAL NUT M6	4										
11	X156125000	RODAMIENTO 51204	BEARING 51204	1										
12	X156161000	EJE VOLANTE COMPLETO	COMPLETE FLYSHAFT	1										
13	X152619000	SOPORTE EJE VOLANTE	FLYSHAFT SUPPORT	1										
	Q012041000	TORNILLO EXAGONAL M6x10 A304	HEXAGONAL BOLT M6x10 A304	4										
	Q262040000	ARANDELA GROW. A6 A304	WASHER GROW. A6 A304	4										

MOD.	SARTEN BASCULANTE TILTING BRATT PANS	ZONA / ZONE	CUBA / PAN	PLANO DIAGRAM	C-2921

ITEM	CODIGO REFERENCE	DENOMINACION	DENOMINATION	SBG9-10 I AD								ELIMINADO ELIMINATED	INTRODUCID. INTRODUCED	NOTAS
14	X156139000	VOLANTE ELESA	FLYSHAFT ELESA	1										
	Q131552000	VARILLA ROSCADA M8x15	THREADED ROD M8X15	2										
15	X156114000	SOPORTE RODAMIENTO	BEARING SUPPORT	1										
16	X156115000	CASQUILLO	BUSHING	1										
	Q371027000	MANGUITO DE SUJECCION Ø8x30	FASTENING SLEEVE Ø8x30	2										
17	X022845000	PORTAMANDOS SARTEN 1M AD	FRYPAN CONTROL HOLDER 1M	1										
	U022836000	ESCUDO FAGOR	FAGOR EMBLEM	1										
	Q301304000	ARANDELA PLANA 23x6,5x2	FLAT WASHER 23X6.5X2	2										
	Q012042000	TORNILLO EXAGONAL M6x15	HEXAGONAL BOLT M6x15	2										
	Q221023000	CLIP SUJECIÓN RÁPIDA D-5	QUICK FASTENING CLIP D-5	2										
18	Q151336000	TORNILLO SOPORTE GUIAS	GUIDE SUPPORT BOLT	2										
19	X156151000	BRAZO	ARM	1										
20	X156156000	AMARRE PANEL PORTAMANDOS	CONTROL HOLDER PANEL FAST.	2										
	Q012041000	TORNILLO EXAGONAL M6x10 A304	HEXAGONAL BOLT M6x10 A304	4										
	Q262040000	ARANDELA GROW. A6 A304	WASHER GROW. A6 A304	4										
21	X156145000	SOPORTE GIRO CUBA	TUB ROTATION SUPPORT	2										
	Q012043000	TORNILLO EXAGONAL M6x20 A304	HEXAGONAL BOLT M6x20 A304	6										
	Q262040000	ARANDELA GROW. A6 A304	WASHER GROW. A6 A304	6										
	Q162040000	TUERCA EXAGONAL M6	HEXAGONAL NUT M6	6										
22	X109511000	BULON LATON	BRASS BOLT	2										
	Q301020000	ANILLO DE SEGURIDAD 20x1,2	CIRCLIP 20x1.2	4										

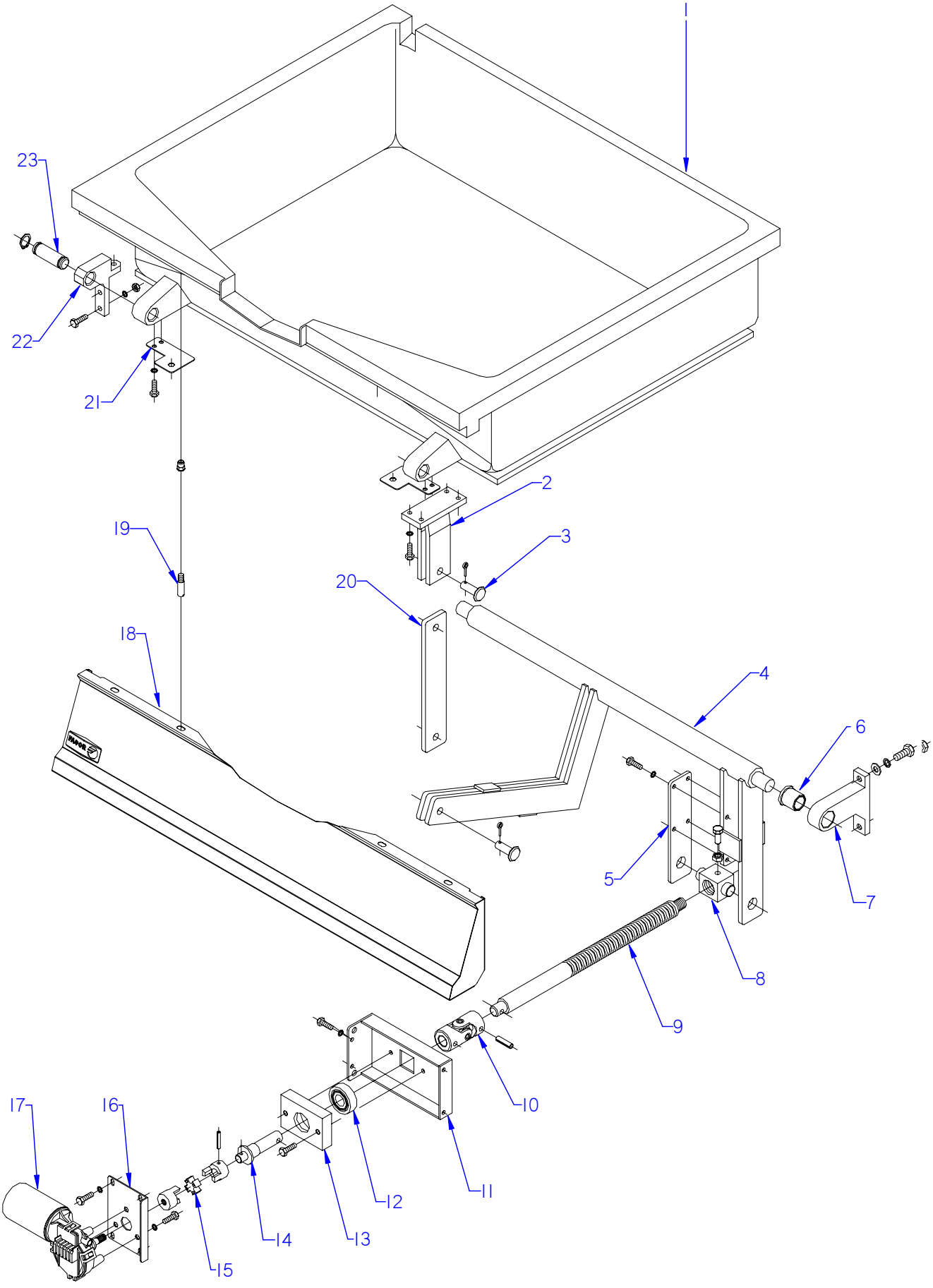

ITEM MARCADO EN COLOR = REPUESTO RECOMENDADO
COLOURED ITEM = RECOMMENDED SPARE PART

Nº plano / N º plane	Firma	Fecha / Date	Denominación / Denomination: CUBA / PAN	Lamina / Sheet	
C-2922		2011-11	SARTEN BASC. SBG9-10/ 15 IM AD	3	Fagor Industrial S.Coop. FAGOR Oñate

MOD.	SARTEN BASCULANTE TILTING BRATT PANS	ZONA / ZONE	CUBA / PAN	PLANO DIAGRAM	C-2922

ITEM	CODIGO REFERENCE	DENOMINACION	DENOMINATION	SBG9-10 I M AD	SBG9-15 I M AD							ELIMINADO ELIMINATED	INTRODUCID. INTRODUCED	NOTAS
1	X026117000	CUBA INOXIDABLE SARTEN 910 AD	INOX TUB FRYPAN 910 AD	1	_									
1	X086109000	CUBA INOXIDABLE SARTEN 915 AD	INOX TUB FRYPAN 915 AD	_	1									
	Q151336000	TORNILLO SOPORTE GUIAS	SCREW SUPPORT GUIDELINES	2	2									
	Q221342000	REMACHE EXAGONAL M5	HEXAGONAL RIVET M5	4	4									
2	X156163000	BRAZO DE GIRO	ROTATION ARM	1	1									
	Q012043000	TORNILLO EXAGONAL M6x20 A304	HEXAGONAL BOLT M6x20 A304	4	4									
	Q262040000	ARANDELA GROW. A6 A304	WASHER GROW. A6 A304	4	4									
3	X156123000	BULON Ø12	PIN Ø12	2	2									
	Q352024000	PASADOR DE ALETAS Ø4x25	COTTER PIN Ø4x25	2	2									
4	X156148000	BRAZO ELEVADOR COM. SB9-10	COM. ELEVATION ARM SB9-10	1	_									
4	X426103000	BRAZO ELEVADOR COM. SBE9-15	COM. ELEVATION ARM SBE9-15	_	1									
5	X156149000	BRAZO LATERAL	SIDE ARM	1	1									
	Q012042000	TORNILLO EXAGONAL M6x15	HEXAGONAL BOLT M6x15	4	4									
	Q262040000	ARANDELA GROW. A6 A304	WASHER GROW. A6 A304	4	4									
6	X109550000	COJINETE SELFOIL B11	BEARING SELFOIL B11	2	2									
7	X150108000	SOPORTE DE GIRO	ROTATION SUPPORT	2	2									
	Q012063000	TORNILLO EXAG. M10x20 A304	HEX BOLT M10x20 A304	4	4									
	Q261060000	ARANDELA MUELLE A10	SPRING WASHER A10	4	4									
	Q232060000	ARANDELA A10	WASHER A10	4	4									
8	X146136000	TUERCA HUSILLO	SPINDLE NUT	1	1									
	Q011364000	TORNILLO EXAG. M10x25	HEX BOLT M10x25	1	1									
	Q161360000	TUERCA EXAG. M10 H. ZINCADA	HEXAG. SCREW M10 H. ZINC-CO	1	1									
9	X146134000	HUSILLO GAMA 900	SPINDLE RANGE 900	1	1									
10	X126114000	JUNTA UNIVERSAL 107A	UNIVERSAL JOINT 107A	1	1									
	Q371027000	MANGUITO DE SUJECCION Ø8x30	FASTENING SLEEVE Ø8x30	2	2									
11	X082643000	SOPORTE EJE MOTOR AD	MOTOR SHAFT SUPPORT AD	1	1									
	Q012032000	TORNILLO EXAGONAL M5x15 A304	HEXAGONAL BOLT M5x15 A304	4	4									
	Q262030000	ARANDELA GROW. A5 A304	WASHER GROW. A5 A304	4	4									
12	X346109000	RODAMIENTO SKF	SKF BEARING	1	1									
13	X346105000	SOPORTE RODAMIENTO	BEARING SUPPORT	1	1									
	Q012044000	TORNILLO EXAGONAL M6x25	HEXAGONAL BOLT M6x25	2	2									

MOD.	SARTEN BASCULANTE TILTING BRATT PANS	ZONA / ZONE	CUBA / PAN	PLANO DIAGRAM	C-2922

ITEM	CODIGO REFERENCE	DENOMINACION	DENOMINATION	SBG9-10 I M AD	SBG9-15 I M AD							ELIMINADO ELIMINATED	INTRODUCID. INTRODUCED	NOTAS
14	X346106000	EJE MOTOR	MOTOR SHAFT	1	1									
15	X346107000	ACOPLAMIE. ELASTICO LOVEJOY	ELASTIC LOVEJOY COUPLING	1	1									
	Q371032000	PASADOR ELASTICO Ø5x30	ELASTIC PIN Ø5x30	2	2									
16	X082641000	SOPORTE MOTOR AD	MOTOR SUPPORT AD	1	1									
	Q012042000	TORNILLO EXAGONAL M6x15	HEXAGONAL BOLT M6x15	4	4									
	Q262040000	ARANDELA GROW. A6 A304	WASHER GROW. A6 A304	4	4									
17	X343020000	MOTORREDUCTOR (BOSCH)	GEAR MOTOR (BOSCH)	1	1									
	Q012042000	TORNILLO EXAGONAL M6x15	HEXAGONAL BOLT M6x15	3	3									
	Q262040000	ARANDELA GROW. A6 A304	WASHER GROW. A6 A304	3	3									
18	X022845000	PORTAMANDOS SBG9-10 I M AD	CONTROL HOLDER SBG9-10 I M	1	_									
18	X082830000	PORTAMANDOS SB9-15 I AD	CONTROL HOLDER SB9-15 I AD	_	1									
	U022836000	ESCUDO FAGOR	FAGOR EMBLEM	1	1									
	Q301304000	ARANDELA PLANA 23x6,5x2	FLAT WASHER 23X6.5X2	2	2									
	Q012042000	TORNILLO EXAGONAL M6x15	HEXAGONAL BOLT M6x15	2	2									
	Q221023000	CLIP SUJECIÓN RÁPIDA D-5	QUICK FASTENING CLIP D-5	2	2									
19	Q151336000	TORNILLO SOPORTE GUIAS	GUIDE SUPPORT BOLT	2	2									
20	X156151000	BRAZO	ARM	1	1									
21	X156156000	AMARRE PANEL PORTAMANDOS	CONTROL HOLDER PANEL FAST.	2	2									
	Q012041000	TORNILLO EXAGONAL M6x10 A304	HEXAGONAL BOLT M6x10 A304	4	4									
	Q262040000	ARANDELA GROW. A6 A304	WASHER GROW. A6 A304	4	4									
22	X156145000	SOPORTE GIRO CUBA	TUB ROTATION SUPPORT	2	2									
	Q012043000	TORNILLO EXAGONAL M6x20 A304	HEXAGONAL BOLT M6x20 A304	6	6									
	Q262040000	ARANDELA GROW. A6 A304	WASHER GROW. A6 A304	6	6									
	Q162040000	TUERCA EXAGONAL M6	HEXAGONAL NUT M6	6	6									
23	X109511000	BULON LATON	BRASS BOLT	2	2									
	Q301020000	ANILLO DE SEGURIDAD 20x1,2	CIRCLIP 20x1.2	4	4									
	Q012032000	TORNILLO EXAGONAL M5x15	HEXAGONAL BOLT M5x15	1	1									
	Q012033000	TORNILLO EXAGONAL M5x20	HEXAGONAL BOLT M5x20	1	1									

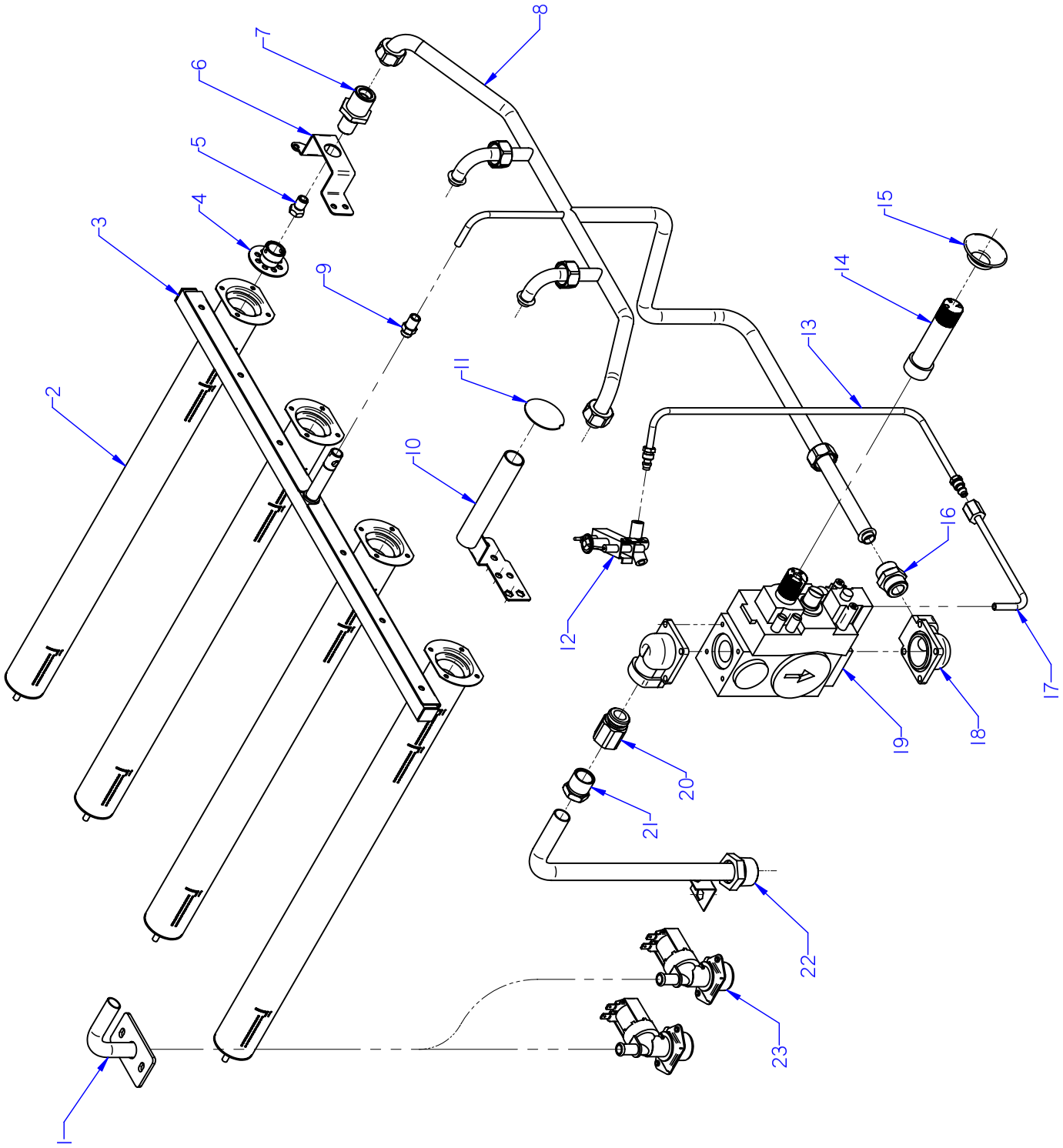

ITEM MARCADO EN COLOR = REPUESTO RECOMENDADO
COLOURED ITEM = RECOMMENDED SPARE PART

Nº plano / N º plane	Firma	Fecha / Date	Denominación / Denomination: PARTE FUNCIONAL GAS / GASFUNCTIONAL PART	Lamina / Sheet	
C-2923		2011-11	SARTEN BASCUL. SBG9-10 / 15 I AD	4	Fagor Industrial S.Coop. FAGOR Oñate

MOD.	SARTEN BASCULANTE TILTING BRATT PANS	ZONA / ZONE	PARTE FUNCIONAL GAS / GAS FUNCTIONAL PART	PLANO DIAGRAM	C-2923

ITEM	CODIGO REFERENCE	DENOMINACION	DENOMINATION	SBG9-10 I AD	SBG9-10 I AD S	SBG9-10 I M AD	SBG9-10 I M S AD	SBG9-15 I M AD	SBG9-15 I M AD S			ELIMINADO ELIMINATED	INTRODUCID. INTRODUCED	NOTAS
1	X466119000	CONJUNTO TUBO LLENADO CR	FILLER PIPE ASSEMBLY CR	1	1	1	1	1	1					
	Q152004000	TORN. APLASTADO M5x13 A304	HEXAGONAL FLAT SCREW M5x13	2	2	2	2	2	2					
S/Nº	3676900000	TUBO GOMA NEGRA Ø 17*10	BLACK RUBBER PIPE 17*10	2	2	2	2	2	2					
	Q881308000	ABRAZADERA 8-14L	CLAMP 8-14L	2	2	2	2	2	2					
S/Nº	Z201106000	RACORD EN Y	Y-CONNECTION	4	4	4	4	4	4					
2	X285717000	QUEMADOR SARTEN AD	PAN AD BURNER	4	4	4	4	6	6					
	Q419005000	REMACHE 4x8 ALMG3 / ALUMINIO	RIVET 4X8 ALMG3 / ALUMINIUM	8	8	8	8	12	12					
3	X025706000	QUEMADOR INTERENCENDIDO	INTERENCENDIDO BURNER	1	1	1	1	_	_					
3	X085709000	QUEMAD. INTERENCENDIDO 915	INTERENCENDIDO BURNER 915	_	_	_	_	1	1					
4	X505013000	REGULADOR DE AIRE POLIDORO	POLIDORO AIR CONTROL	4	4	4	4	6	6					
	Q012031000	TORNILLO EXAGONAL M5x10 A304	HEXAGONAL BOLT M5x10 A304	4	4	4	4	6	6					
5	R612400000	TOBERA Ø 1,35 (BUT-PROP.)	NOZZLE Ø1,35 (BUT-PROP.)	4	_	_	_	6	6					
5	U122407000	TOBERA Ø 1,05 (BUT-PROP.)	NOZZLE Ø1,05 (BUT-PROP.)	_	4	4	4	_	_					
5	R614500000	TOBERA Ø 2 (GAS NATURAL)	NOZZLE Ø2 (NATURAL GAS)	4	_	_	_	6	6					
5	R612400000	TOBERA Ø 1,35 (GAS NATURAL)	NOZZLE Ø1,35 (NATURAL GAS)	_	4	4	4	_	_					
6	X085706000	ESCUA. AMARRE PORTATOBERA	NOZZLE-HOLDER CLA. BRACKET	4	4	4	4	6	6					
	Q012031000	TORNILLO EXAGONAL M5x10 A304	HEXAGONAL BOLT M5x10 A304	8	8	8	8	12	12					
7	X505724000	MANGUITO PORTATOBERA	NOZZLE-HOLDER HOSE	4	4	4	4	6	6					
8	X025013000	CONDUCC. QUEMADOR 1 M AD	BURNER PIPE 1 M AD	1	1	1	1	_	_					
8	X085009000	CONDUC.QUEMADOR 1,5 M AD	BURNER PIPE 1,5 M AD	_	_	_	_	1	1					
	U105013000	TUERCA M10x1(024 0003.00)POL	NUT M10x1(024 0003.00)POL	2	2	2	2	3	3					
9	X082401000	TOBERA POLIDORO Ø 0,5 B-P	POLIDORO NOZZLE Ø 0,5 B-P	1	1	1	1	3	3					
9	U102402000	TOBERA POLIDORO Ø 0,7 G-N	POLIDORO NOZZLE Ø 0,7 G-N	1	1	1	1	3	3					
10	X085704000	TUBO DE ENCENDIDO AD	IGNITION PIPE AD	1	1	1	1	1	1					
11	X082831000	TAPA TUBO ENCENDIDO COMPL.	IGNITION PIPE COVER	1	1	1	1	1	1					
12	U322118000	PILOTO COMPLETO 100.062	COMPLETE PILOT LIGHT 100,062	1	1	1	1	1	1					
	U442137000	INYECTOR Ø 0,40 GN	INJECTOR Ø 0.40 GN.	1	1	1	1	1	1					
	X022131000	BUJIA	SPARK PLUG	1	1	1	1	1	1					
	U562130000	TERMOPAR L=850	THERMOCOUPLE L=850	1	1	1	1	1	1					

MOD.	SARTEN BASCULANTE TILTING BRATT PANS	ZONA / ZONE	PARTE FUNCIONAL GAS / GAS FUNCTIONAL PART	PLANO DIAGRAM	C-2923

ITEM	CODIGO REFERENCE	DENOMINACION	DENOMINATION	SBG9-10 I AD	SBG9-10 I AD S	SBG9-10 I M AD	SBG9-10 I M S AD	SBG9-15 I M AD	SBG9-15 I M AD S			ELIMINADO ELIMINATED	INTRODUCID. INTRODUCED	NOTAS
13	X025015000	TUBO PILOTO SBG9-10 AD	PILOT PIPE SBG9-10 AD	1	1	1	1	_	_					
13	X085013000	TUBO PILOTO SBG9-15 AD	PILOT PIPE SBG9-15 AD	_	_	_	_	1	1					
	U195009000	MANGUITO EMPALME	CONNECTION HOSE	1	1	1	1	1	1					
	X205028000	BICONO Ø6	BICONE Ø6	1	1	1	1	1	1					
14	X262100000	ALARGADERO NEG. 999.975	BLACK EXTENSION 999.975	1	1	1	1	1	1					
15	X152121000	JUNTA VALVULA	VALVE GASKET	1	1	1	1	1	1					
16	S205023000	MANGUITO DOBLE 1/2	DOUBLE SLEEVE 1/2	1	1	1	1	1	1					
17	X155043000	TUBO PILOTO A VALVULA COMPL.	PILOT PIPE TO COMPLETE VALVI	1	1	1	1	1	1					
18	X153004000	CODO 1-2 820 NOV 906.260	L-PIPE 1-2 820 NOV 906.260	2	2	2	2	2	2					
19	X163000000	ELECTROVALV. 820 NOVA 820.018	SOLENOID VALVE. 820 NOVA 820	1	1	1	1	1	1					
	Q012031000	TORNILLO EXAGONAL M5x10 A304	HEXAGONAL BOLT M5x10 A304	2	2	2	2	2	2					
20	X162101000	RACORD 1/2	CONNECTION 1/2	1	1	1	1	1	1					
21	X012104000	MANGUITO 1/2 958.027	HOSE 1/2 958.027	1	1	1	1	1	1					
	X012105000	BICONO Ø 16 957.008	BICONE Ø 16,957.008	1	1	1	1	1	1					
22	X155033000	CONDUCCION ENTRADA COMPL.	COMPL. INPUT PIPE	1	_	1	_	1	_					
22	X245019000	CONDUCCION GENERAL	GENERAL PIPE	_	1	_	1	_	1					
	Q221343000	REMACHE EXAGONAL M6	HEXAGONAL RIVET M6	1	1	1	1	1	1					
	Q012042000	TORNILLO EXAGONAL M6x15	HEXAGONAL BOLT M6x15	1	1	1	1	1	1					
	Q302022000	ARANDELA 16x6x1,2 A304	WASHER 16x6x1.2 A304	1	1	1	1	1	1					
23	Z701135000	E.V.SIMP.220V COD.255.208	E.V.SIMP.220V COD.255.208	2	2	2	2	2	2					
	Z601156000	REGULADOR 8L RO. 254.034	REGULATOR 8L RED 254.034	2	2	2	2	2	2					
	Q032021000	TORNILLO ALOMADO M4X10	CURVED SCREW M4X10	4	4	4	4	4	4					

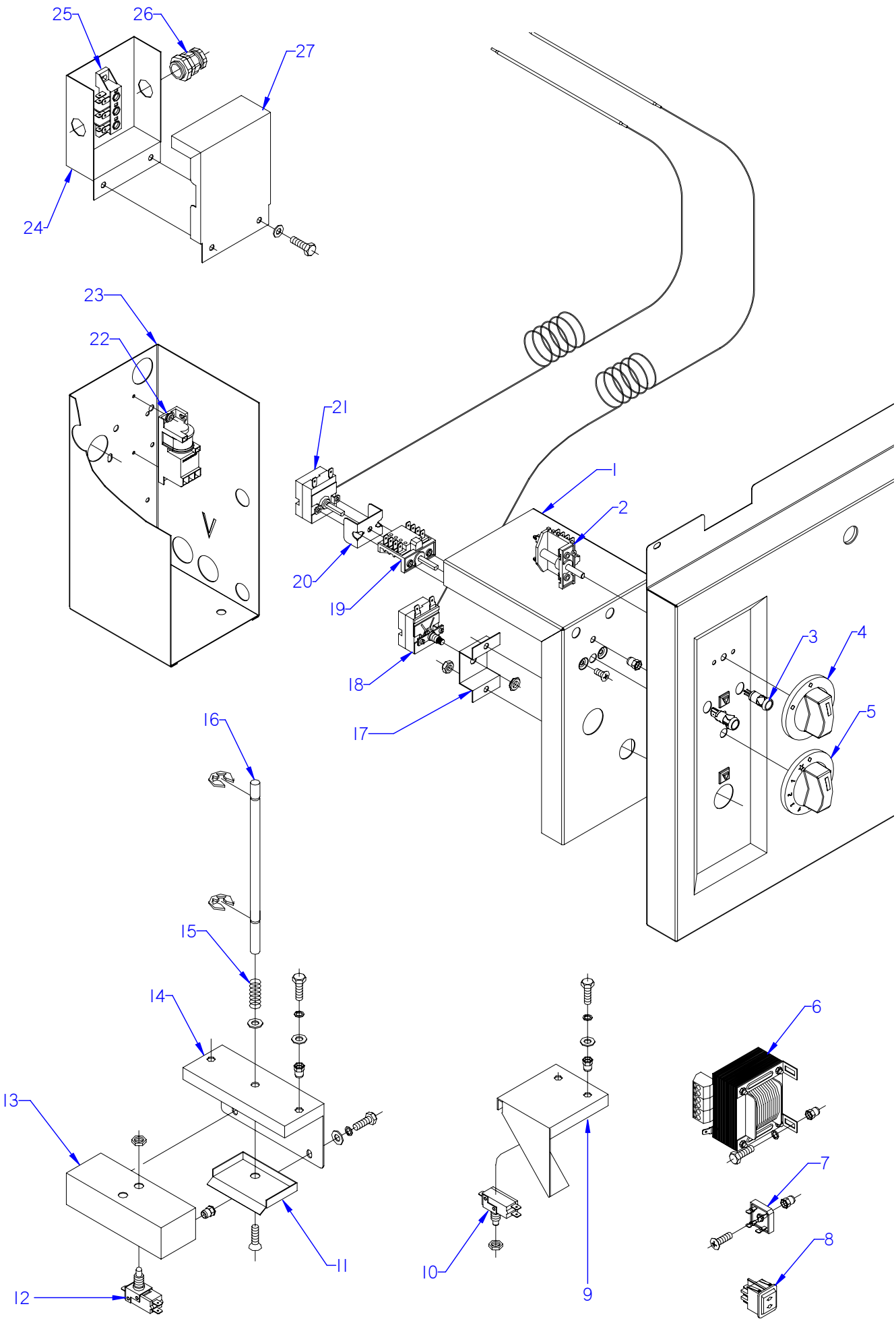

ITEM MARCADO EN COLOR = REPUESTO RECOMENDADO
COLOURED ITEM = RECOMMENDED SPARE PART

Nº plano / N º plane	Firma	Fecha / Date	Denominación / Denomination: FUNCIONAL ELECTRICO / FUNCTIONAL ELECTRICAL	Lamina / Sheet	
C-2924		2011-11	SARTEN BASCUL. SBG9-10 / 15 I AD	5	Fagor Industrial S.Coop. FAGOR Oñate

MOD.	SARTEN BASCULANTE TILTING BRATT PANS	ZONA / ZONE	PARTE FUNCIONAL ELECTRICO FUNCTIONAL ELECTRICAL PART	PLANO DIAGRAM	C-2924

ITEM	CODIGO REFERENCE	DENOMINACION	DENOMINATION	SBG9-10 I AD	SBG9-10 I M AD	SBG9-15 I M AD						ELIMINADO ELIMINATED	INTRODUCID. INTRODUCED	NOTAS
1	X082629000	TAPA CAJA SOPOR. VALVULA AD	VALVE SUPPORT BOX COVER AD	1	1	1								
2	R693004000	CONMUTADOR DE FUNCIONES	FUNCTIONS SWITCH	1	1	1								
	Q151320000	TOR. ALOMADO M4X6 H.ZINCADO	CURVED SCREW M4X6 H. ZINC	2	2	2								
3	X143017000	PILOTO VERDE SARTEN	GREEN FRYPAN PILOT	1	1	1								
S/Nº	X143018000	PILOTO AMBAR SARTEN	FRYING PAM AMBER PILOT	1	1	1								
4	S142105000	MANDO AGUA MARMITA FG(08)	WATER PAN CONTROL FG(08)	1	1	1								
S/Nº	R052102000	JUNTA COMPONENT. ELECTRICOS	BOARD OF ELECTRICAL COMP.	1	1	1								
5	X022102000	BOTON DE MANDO SARTEN BASC.	CTRL BUTTON TILTING FRYPAN	1	1	1								
S/Nº	R052102000	JUNTA COMPONENT. ELECTRICOS	BOARD OF ELECTRICAL COMP.	1	1	1								
6	X343021000	TRANSFORMADOR	TRANSFORMER	_	1	1								
	Q012031000	TORNILLO EXAGONAL M5x10 A304	HEXAGONAL BOLT M5x10 A304	_	4	4								
	Q302022000	ARANDELA 16x6x1,2 A304	WASHER 16x6x1.2 A304	_	1	1								
	X082632000	TAPA TRANSFORMADOR AD	TRANSFORMER COVER AD	_	1	1								
	Q012031000	TORNILLO EXAGONAL M5x10 A304	HEXAGONAL BOLT M5x10 A304	_	4	4								
	Q302022000	ARANDELA 16x6x1,2 A304	WASHER 16x6x1.2 A304	_	4	4								
	X082631000	CAJA TRANSFORMADOR AD	TRANSFORMER BOX AD	_	1	1								
	Q012031000	TORNILLO EXAGONAL M5x10 A304	HEXAGONAL BOLT M5x10 A304	_	4	4								
	Q302022000	ARANDELA 16x6x1,2 A304	WASHER 16x6x1.2 A304	_	4	4								
	X082633000	ESCU. AMARRE TAPA TRANSF. AD	TRANSFORMER COVER FAST. SI	_	1	1								
	Q419005000	REMACHE 4x8 ALMG3 / ALUMINIO	RIVET 4X8 ALMG3 / ALUMINIUM	_	4	4								
7	X343022000	PUENTE RECTIFICADOR FB 3502	RECTIFIER BRIDGE FB 3502	_	1	1								
8	X022106000	BOTON PULSADOR	PRESS BUTTON	_	1	1								
	X022107000	CUERPO PULSADOR	PRESS BUTTON BODY	_	1	1								
	X022136000	PROTECTOR PULSADOR	PRESS BUTTON PROTECTOR	_	1	4								
	X022137000	MARCO PROTECTOR PULSADOR	PRESS BUTTON PROTEC. MARK	_	1	4								
	X022109000	INTERRUPTOR PULSADOR	PRESS BUTTON SWITCH	_	2	4								
9	X082642000	SOPORTE MICRO AD	MICRO BRACKET AD	_	1	1								
	Q221342000	REMACHE EXAGONAL M5	HEXAGONAL RIVET M5	_	2	2								
	Q012031000	TORNILLO EXAGONAL M5x10 A304	HEXAGONAL BOLT M5x10 A304	_	2	2								
	Q302022000	ARANDELA 16x6x1,2 A304	WASHER 16x6x1.2 A304	_	2	2								

MOD.	SARTEN BASCULANTE TILTING BRATT PANS	ZONA / ZONE	PARTE FUNCIONAL ELECTRICO FUNCTIONAL ELECTRICAL PART	PLANO DIAGRAM	C-2924

ITEM	CODIGO REFERENCE	DENOMINACION	DENOMINATION	SBG9-10 I AD	SBG9-10 I M AD	SBG9-15 I M AD						ELIMINADO ELIMINATED	INTRODUCID. INTRODUCED	NOTAS
10	X343015000	MICRORRUPTOR 32280001	MICROSWITCH 32280001	_	2	2								
	Q222005000	TUERCA EXAGONAL M10x0,75	HEXAGONAL NUT M10x0.75	_	2	2								
11	X022621000	PROTECCION SUPERIOR AD	UPPER PROTECTION AD	1	1	1								
	Q152024000	TORNILLO AVELLANADO M4x8 A30	COUNTERSUNK BOLT M4X8 A304	1	1	1								
12	X343015000	MICRORRUPTOR 32280001	MICROSWITCH 32280001	1	1	1								
13	X022620000	CAJA PORTA MICRO AD	MICRO HOLDER BOX AD	1	1	1								
	Q221342000	REMACHE EXAGONAL M5	HEXAGONAL RIVET M5	2	2	2								
	Q012031000	TORNILLO EXAGONAL M5x10 A304	HEXAGONAL BOLT M5x10 A304	2	2	2								
	Q302022000	ARANDELA 16x6x1,2 A304	WASHER 16x6x1.2 A304	2	2	2								
	Q262030000	ARANDELA GROW. A5 A304	WASHER GROW. A5 A304	2	2	2								
14	X022619000	SOPORTE CAJA PORTA MICRO AD	MICRO HOLDER BOX SUPPORT	1	1	1								
	Q221342000	REMACHE EXAGONAL M5	HEXAGONAL RIVET M5	2	2	2								
	Q012031000	TORNILLO EXAGONAL M5x10 A304	HEXAGONAL BOLT M5x10 A304	2	2	2								
	Q302022000	ARANDELA 16x6x1,2 A304	WASHER 16x6x1.2 A304	2	2	2								
	Q262030000	ARANDELA GROW. A5 A304	WASHER GROW. A5 A304	2	2	2								
15	Z700603000	MUELLE 07777	SPRING 07777	1	1	1								
16	X152682000	EJE PULSADOR MICRO	MICRO BUTTON SHAFT	1	1	1								
	Q271033000	ARANDELA DE SEGURIDAD Ø6	SAFETY WASHER Ø6	2	2	2								
17	X082628000	SOPORTE LIMITADOR AD	LIMITER SUPPORT AD	1	1	1								
	Q162030000	TUERCA EXAGONAL M5	HEXAGONAL NUT M5	2	2	2								
18	R612103000	TERMOSTATO LIMITADOR	THERMOSTAT LIMITER	1	1	1								
	Q223022000	TUERCA EXAGONAL M8x1 LATON	HEXAGONAL NUT M8x1 BRASS.	1	1	1								
	Q013023000	TORNILL. EXAGONAL M4x20 LATO	HEXAGONAL BOLT M4X20 BRASS	1	1	1								
	Q163020000	TUERCA EXAGONAL M4 LATON	HEXAGONAL NUT M4 BRASS	1	1	1								
	Q183001000	TUERCA CUADRADA M4	SQUARE NUT M4	1	1	1								
	Q242020000	ARANDELA ABANICO A4 A304	FAN WASHER A4 A304	1	1	1								
	Q563004000	LENGÜETA COMPONENTES DOBLE	DOUBLE COMPONENTS TONGUE	1	1	1								
	Z603022000	PLACA ASIENTO CONEXIÓN MASA	SEATING PLATE EARTH CONNEC	1	1	1								
19	X163007000	CONMUTADOR ACOPLE TERMOS	THERMOSTAT CONNECT SWITCH	1	1	1								
20	H363003000	"U" SOPORTE TERMOSTATO AD	THERMOSTAT U SUPPORT AD	1	1	1								

MOD.	SARTEN BASCULANTE TILTING BRATT PANS	ZONA / ZONE	PARTE FUNCIONAL ELECTRICO FUNCTIONAL ELECTRICAL PART	PLANO DIAGRAM	C-2924

ITEM	CODIGO REFERENCE	DENOMINACION	DENOMINATION	SBG9-10 I AD	SBG9-10 I M AD	SBG9-15 I M AD						ELIMINADO ELIMINATED	INTRODUCID. INTRODUCED	NOTAS
21	X153000000	TERMOSTATO 50-310 C	THERMOSTAT 50-310 C	1	1	1								
	Q042021000	TORNILL. AVELLANADO M4x10 A30	COUNTERSUNK BOLT M4X10 A30	2	2	2								
22	X163014000	ENCENDEDOR 2 BUJIAS	LIGHTER 2 SPARK PLUG	1	1	1								
	Q082005000	TORNILLO CHAP. 4,2X13 4.2X13	PLATE BOLT 4.2X13 4.2X13	2	2	2								
23	X082624000	SOPORTE VALVULA AD	VALVE SUPPORT AD	1	1	1								
	Q411304000	REMACHE AVIBULB Ø 4,8	AVIBULB RIVET Ø 4.8	4	4	4								
	Q221342000	REMACHE EXAGONAL M5	HEXAGONAL RIVET M5	2	2	2								
24	X082636000	CUADRO REGLETA AD	STRIP PANEL AD	1	1	1								
	Q221342000	REMACHE EXAGONAL M5	HEXAGONAL RIVET M5	2	2	2								
	Q012042000	TORNILLO EXAGONAL M6x15	HEXAGONAL BOLT M6x15	2	2	2								
	Q302022000	ARANDELA 16x6x1,2 A304	WASHER 16x6x1.2 A304	2	2	2								
25	U183046000	REGLETA AUXILIAR	AUXILIARY STRIP	1	1	1								
	Q152004000	TORN. APLASTADO M5x13 A304	HEXAGONAL FLAT SCREW M5x1	2	2	2								
26	R073004000	PRENSA ESTOPAS	STUFFING BOX	2	2	2								
	R073025000	CONTRATUERCA (GAES) 790.1300.	COUNTERNUT (GAES) 790.1300.0	2	2	2								
	R073026000	JUNTA DE GOMA (GAES)	RUBBER SEAL (GAES)	2	2	2								
27	X082634000	TAPA CAJA REGLETA AD	STRIP BOX COVER AD	1	1	1								

MOD.	SARTEN BASCULANTE TILTING BRATT PANS	ZONA / ZONE	VARIOS / MISCELLANEOUS	PLANO DIAGRAM	C-2915

ITEM	CODIGO REFERENCE	DENOMINACION	DENOMINATION	SBG9-10 I AD	SBG9-10 I AD S	SBG9-10 I M AD	SBG9-10 I M S AD	SBG9-15 I M AD	SBG9-15 I M AD S			ELIMINADO ELIMINATED	INTRODUCID. INTRODUCED	NOTAS
	X026502000	FOLLETO DE INSTRUCC. SBG AD	INSTRUCTION LEAFLET SBG AD	1	1	1	1	1	1					
	X343023000	ESQUEMA TEORICO ADHESIVO	THEOR. DIAGRAM LABEL	1	1	1	1	1	1					HC-75426
	X463004000	PLANO DE MONTAJE SBG	ASSEMBLY PLAN SBG	1	1	1	1	1	1					HC-80159
	X463007000	LEYENDA SARTEN BASCULANTE	TILTING PAN LEGEND	1	1	1	1	1	1					HC-83262
	X153021000	INSTALACION ELECTRICA	ELECTRIC INSTALLATION	1	1	1	1	1	1					
	X463006000	CABLEADO ENTRADA DE AGUA	IWATER INPUT WIRING	1	1	1	1	1	1					
	Z603041000	CABLE ALIMENTACION	POWER CABLE	1	1	1	1	1	1					
19	R275027000	CABLEADO ELECTROSIT 927.012	WIRING ELECTROSIT 927.012	1	1	1	1	1	1					
	U333003000	CABLE MASA ENCENDEDOR	LIGHTER EARTH CABLE	1	1	1	1	1	1					
	U323007000	CABLE ENCENDEDOR A BUJIA	LIGHTER TO SPARK PLUG CABLE	1	1	1	1	1	1					
	X163002000	CABLE BUJIA	SPARK PLUG CABLE	1	1	1	1	1	1					
	X283000000	CABLEADO MOTOR	MOTOR WIRING	_	1	1	1	1	1					

SBG 910, 710, 915 M, 910 M, 910 A,

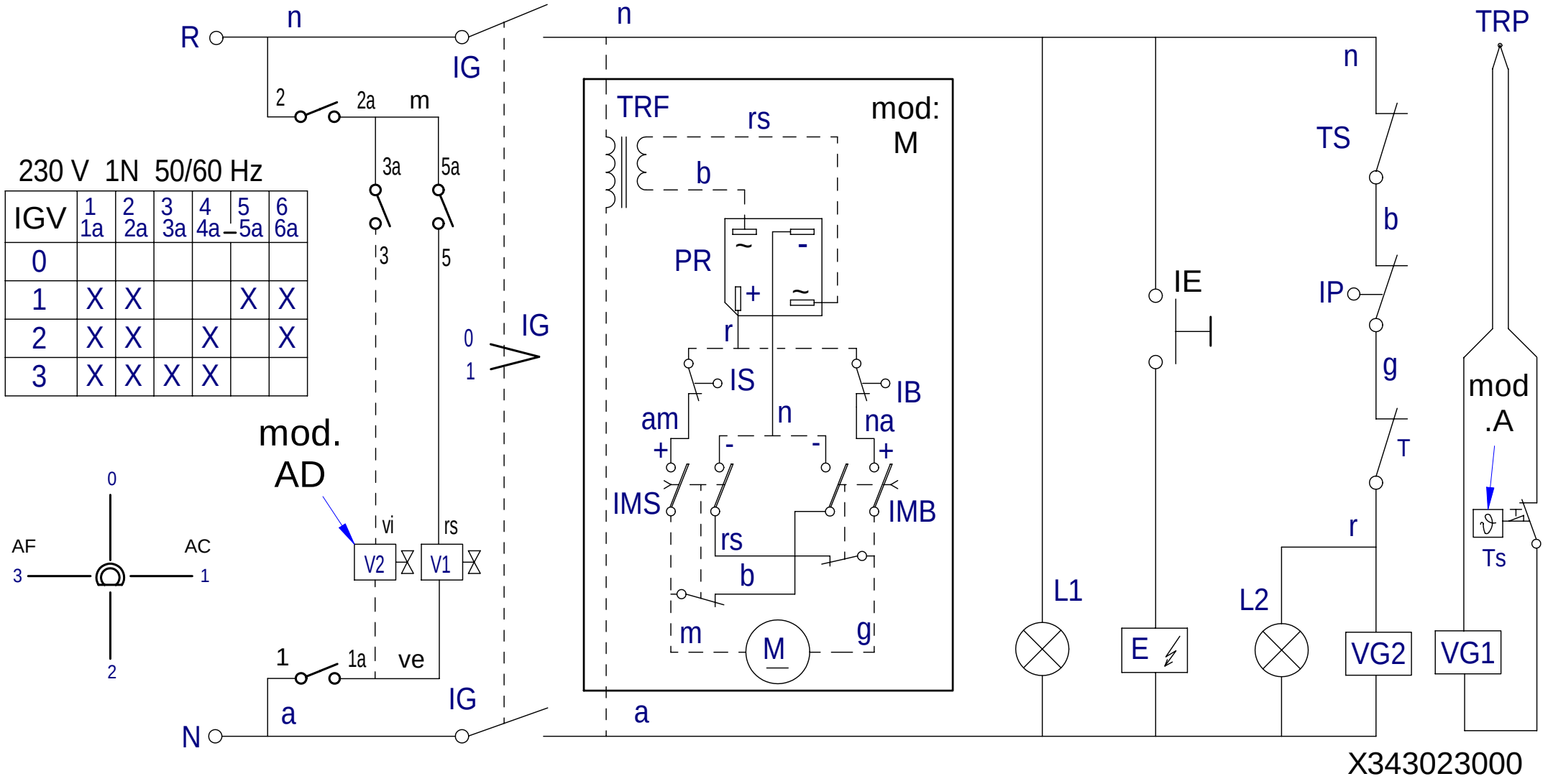

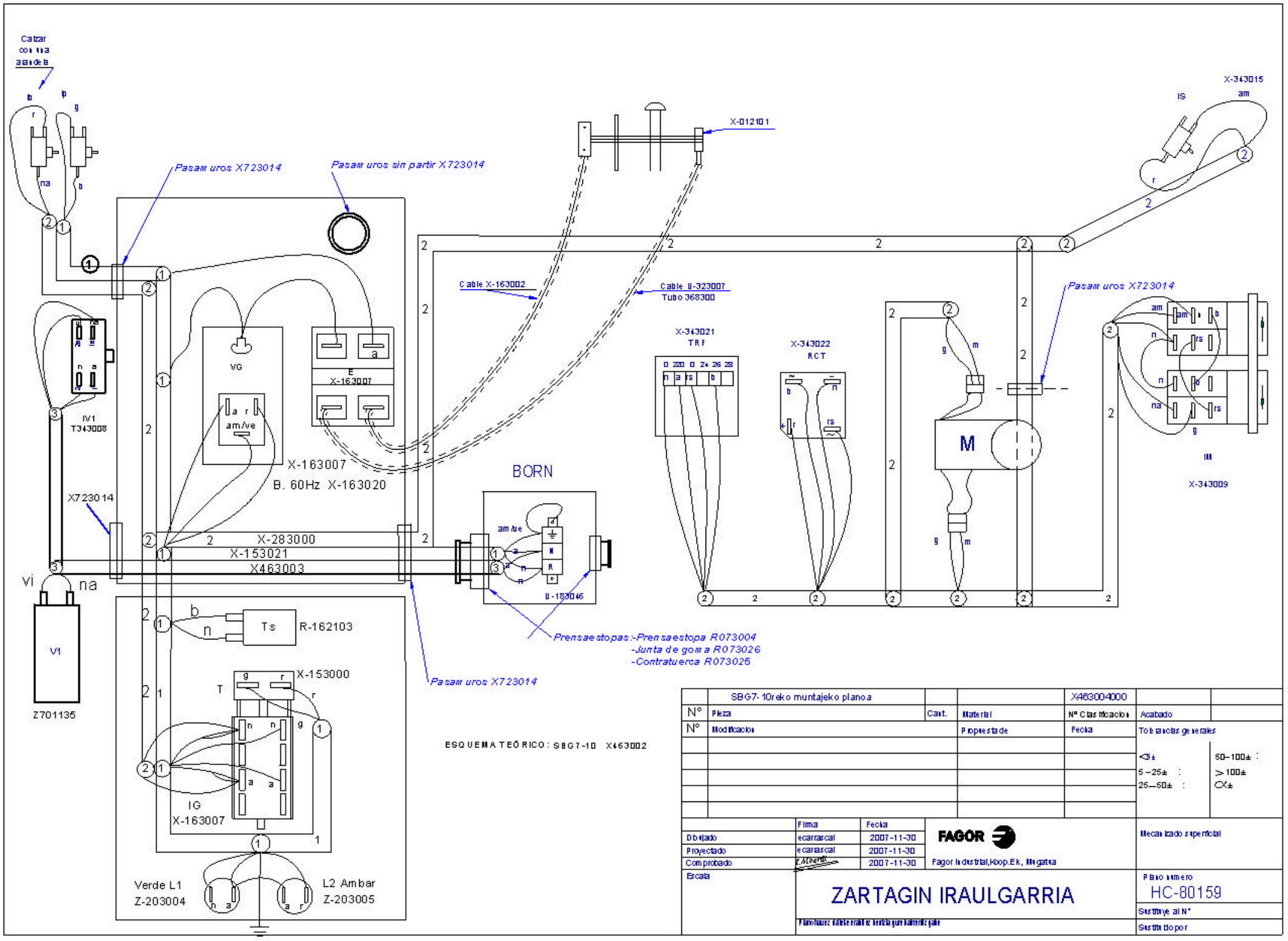

Calzar con una arandela
Pasam uros X723014
Pasam uros sin partir X723014
X-012101
X-343015
IS
am
Cable X-163002
Cable U-323007
Tubo 368300
Pasam uros X723014
X-343021
TRF
X-343022
RCT
M
IM
X-343009
IV1
T343008
VG
am/ve
E
X-163007
X-163007
B. 60Hz X-163020
BORN
X723014
X-283000
X-153021
X463003
U-183046
vi
na
V1
Z701135
Ts
R-162103
X-153000
T
IG
X-163007
Verde L1
Z-203004
L2 Ambar
Z-203005
Prensaestopas:-Prensaestopa R073004
-Junta de goma R073026
-Contratuerca R073025
Pasam uros X723014
ESQUEMA TEÓRICO: SBG7-10 X463002
SBG7-10reko muntajeko planoa
X463004000
N° Pieza
Cant.
Material
Nº Clasificacion
Acabado
N° Modificacion
Propuesta de
Fecha
Tolerancias generales
<5±
5-25±
25-50±
50-100±
>100±
Dibujado
Proyectado
Comprobado
Escala
Firma
Fecha
ecarrascal
2007-11-30
ecarrascal
2007-11-30
2007-11-30
FAGOR
Fagor Industrial,Koop.Ek, Mugatua
Mecanizado superficial
ZARTAGIN IRAULGARRIA
Plano numero
HC-80159
Sustituye al N°
Sustituido por

Simb/LENG		ESPAÑOL	ENGLISH	FRANÇAIS	DEUTSCH	ITALIANO
C1, C2	=	Contactor Calentamiento	Contacteur Chauffe	Heating Contactor	Heizschütz	Contatore Riscaldamento
CN	=	Control de Nivel de agua	Control of water Level	Commande de niveau d'eau	Steuerung des Wasserspiegeles	Controllo del livello d'acqua
E	=	Generador de Chispa	Spark generator	Générateur d'étincelle	Funkengenerator	Generatore della scintilla
IB	=	Micro tope bajada	Microswitch of lowered Limit	Microcontact de la limite abaissée	Mikroschalter der gesenkten Begrenzung	Microinterruttore del limite abbassato
IG	=	Interruptor general	General switch	Commutateur général	Allgemeiner Schalter	Interruttore generale
IGV	=	Interruptor electrovalvulas de agua	Switch electrovalvula water	Commutez l'eau d'electrovalvula	Schalten Sie electrovalvula Wasser	Commuti l'acqua di electrovalvula
IE	=	Pulsador de Encendido	Ignition Switch	Commutateur d'allumage	Zündung-Schalter	Interruttore di accensione
IMB	=	Pulsador bajada	lowered switch	commutateur abaissé	gesenkter Schalter	interruttore abbassato
IMS	=	Pulsador subida	Raised switch	Commutateur augmenté	Angehobener Schalter	Interruttore sollevato
IP	=	Micro seguridad	security microswitch	microcontact de sécurité	Sicherheitsmikroschalter	microinterruttore di sicurezza
IS	=	Micro tope subida	Microswitch of rise Limit	Microcontact de la limite d'élévation	Mikroschalter der Aufstieg Begrenzung	Microinterruttore del limite di aumento
L1	=	Lámpara marcha	Operation Light	Lumière d'opération	Betriebs-Licht	Luce di funzionamento
L2	=	Lámpara calentamiento	Heating Light	Lumière de chauffage	Heizungs-Licht	Luce del riscaldamento
M	=	Motor de elevacion	Motor of elevation	Moteur d'altitude	Motor des Aufzugs	Motore dell'altezza
P	=	Presostato de Camara	Water Level Switch	Commutateur de niveau d'eau	Wasserspiegel-Schalter	Interruttore del livello d'acqua
PR	=	Puente rectificador	Electrical bridge rectifier	Pont redresseur électrique	Elektrischer Brückengleichrichter	Raddrizzatore a ponte elettrico
R	=	Resistencia Calentamiento.	Résistance Chauffe	Heating Resistors	Widerstand Aufheizung	Resistenza Riscaldamento
RE	=	Regulador Energia	Regulator of Energy	Régulateur d'énergie	Regler von Energie	Regolatore di energia
T	=	Termostato	Thermostat	Thermostat	Thermostat	Termostato
TRF	=	Transformador	Transformer	Transformateur	Transformator	Trasformatore
TS	=	Termostato de seguridad	Security Thermostat	Thermostat de sécurité	Sicherheits-Thermostat	Termostato di sicurezza
TRP	=	Termopar	Thermocouple	Thermocouple	Thermoelement	Termocoppia
VG1,VG2	=	ElectroVálvula gas	Electrical gas valve	Clapet à gaz électrique	Elektrisches Gichtventil	Valvola a gas elettrica
V1	=	Valvula Agua CALIENTE	ElectroValve of Hot Water	Électrovalve d'eau chaude	Elektroventil des Heißwassers	Elettrovalvola di acqua calda
V2	=	Valvula Agua FRIA	ElectroValve of cold Water	Électrovalve d'eau froide	Elektroventil des kalten Wassers	Elettrovalvola di acqua fredda
V3	=	Valvula Agua Caldera	electrovalve of water boiler	électrovalve de chauffe-eau	Elektroventil des Warmwasserboilers	elettrovalvola del reattore ad acqua
	=	**COLORES**	**COLOUR**	**COULEURS**	**FARBEN**	**COLORE**
a	=	Azul	Blue	Bleu	Blau	Blu
am	=	Amarillo	Yellow	Jaune	Gelb	Giallo
am/ve	=	Amarillo/verde	Yellow / green	Jaune / vert	Gelb/grün	Giallo/verde
b	=	Blanco	White	Blanc	Weiß	Bianco
g	=	Gris	Grey	Gris	Grau	Grigio
m	=	Marrón	Brown	Marron	Braun	Marrone
n	=	Negro	Black	Noir	Schwarz	Nero
na	=	Naranja	Orange	Orange	Orange	Arancio
r	=	Rojo	Red	Rouge	Rot	Rosso
rs	=	Rosa	Pink	Rose	Rosa	Roseo
ve	=	Verde	Green	Vert	Grün	Verde
vi	=	Violeta	Purple	Violet	Violett	Viola
						X463007000