Catalogue pieces detachées
PT1500-M - ed. 2000

1 - LAVAGE INFERIEUR
2 - LAVAGE SUPERIEUR
3 - CUVE LAVAGE
4 - COMPOSANTS RINÇAGE
5 - BOILER
6 - GLISSIERE ET FILTRES
7 - TABLEAU ELECTRIQUE
8 - BOITE ELECTRIQUE AUXILIAIRE
9 - SOCLE
10 - CARROSSERIE CAPOTTE
11 - PORTE CONTREBALANCEE'

lamber	LAVAGGIO INFERIORE - LAVAGE INFERIEUR LOWER WASHING - UNTERER WASCHROHR	MOD. **PT1500**	TAV. **1 B** ED. 09/00

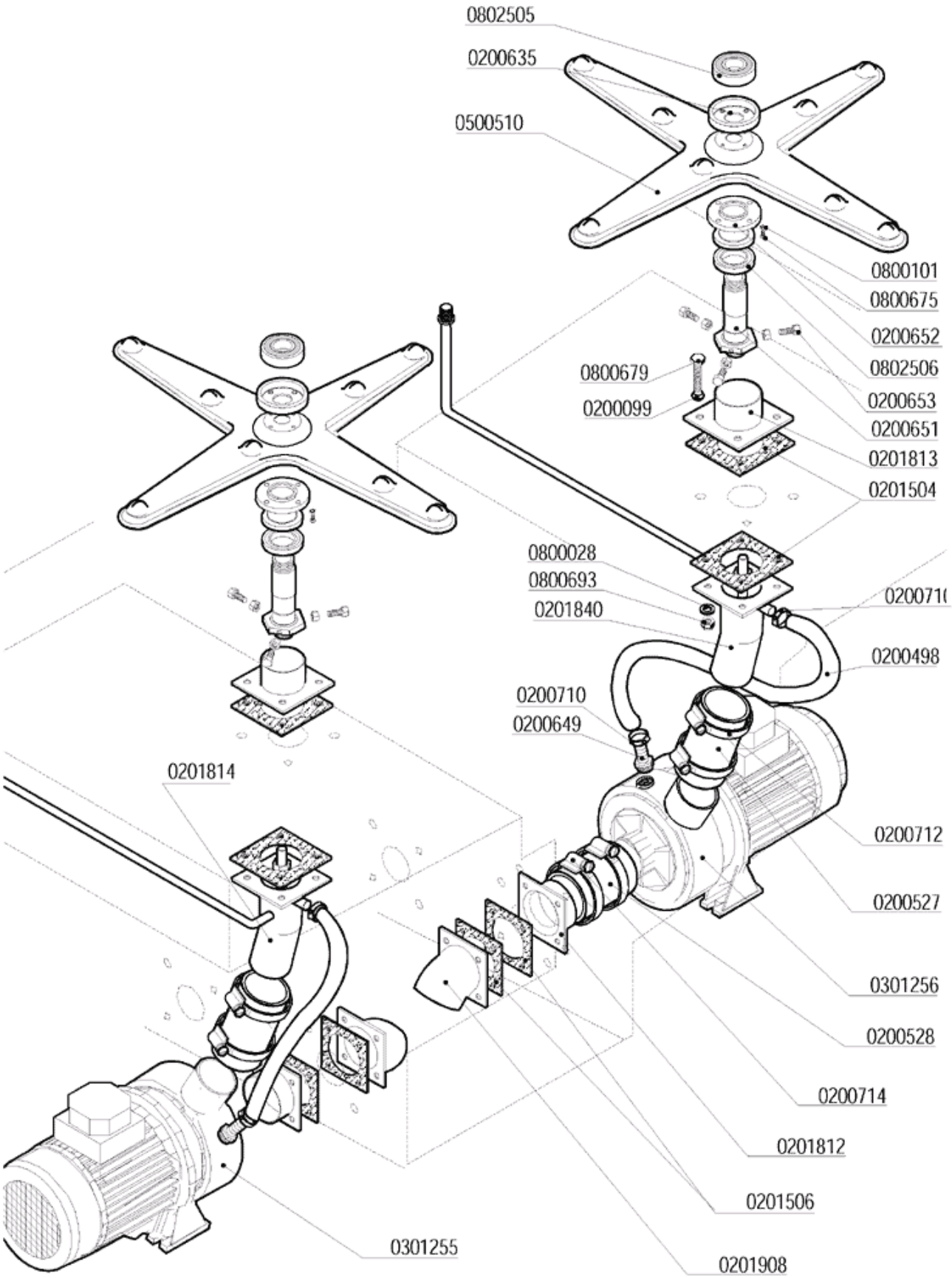

lamber	LAVAGGIO SUPERIORE - LAVAGE SUPERIEUR UPPER WASHING - OBERER WASCHROHR	MOD. **PT1500**	TAV. **2 B** ED. 09/00

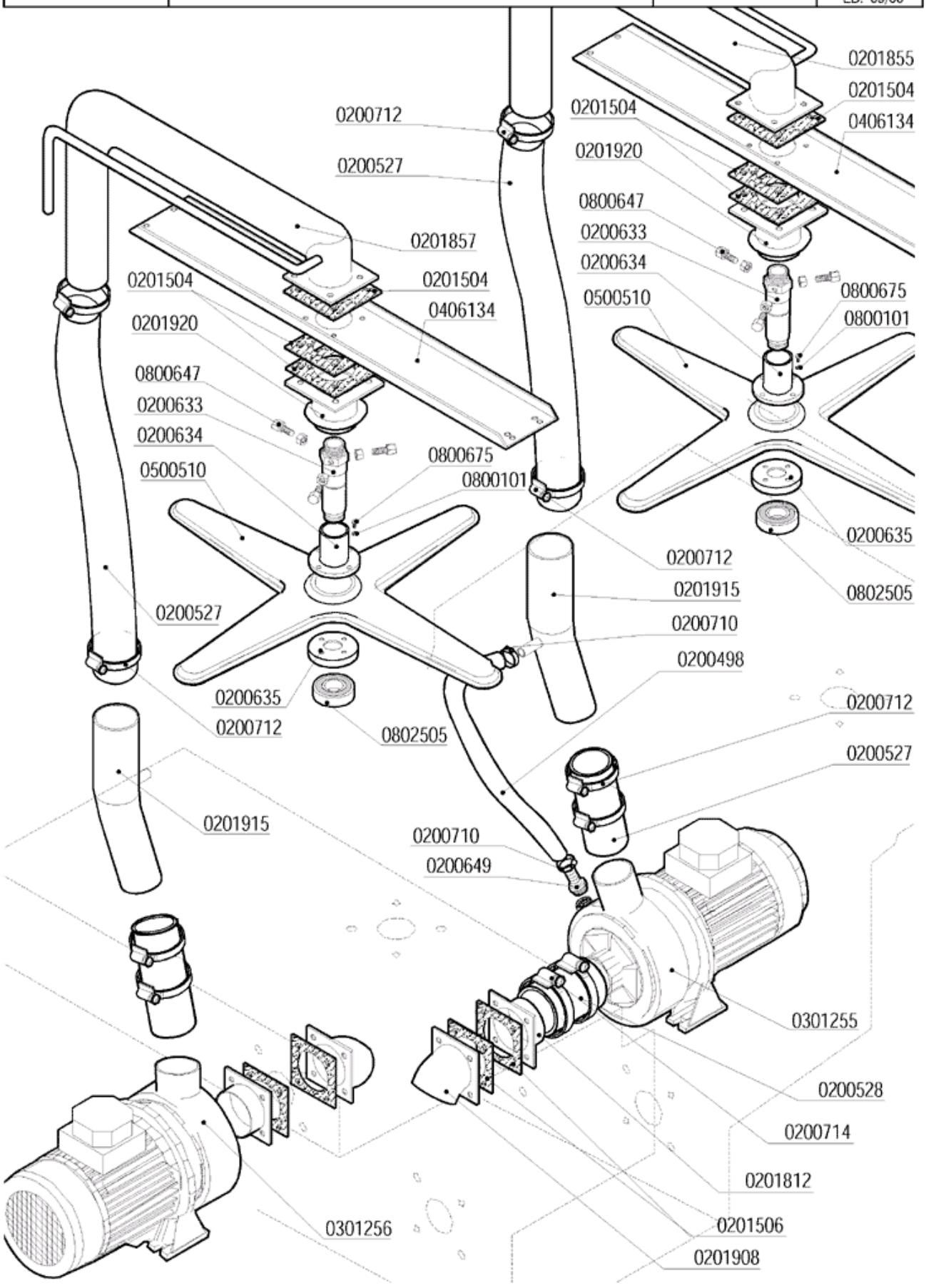

lamber	VASCA LAVAGGIO - CUVE LAVAGE WASH TANK - WASCHTANKROHR	MOD. **PT1500**	TAV. **3 B** ED. 09/00

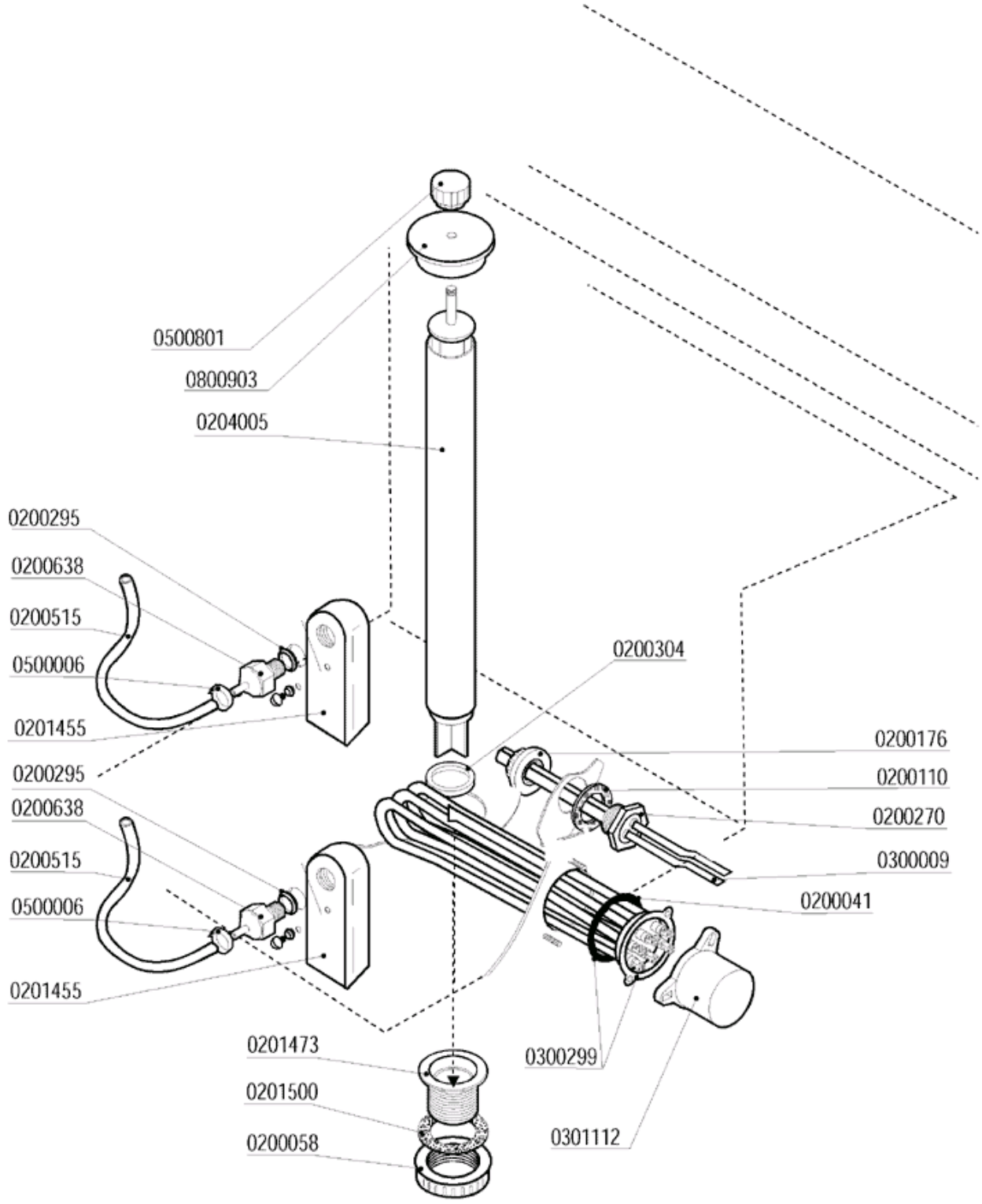

lamber	GRUPPO RISCIACQUO - COMPOSANTS RINCAGE RINSE COMPONENTS - NACHSPÜLROHR	MOD. **PT1500**	TAV. **4 B** ED.09/00

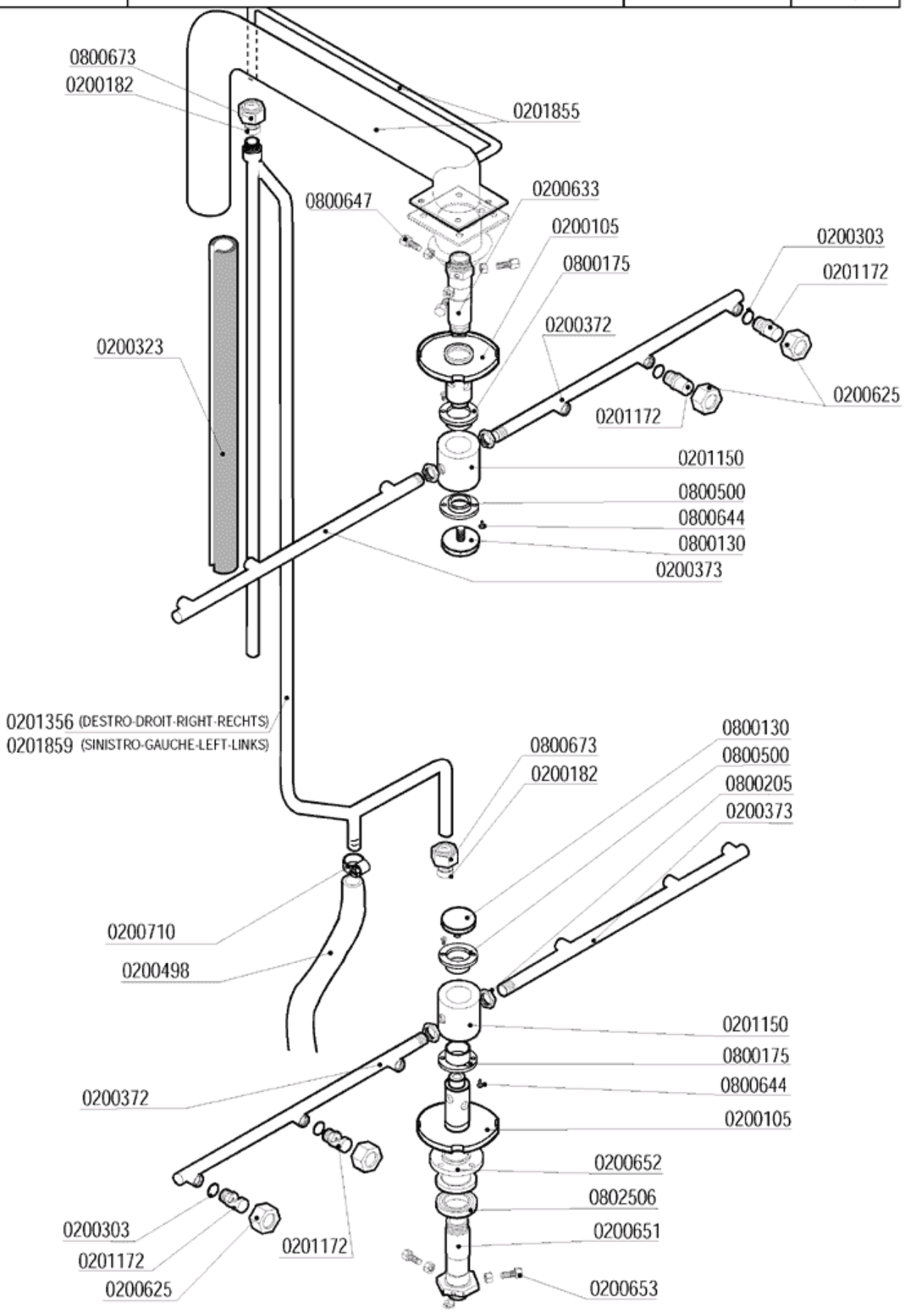

lamber	GRUPPO BOILER DISTRIBUZIONE ACQUA SURCHAUFFEUR - BOILER - BOILER	MOD. **PT1500**	TAV. **5 B** ED. 09/00

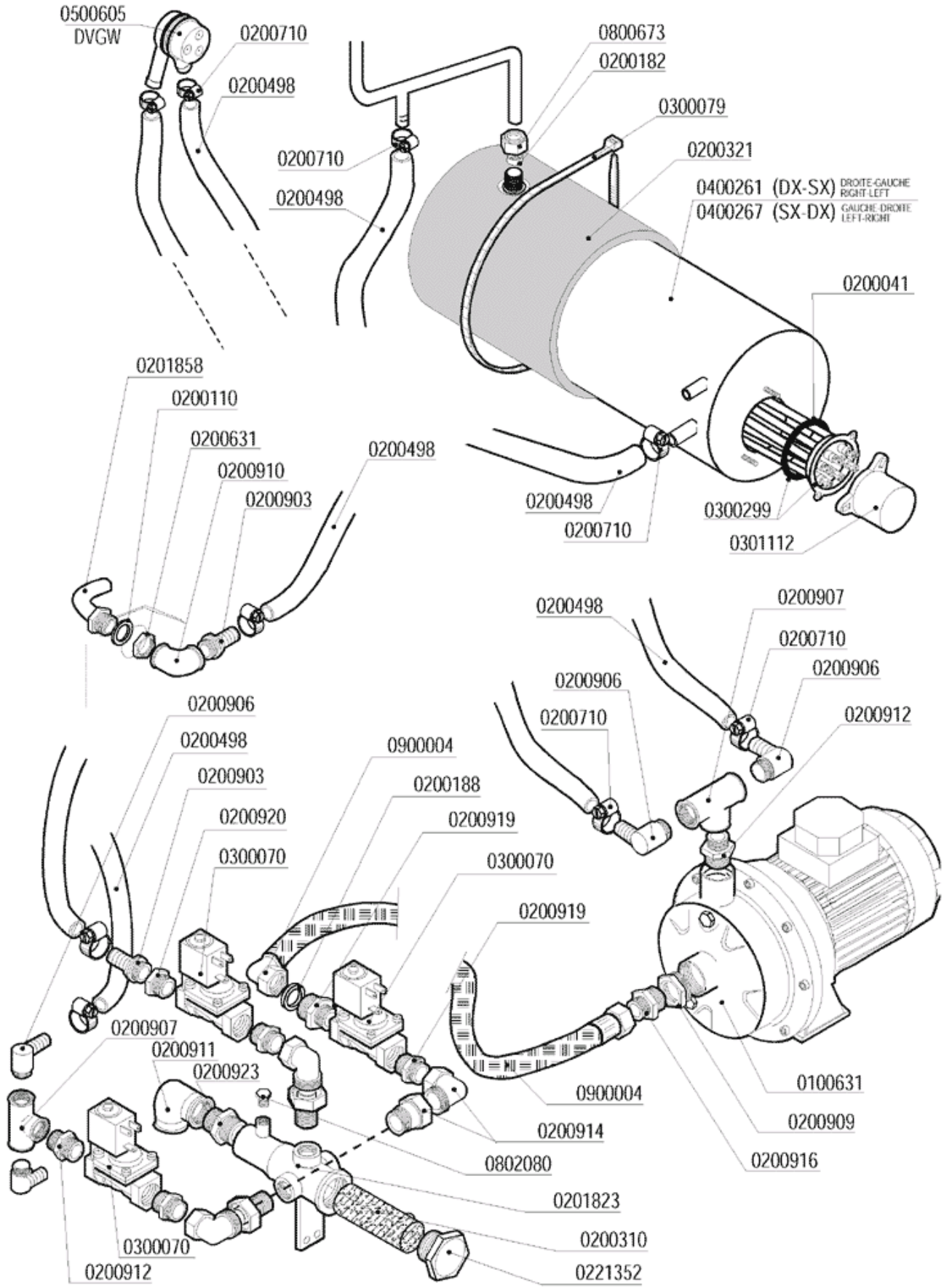

lamber	GUIDE E FILTRI - GLISSIERE ET FILTRES SLIDE AND FILTERS - KORBFÜHRUNG UND FILTER	MOD. **PT1500**	TAV. **6 B** ED. 09/00

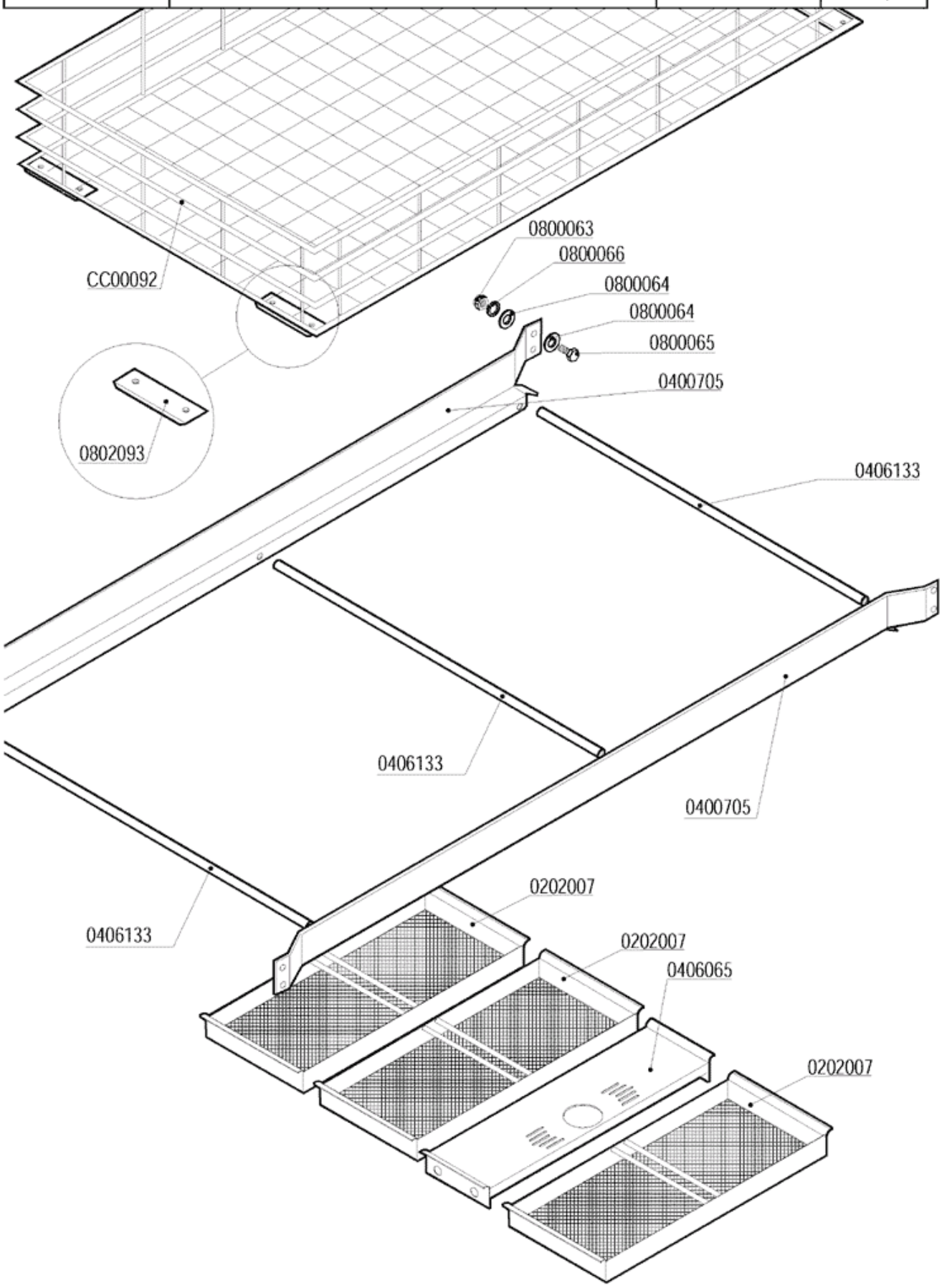

lamber

QUADRO ELETTRICO - TABLEAU ELECTRIQUE
CONTROL BOX - ELEKTRO SCHALTTAFEL

MOD. PT1500

TAV. 7 B

ED. 09/00

lamber	CASSETTA ELETTR. AUSILIARIA BOÎTE ELECTRIQUE AUXILIAIRE AUXILIARY CONTROL BOX - ELEKTRO SCHALTTAFEL	MOD. **PT1500**	TAV. **8 B** ED. 09/00

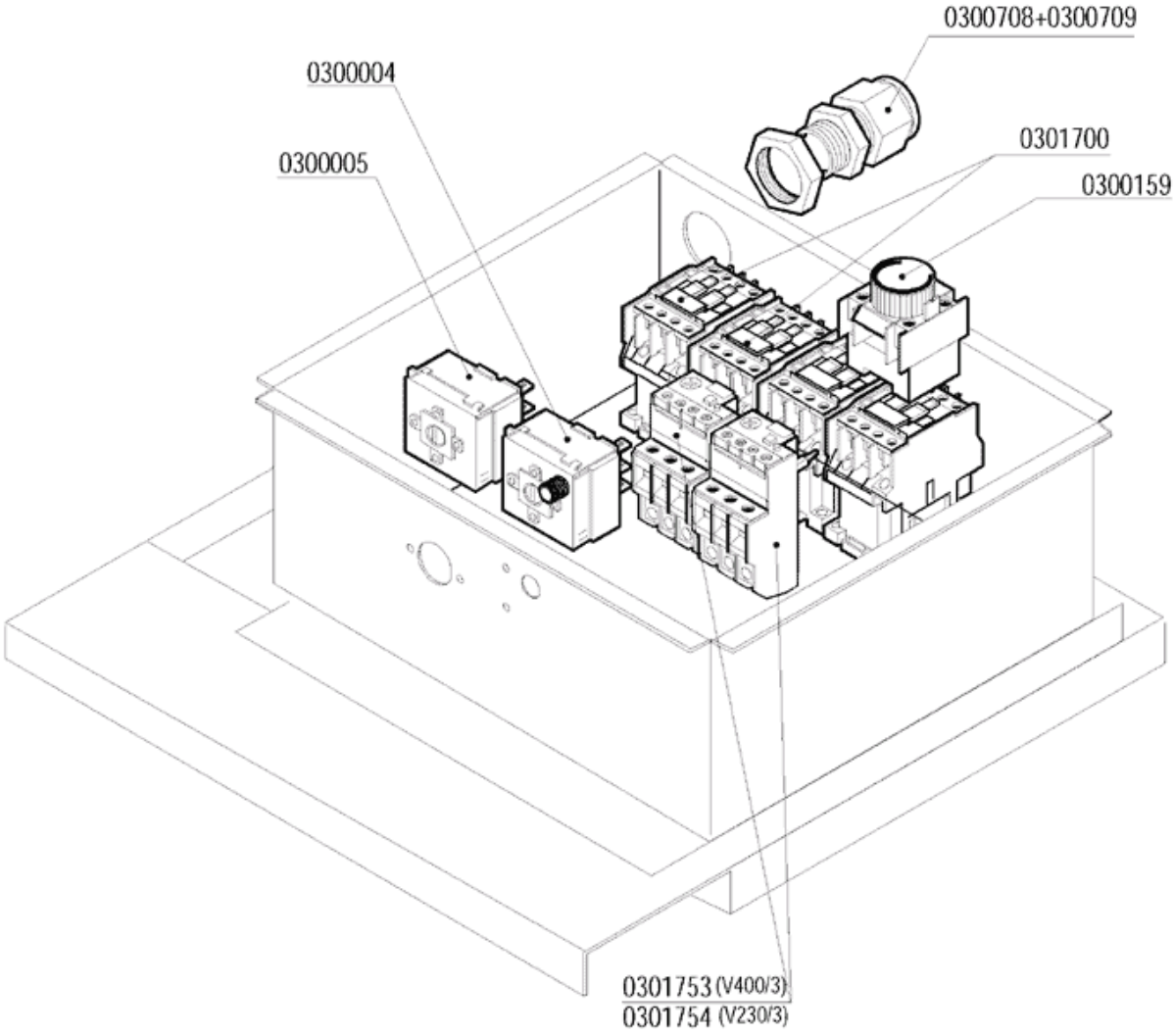

lamber	BASAMENTO - SOCLE BASE - SOCKEL	MOD. **PT1500**	TAV. **9 B** ED. 09/00

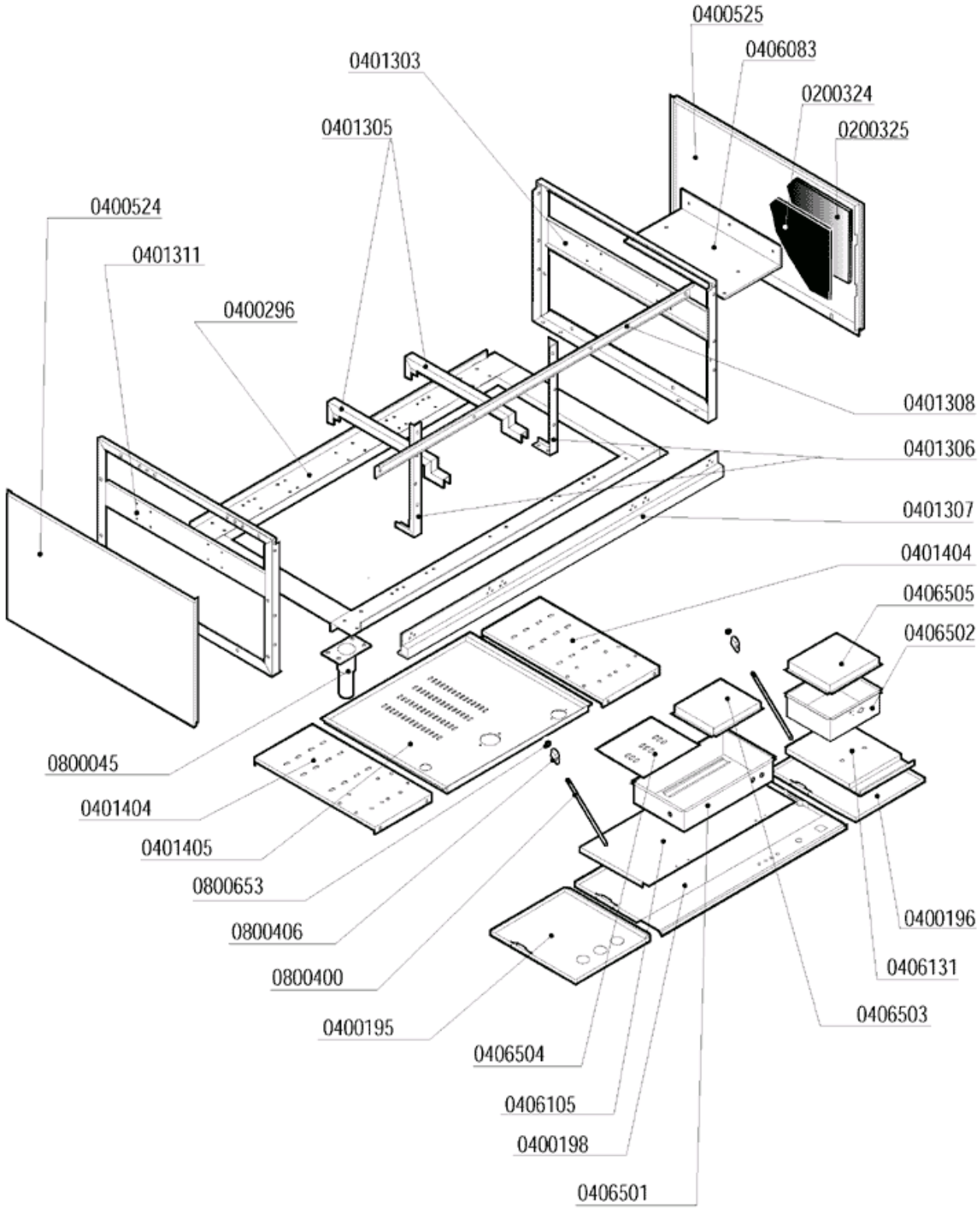

lamber	CARROZZERIA CAPOTTA - CARROSSERIE CAPOTE HOOD - KARROSSERIE HAUBE	MOD. **PT1500**	TAV. **10 B** ED. 09/00

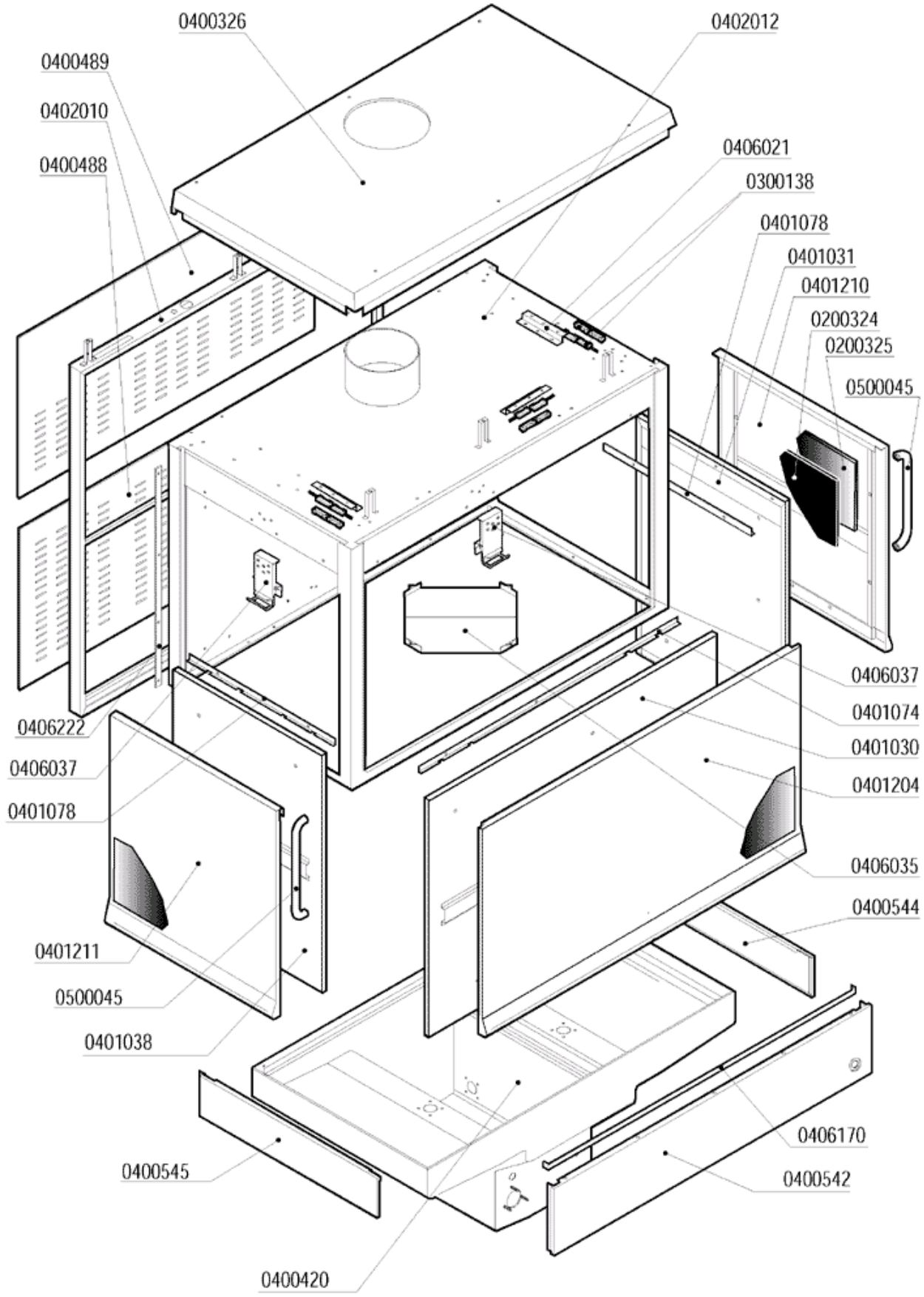

lamber	SPORTELLO CONTROBILANCIATO PORTE CONTREBALANCEE' COUNTERBALANCED DOOR - GEWICHTTÜR	MOD. **PT1500**	TAV. **11 B** ED. 09/00

