Modello/Type: **60/30 PCG - PCG/P**

cod./num. 2531359.00

data/date: 20/05/2013

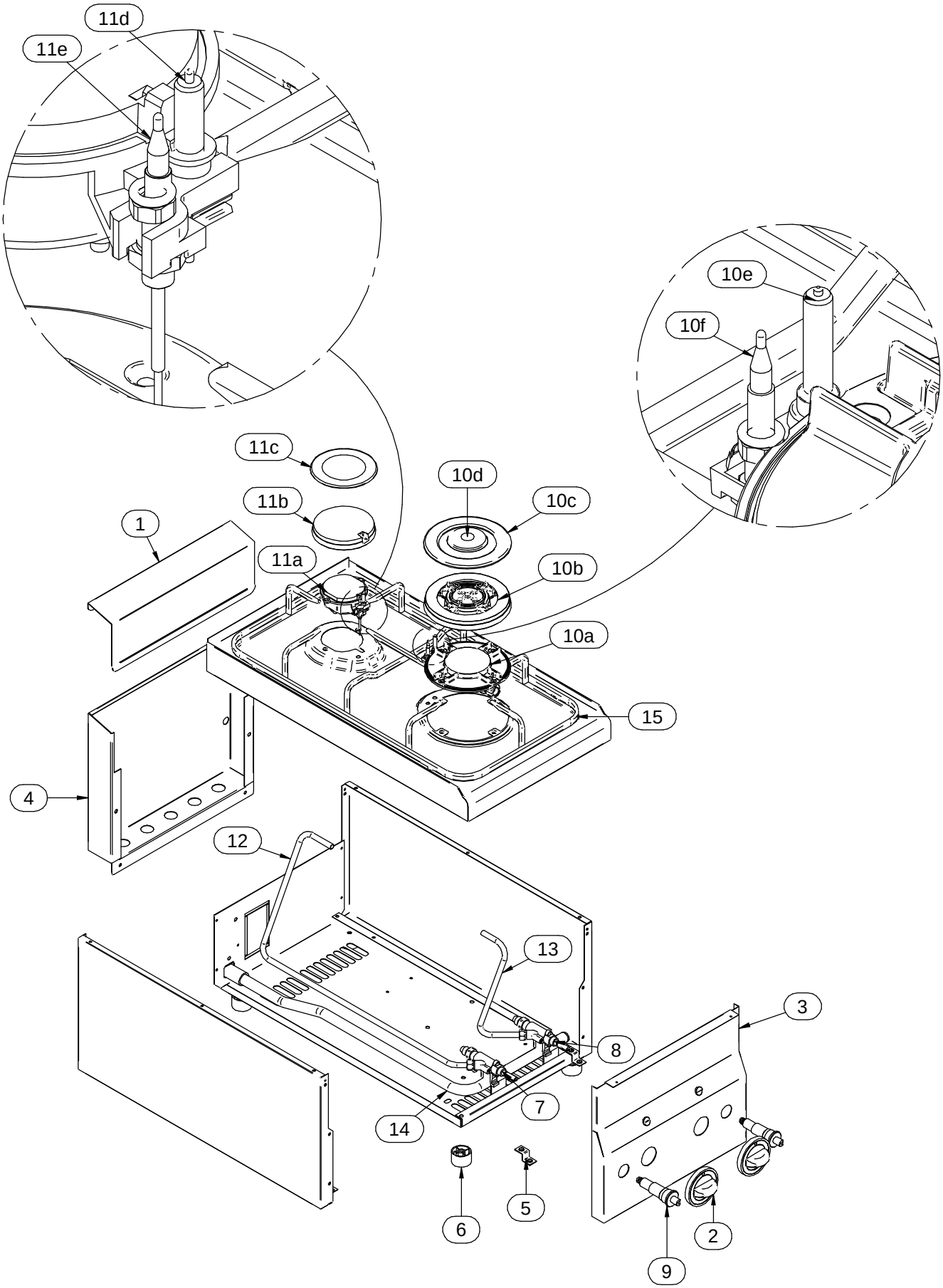

Modello Type:	60/30 PCG				cod. / num.	2531360.00
					data / date:	20/05/2013
POS. ITEM	CODICE CODE	DESCRIZIONE	DESCRIPTION	DENOMINATION	BENENNUNG	NOTE / NOTES
1	611.723.00	ALZATINA	UPSTAND	DOSSERET	AUFKANTUNG	
2	612.046.00	MANOPOLA	KNOB	BOUTON	DREHKNOPF	
3	256.040.00	CRUSCOTTO	CONTROL PANEL	BANDEAU	BEDIENBLENDE	
4	621.751.00	PANNELLO POSTERIORE	BACK PANEL	PANNEAU POSTERIEUR	HINTERBRETT	
5	256.002.00	STAFFA FISSAGGIO CRUSCOTTO	CONTROL PANEL FIXING BRACKET	EQUERRE FIXATION BANDEAU	BEFESTIGUNGSWINKEL BEDIENBLENDE	
6	651.001.00	PIEDINO	FOOT	PIED	STELLFUSS	
7	671.076.00	RUBINETTO GAS	GAS TAP	ROBINET GAZ	GASHAHN	
8	671.077.00	RUBINETTO GAS BRUCIATORE 3 CORONE	TRIPLE CROWN BURNER GAS TAP	ROBINET GAZ 3 COURONNES	GASHAHN 3 KRONEN	
9	672.006.00	ACCENDITORE PIEZO	PIEZO LIGHTER	ALLUMEUR PIEZO	PIEZOZÜNDER	
10	672.105.00	BRUCIATORE 3 CORONE	TRIPLE CROWN BURNER	BRULEUR A 3 COURONNES	BRENNER MIT 3 KRONEN	
10a	672.106.00	CORPO BRUCIATORE	BURNER BODY	CORPS BRULEUR	BRENNER KÖRPER	
10b	672.107.00	SPARTIFIAMMA	FLAMESPREADER	CHAPEAU BRULEUR	FLAMMENTEILER	
10c	672.108.00	COPERCHIO	LID	COUVERCLE	DECKEL	
10d	672.109.00	COPERCHIO	LID	COUVERCLE	DECKEL	
10e	256.003.00	CANDELA ACCENSIONE	IGNITION ELECTRODE	BOUGIE D'ALLUMAGE	KERZE SCHNELLBRENNER	
10f	256.004.00	TERMOCOPPIA	THERMOCOUPLE	THERMOCOUPLE	THERMOELEMENT	
11	672.110.00	BRUCIATORE	BURNER	BRULEUR	BRENNER	
11a	672.111.00	CORPO BRUCIATORE	BURNER BODY	CORPS BRULEUR	BRENNER KÖRPER	
11b	672.112.00	SPARTIFIAMMA	FLAMESPREADER	CHAPEAU BRULEUR	FLAMMENTEILER	
11c	672.113.00	COPERCHIO	LID	COUVERCLE	DECKEL	

Modello Type:	60/30 PCG				cod. / num.	2531360.00
					data / date:	20/05/2013
POS. ITEM	CODICE CODE	DESCRIZIONE	DESCRIPTION	DENOMINATION	BENENNUNG	NOTE / NOTES
11d	256.005.00	CANDELA ACCENSIONE	IGNITION ELECTRODE	BOUGIE D'ALLUMAGE	KERZE SCHNELLBRENNER	
11e	256.006.00	TERMOCOPPIA	THERMOCOUPLE	THERMOCOUPLE	THERMOELEMENT	
12	256.008.00	TUBO GAS	GAS PIPE	TUBE GAZ	GASROHR	
13	256.009.00	TUBO GAS	GAS PIPE	TUBE GAZ	GASROHR	
14	675.310.00	TUBO GAS	GAS PIPE	TUBE GAZ	GASROHR	
15	683.063.00	GRIGLIA	GRILL	GRILLE	GITTER	
16						
17						
18						
19						
20						
21						
22						
23						
24						
25						
26						
27						
28						
29						