DESPIECE TECNICO

Cocinas a Gas
Fourneaux à Gaz
Gas Ranges
Cucine a Gas
Fogões a Gás
Gas-Herde

GAMA 700

Modelos:

CG7-30I
CG7-30D
CG7-50
CG7-31I
CG7-31D
CG7-51

Mayo 2008 May

Revisado Mayo 2010

FAGOR

Fagor Industrial

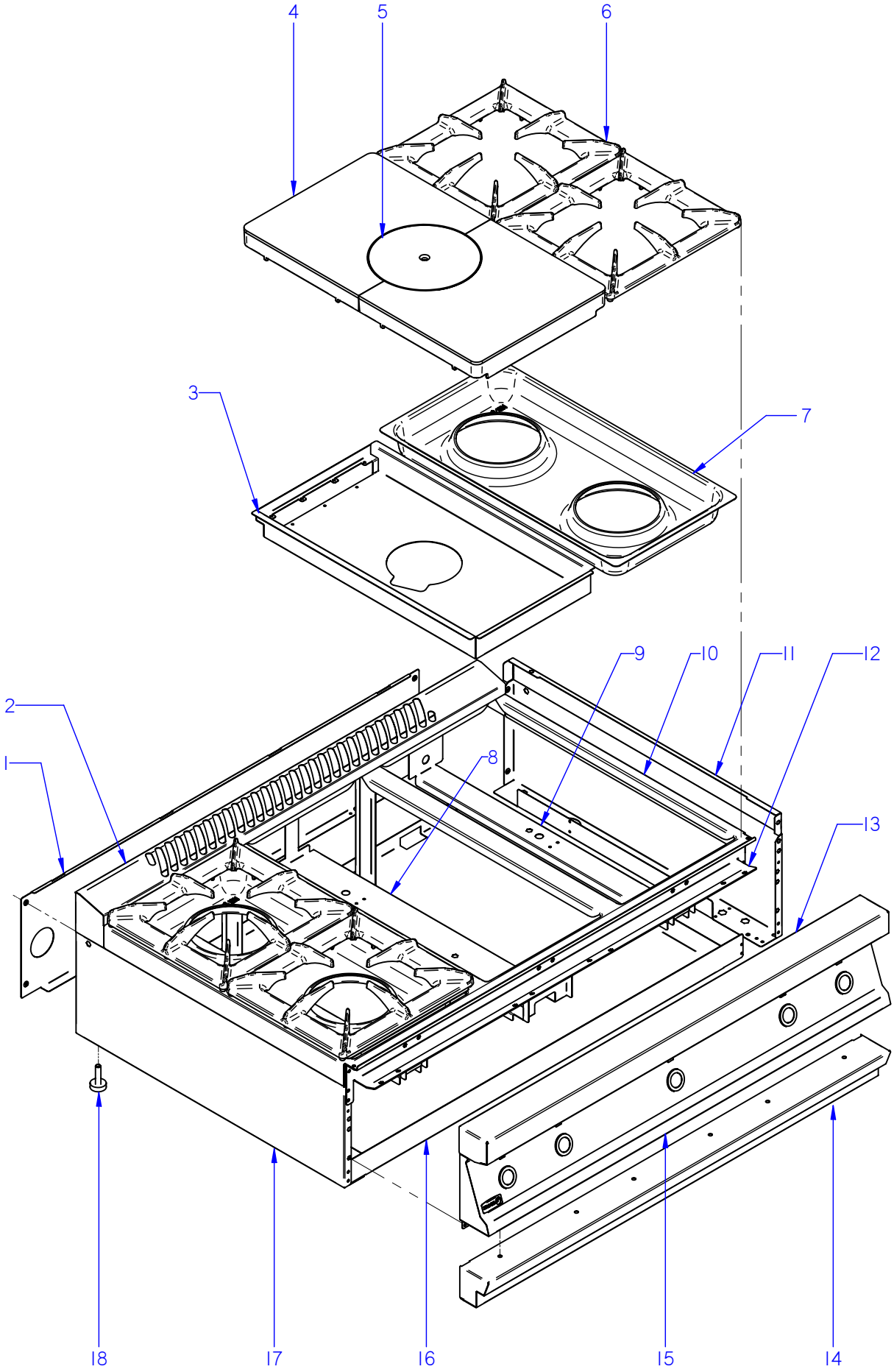

ITEM MARCADO EN COLOR = REPUESTO RECOMENDADO
COLOURED ITEM = RECOMMENDED SPARE PART

N plano	Firma	Fecha	Aparato	MUEBLE	Lamina	
C-2058		2008-05	COCINAS CG7-30 ; CG7-50		1	Fagor Industrial S.Coop. FAGOR Oñate

MOD.	COCINAS	ZONA	MUEBLE	PLANO	C-2058

ITEM	CODIGO	DENOMINACION	TEXTO	CG7-30 I	CG7-30 D	CG7-50					NOTAS
1	H602808000	PANEL POSTERIOR SUPERIOR 1M	REAR UPPER PANEL 1M	1	1	_					
1	U932813000	PANEL POSTERIOR SUPER. 1,5 M	SUP REAR PANEL 1.5 M	_	_	1					
	Q419005000	REMACHE 4X8 ALMG3 / ALUMINIO	RIVET 4X8 ALMG3 / ALUMINIUM	4	4	4					
	X010503000	CIERRE MUELLE	LOCK SPRING	4	4	4					
	Q419007000	REMACHE TUBULAR C/V D3.2X6	TUBULAR RIVET C/V D3.2X6	8	8	8					
2	S565401000	EMBELLECEDOR POSTERIOR 1M	REAR TRIM 1M	1	1	_					
2	U915406000	EMBELLECEDOR CHIMENEA 1 1/2	FLUEPIPE TRIM 1 1/2	_	_	1					
3	U935408000	CAJON DE REFRACTARIOS(DCH)	REFRACTORY DRAWER (RIGHT)	1	1	1					
4	U935407000	MEDIA PLACA 1/2M G700	MEDIUM PLATE 1/2M G700	2	2	2					
5	U305403000	RODELA 1/2M CGF-700	GUIDE RING 1/2M CGF-700	1	1	1					
6	U915413000	PARRILLA DE MESA (G 700)	TABLE GRILL (G 700)	2	2	4					
7	U915407000	BACINETA QUEMADORES G 700	BASIN BURNERS G 700	1	1	2					
8	U935409000	LISTON SOP. QUEMA G700 (F)	BURNER SUP. STRUT G700 (F)	1	1	1					
9	U915408000	LISTON SOPORTE QUEMA G 700	BURNER SUPPORT STRUT G 700	1	1	2					
	Q221342000	REMACHE EXAGONAL M5	HEXAGONAL RIVET M5	4	4	8					
	Q152004000	TORNIL. APLASTADO M5X13 A 304	FLAT HEADED SCREW M5x13 A 3	4	4	8					
10	U915411000	MESA COCINA 1 M G 700	KITCHEN TABLE 1 M G 700	1	1	_					
10	U915405000	MESA COCINA 1 1/2M G 700	KITCHEN TABLE 1 1/2M G 700	_	_	1					
	Q012031000	TORNILLO EXAGONAL M5X10 A.304	HEXAGONAL BOLT M5X10 A.304	4	4	4					
11	H122802000	PANEL LATERAL SUP. DCHO. G700	RIGHT SUP. SIDE PANEL G700	1	1	1					
	Q221342000	REMACHE EXAGONAL M5	HEXAGONAL RIVET M5	6	6	6					
	Q221343000	REMACHE EXAGONAL M6	HEXAGONAL RIVET M6	5	5	5					SISTEMA PUENTE
12	H602603000	ESCUADRA AMARRE ANTER. 1 M	FRONT FASTENING BRACKET 1 I	1	1	_					
12	U912603000	ESCUADRA AMARRE ANTERI 1 1/2	FRONT FAST. BRACKET 1 1/2	_	_	1					
	Q221342000	REMACHE EXAGONAL M5	HEXAGONAL RIVET M5	6	6	6					
	Q012031000	TORNILLO EXAGONAL M5X10 A.304	HEXAGONAL BOLT M5X10 A.304	6	6	6					
13	H125409000	ANTERIOR MESA 1M G-700	FRONT BENCH 1M G-700	1	1	_					
13	U915402000	ANTERIOR MESA 1 1/2M G700	FRONT BENCH 1 1/2M G700	_	_	1					
	Q152004000	TORNIL. APLASTADO M5X13 A 304	FLAT HEADED SCREW M5x13 A 3	2	2	2					

MOD.	COCINAS	ZONA	MUEBLE	PLANO	C-2058

ITEM	CODIGO	DENOMINACION	TEXTO	CG7-30 I	CG7-30 D	CG7-50					NOTAS
14	H602816000	ZOCALO 7-10 Q	SKIRTING 7-10 Q	1	1	_					
14	U932817000	ZOCALO 7-50	SKIRTING 7-50	_	_	1					
	Q012031000	TORNILLO EXAGONAL M5X10 A.304	HEXAGONAL BOLT M5X10 A.304	2	2	3					
	Q302022000	ARANDELA 16X6X1.2 A.304	WASHER 16X6X1.2 A.304	2	2	3					
	Q162040000	TUERCA EXAGONAL M6	HEXAGONAL NUT M6	4	4	6					
	Q302022000	ARANDELA 16X6X1.2 A.304	WASHER 16X6X1.2 A.304	4	4	6					
15	U932810000	PANEL PORTAMANDOS CG7-30 I	CONTROL HOLDER PANEL CG7-	1	_	_					
15	U932821000	PANEL PORTAMANDOS CG7-30 D	CONTROL HOLDER PANEL CG7-	_	1	_					
15	U932815000	PANEL PORTAMANDOS CG7-50	CONTROL HOLDER PANEL CG7-	_	_	1					
	Q152004000	TORNIL. APLASTADO M5X13 A 304	FLAT HEADED SCREW M5x13 A 3	4	4	4					
	Q302022000	ARANDELA 16X6X1.2 A.304	WASHER 16X6X1.2 A.304	2	2	2					
	U912805000	ESCUDO FAGOR G700	FAGOR EMBLEM G700	1	1	1					
	Q221023000	CLIP SUJECIÓN RÁPIDA Ø5	RAPID CONNECT CLIP Ø5	2	2	2					
16	U902803000	BASE CG7-40 Q	BASE CG7-40 Q	1	1	_					
16	U932816000	BASE CG7-50	BASE CG7-50	_	_	1					
	Q419005000	REMACHE 4X8 ALMG3 / ALUMINIO	RIVET 4X8 ALMG3 / ALUMINIUM	4	4	4					
17	H122801000	PANEL LATERAL SUPERIOR IZDO.	LEFT UPPER SIDE PANEL	1	1	1					
	Q221342000	REMACHE EXAGONAL M5	HEXAGONAL RIVET M5	5	5	5					
	Q221343000	REMACHE EXAGONAL M6	HEXAGONAL RIVET M6	5	5	5					SISTEMA PUENTE
18	Z200107000	PATA REGULABLE	ADJUSTABLE LEG	4	4	4					
	Q221345000	REMACHE EXAGONAL M10	HEXAGONAL RIVET M10	4	4	4					

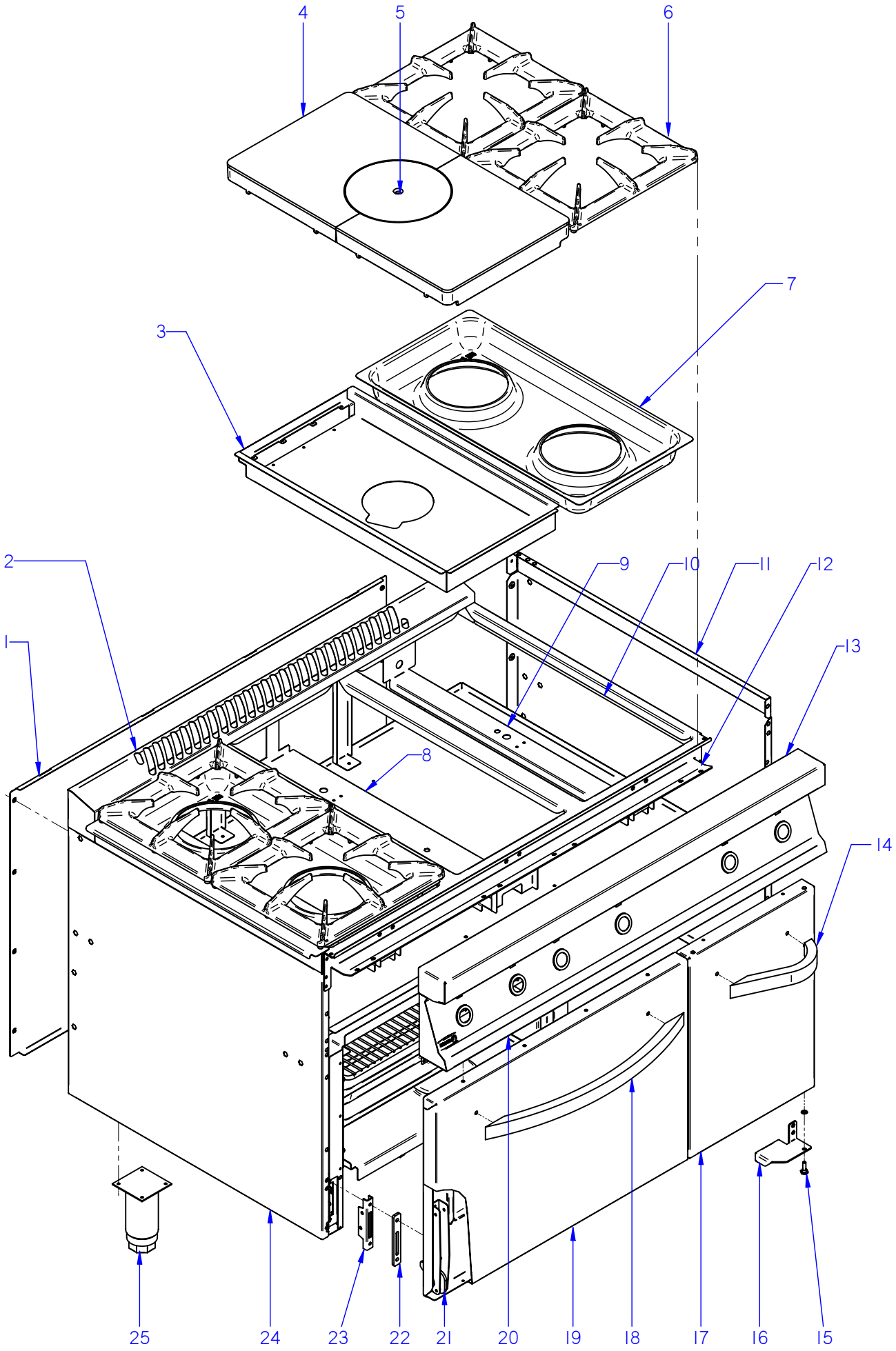

ITEM MARCADO EN COLOR = REPUESTO RECOMENDADO
COLOURED ITEM = RECOMMENDED SPARE PART

N plano	Firma	Fecha	Aparato	MUEBLE	Lamina	
C-2059		2008-05	COCINAS CG7-31; CG7-51		2	Fagor Industrial S.Coop. FAGOR Onate

MOD.	COCINAS	ZONA	MUEBLE	PLANO	C-2059

ITEM	CODIGO	DENOMINACION	TEXTO	CG7-31 I	CG7-31 D	CG7-51					NOTAS
1	S562805000	PANEL POSTERIOR G750	REAR PANEL G750	1	1	_					
1	U912809000	PANEL POSTERIOR 1 1/2M G 700	REAR PANEL 1 1/2M G 700	_	_	1					
	Q419005000	REMACHE 4X8 ALMG3 / ALUMINIO	RIVET 4X8 ALMG3 / ALUMINIUM	8	8	8					
2	S565401000	EMBELLECEDOR POSTERIOR 1M	REAR TRIM 1M	1	1	_					
2	U915406000	EMBELLE CHIMENEA 1 1/2 G 700	FLUE PIPE TRIM 1 1/2 G 700	_	_	1					
3	U935408000	CAJON DE REFRACTARIOS(DCH)	REFRACTORY DRAWER (RIGHT)	1	1	1					
4	U935407000	MEDIA PLACA 1/2M G700	MEDIUM PLATE 1/2M G700	2	2	2					
5	U305403000	RODELA 1/2M CGF-700	GUIDE RING 1/2M CGF-700	1	1	1					
6	U915413000	PARRILLA DE MESA (G 700)	TABLE GRILL (G 700)	2	2	4					
7	U915407000	BACINETA QUEMADORES G 700	BASIN BURNERS G 700	1	1	2					
8	U935409000	LISTON SOP. QUEMA G700 (F)	BURNER SUP. STRUT G700 (F)	1	1	1					
9	U915408000	LISTON SOPORTE QUEMA G 700	BURNER SUPPORT STRUT G 700	1	1	2					
	Q221342000	REMACHE EXAGONAL M5	HEXAGONAL RIVET M5	4	4	8					
	Q152004000	TORNIL. APLASTADO M5X13 A 304	FLAT HEADED SCREW M5x13 A 3	4	4	8					
10	U915411000	MESA COCINA 1 M G 700	KITCHEN TABLE 1 M G 700	1	1	_					
10	U915405000	MESA COCINA 1 1/2M G 700	KITCHEN TABLE 1 1/2M G 700	_	_	1					
	Q152004000	TORNIL. APLASTADO M5X13 A 304	FLAT HEADED SCREW M5x13 A 3	4	4	4					
11	U912802000	PANEL LATERAL DCHO. G700	RIGHT SIDE PANEL G700	1	1	1					
	Q221342000	REMACHE EXAGONAL M5	HEXAGONAL RIVET M5	4	4	4					
	Q221343000	REMACHE EXAGONAL M6	HEXAGONAL RIVET M6	4	4	4					
	Q221343000	REMACHE EXAGONAL M6	HEXAGONAL RIVET M6	7	7	7					SISTEMA PUENTE
	Q012043000	TORNILL. EXAGONAL M6X20 A.304	HEXAGONAL BOLT M6X10 A.304	2	2	2					
	Q302022000	ARANDELA 16X6X1.2 A.304	WASHER 16X6X1.2 A.304	2	2	2					
12	H602603000	ESCUADRA AMARRE ANTER. 1 M	FRONT FASTENING BRACKET 1 I	1	1	_					
12	U912603000	ESCUADRA AMARRE ANTERI 1 1/2	FRONT FAST. BRACKET 1 1/2	_	_	1					
	Q221342000	REMACHE EXAGONAL M5	HEXAGONAL RIVET M5	6	6	6					
	Q152004000	TORNIL. APLASTADO M5X13 A 304	FLAT HEADED SCREW M5x13 A 3	6	6	6					
13	H125409000	ANTERIOR MESA 1M G-700	FRONT BENCH 1M G-700	1	1	_					
13	U915402000	ANTERIOR MESA 1 1/2M G700	FRONT BENCH 1 1/2M G700	_	_	1					
	Q152004000	TORNIL. APLASTADO M5X13 A 304	FLAT HEADED SCREW M5x13 A 3	2	2	2					

MOD.	COCINAS	ZONA	MUEBLE	PLANO	C-2059

ITEM	CODIGO	DENOMINACION	TEXTO	CG7-31 I	CG7-31 D	CG7-51					NOTAS
14	U910506000	ASA ARMARIO COMPL G700	FULL CUPBOARD HANDLE G700	_	_	1					
	Q162040000	TUERCA EXAGONAL M6	HEXAGONAL NUT M6	_	_	2					
	Q232040000	ARANDELA A6	WASHER A6	_	_	2					
15	X960504000	TORNILLO DE GIRO M8	ROTATION BOLT M8	_	_	1					
	Q232040000	ARANDELA A6	WASHER A6	_	_	2					
	Q232050000	ARANDELA A8	WASHER A8	_	_	1					
16	U020511000	BISAGRA DERECHA INFERIOR	LOWER RIGHT HINGE	_	_	1					
17	U910503000	PUERTA LATERAL G700	SIDE DOOR G700	_	_	1					
	U910504000	CONTRAPUERTA LATERAL G 700	SIDE DOOR REVERSE G 700	_	_	1					
	X960501000	IMAN	MAGNET	_	_	2					
	X960502000	FIJACION IMAN	MAGNET ATTACHMENT	_	_	2					
	Q012021000	TORN.EXA. M4X10	HEX BOLT M4X10	_	_	2					
	Q232050000	ARANDELA A8	WASHER A8	_	_	2					
18	U020504000	ASA DE HORNO COMPL. G 900	COMPL. OVEN HANDLE G 900	1	1	1					
	Q302022000	ARANDELA 16X6X1.2 A.304	WASHER 16X6X1.2 A.304	2	2	2					
	Q012041000	TORNILLO EXAGONAL M6X10 A.304	HEXAGONAL BOLT M6X10 A.304	2	2	2					
	Q162040000	TUERCA EXAGONAL M6	HEXAGONAL NUT M6	2	2	2					
19	U910501000	PUERTA DE HORNO G700	OVEN DOOR G700	1	1	1					
	U910502000	CONTRAPUERTA HORNO G700	OVEN DOOR REVERSE G700	1	1	1					
	Q152004000	TORNIL. APLASTADO M5X13 A 304	FLAT HEADED SCREW M5x13 A 3	3	3	3					
	X160537000	TAPON PUERTAS	DOOR COVER	1	1	1					
20	U932812000	PORTAMANDOS COMPL CG-731 I	COMPL CONTROL HOLDER CG-7	1	_	_					
20	U932819000	PORTAMANDOS COMPL CG-731 D	COMPL CONTROL HOLDER CG-7	_	1	_					
20	U932808000	PORTAMANDOS COMPL CG-751	COMPL CONTROL HOLDER CG-7	_	_	1					
	Q152004000	TORNIL. APLASTADO M5X13 A 304	FLAT HEADED SCREW M5x13 A 3	4	4	4					
	U912805000	ESCUDO FAGOR G700	FAGOR EMBLEM G700	1	1	1					
	Q221023000	CLIP SUJECIÓN RÁPIDA Ø5	RAPID CONNECT CLIP Ø5	2	2	2					
21	U020528000	BISAGRA CIERRE HORNO	OVEN LOCK HINGE	2	2	2					
	Q152022000	TORNILLO M.6X8	BOLT M.6X8	6	6	6					
22	U915619000	EMBELLECEDOR GUIA BISAGRA	HINGE GUIDE TRIM	2	2	2					
	Q152045000	TORNILLO AMARRRE M6X25	FASTENING BOLT M6X25	4	4	4					

MOD.	COCINAS	ZONA	MUEBLE	PLANO	C-2059

ITEM	CODIGO	DENOMINACION	TEXTO	CG7-31 I	CG7-31 D	CG7-51					NOTAS
23	U010512000	GUIA BISAGRA HORNO	OVEN HINGE GUIDE	2	2	2					
24	U912801000	PANEL LATERAL IZDO. G700	LEFT SIDE PANEL G700	1	1	1					
	Q221342000	REMACHE EXAGONAL M5	HEXAGONAL RIVET M5	13	13	13					
	Q221343000	REMACHE EXAGONAL M6	HEXAGONAL RIVET M6	2	2	2					
	Q012043000	TORNILL. EXAGONAL M6X20 A.304	HEXAGONAL BOLT M6X10 A.304	2	2	2					
	Q302022000	ARANDELA 16X6X1.2 A.304	WASHER 16X6X1.2 A.304	2	2	2					
	Q221343000	REMACHE EXAGONAL M6	HEXAGONAL RIVET M6	7	7	7					SISTEMA PUENTE
25	X260151000	PATA REGULABLE	ADJUSTABLE LEG	4	4	4					
	Q411304000	REMACHE AVIBULB Ø 4,8	AVIBULB RIVET Ø 4.8	16	16	16					

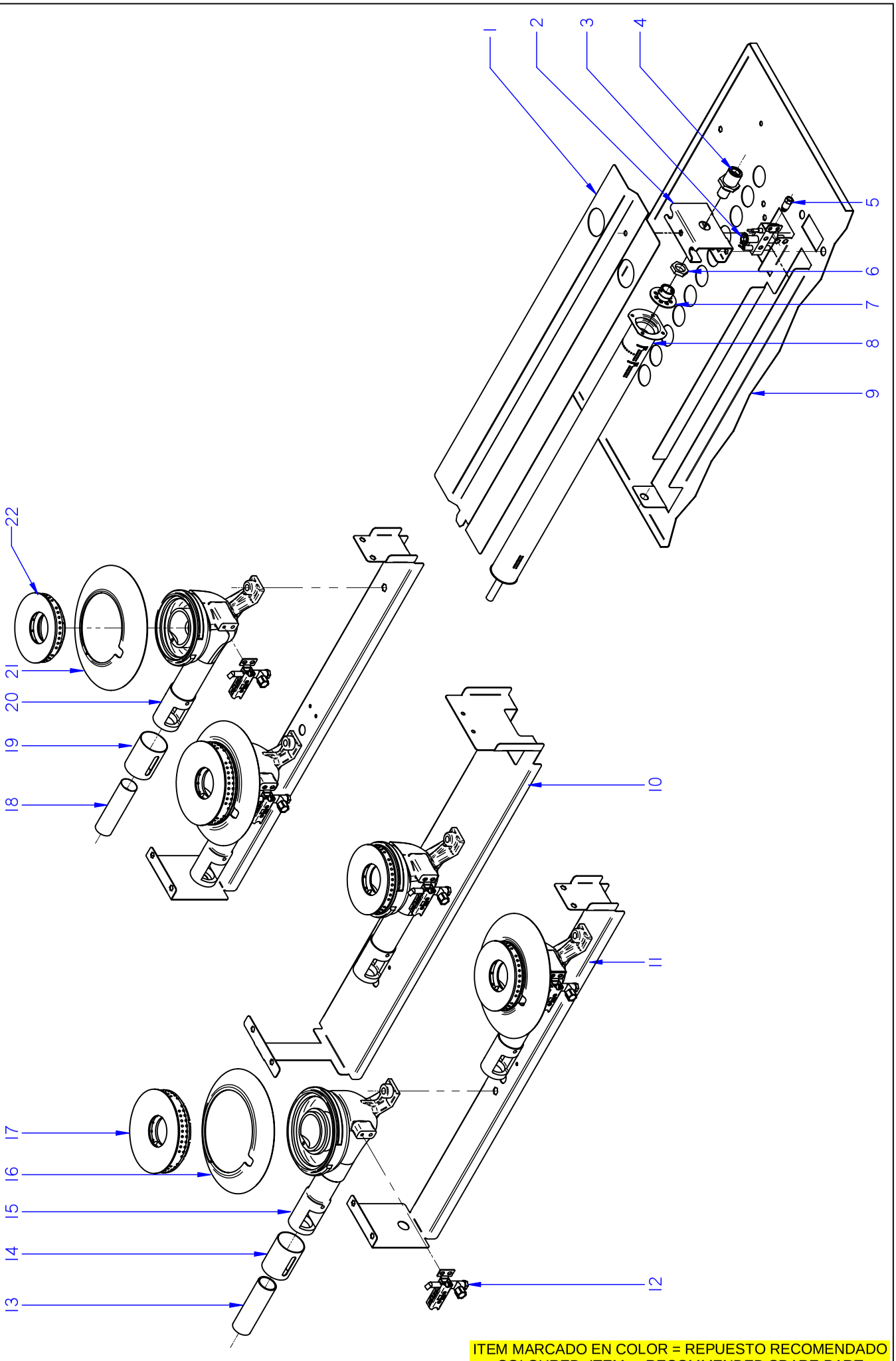

ITEM MARCADO EN COLOR = REPUESTO RECOMENDADO
COLOURED ITEM = RECOMMENDED SPARE PART

N plano	Firma	Fecha	Aparato		Lamina	
C-2060		2008-05	QUEMADORES COCINAS CG7-30 / 50 / 31 / 51		3	Fagor Industrial S.Coop. Oñate

MOD.	COCINAS	ZONA	QUEMADORES	PLANO	C-2060

ITEM	CODIGO	DENOMINACION	TEXTO	CG7-30	CG7-50	CG7-31	CG7-51				
1	U915613000	DEFLECTOR QUEMADOR HORNO	OVEN BURNER DEFLECTOR	_	_	1	1				
	Q152004000	TORNIL. APLASTADO M5X13 A 304	FLAT HEADED SCREW M5x13 A 3	_	_	1	1				
	Q302022000	ARANDELA 16X6X1.2 A.304	WASHER 16X6X1.2 A.304	_	_	1	1				
	Q221342000	REMACHE EXAGONAL M5	HEXAGONAL RIVET M5	_	_	1	1				
2	U105635000	AMARRE QUEMADOR HORNO(HG)	OVEN BURNER FASTENING (HG)	_	_	1	1				
	Q222041000	REMACHE EXAGONAL M4 (INOX)	HEXAGONAL RIVET M4 (INOX)	_	_	4	4				
	Q012031000	TORNILLO EXAGONAL M5X10 A304	HEXAGONAL BOLT M5x10 A304	_	_	2	2				
3	U322118000	PILOTO COMPLETO 100.062	COMPLETE PILOT LIGHT 100.062	_	_	1	1				
	U442137000	INYECTOR Ø 0.4 GN	INJECTOR Ø 0.4 GN.	_	_	1	1				
	Q012031000	TORNILLO EXAGONAL M5X10 A304	HEXAGONAL BOLT M5x10 A304	_	_	2	2				
4	X505724000	MANGUITO PORTATOBERAS	NOZZLE HOLDER SLEEVE	_	_	1	1				
5	U134323000	RACORD BICONO 6 958.031	BICONE CONNECTION 6 958.031	_	_	1	1				
6	Q223019000	TUERCA 3/8 GAS LATÓN	NUT 3/8 GAS BRASS	_	_	1	1				
7	X505013000	REGULADOR DE AIRE POLIDORO	POLIDORO AIR CONTROL	_	_	1	1				
	Q031322000	TORNILLO ALOMADO M4X15	CURVED SCREW M4X15	_	_	1	1				
8	U105701000	QUEMADOR HORNO COMPLETO	COMPLETE OVEN BURNER	_	_	1	1				
	R612400000	TOBERA DE Ø 1.35 B.P.	NOZZLE Ø 1.35 B.P.	_	_	1	1				
	9207500000	TOBERA DE Ø 2.05 G.N.	NOZZLE Ø 2.05 G.N.	_	_	1	1				
9	U915606000	BASE INTERIOR HORNO G700	OVEN INTERIOR BASE G700	_	_	1	1				
	Q152004000	TORNIL. APLASTADO M5X13 A304	FLAT HEADED BOLT M5x13 A304	_	_	4	4				
	Q221342000	REMACHE EXAGONAL M5	HEXAGONAL RIVET M5	_	_	2	2				
10	U935409000	LISTON SOP. QUEMA G700 (F)	BURNER SUP. STRUT G700 (F)	1	1	1	1				
11	U915408000	LISTON SOPORTE QUEMA G 700	BURNER SUPPORT STRUT G 700	1	2	1	2				
12	11U9121210	PILOTO COMPLETO	COMPLETE PILOT LIGHT	3	5	3	5				
S/Nº	X012126000	CUERPO SIN RACORD 901.210	BODY WITHOUT CONNECTION 9	3	5	3	5				SOLO EN VERSION BP
S/Nº	U442137000	INYECTOR Ø 0.4 GN	INJECTOR Ø 0.4 GN.	3	5	3	5				
S/Nº	U912107000	CABEZA PILOTO 1 LLAMA (G 700)	PILOT HEAD 1 FLAME (G 700)	3	5	3	5				
S/Nº	U442130000	AMARRE TRASERO PI 978.009	REAR FASTEN. PI 978.009	3	5	3	5				
S/Nº	X012116000	TORNILLO AMARRE 953.007	FASTENING BOLT 953.007	3	5	3	5				
S/Nº	X012122000	REGULADOR AIRE 912.001	AIR CONTROL 912.001	3	5	3	5				
S/Nº	U442131000	AMARRE DELANTERO PI 978.021	FRONT FASTENING PI 978.021	3	5	3	5				

MOD.	COCINAS	ZONA	QUEMADORES	PLANO	C-2060

ITEM	CODIGO	DENOMINACION	TEXTO	CG7-30	CG7-50	CG7-31	CG7-51				
S/Nº	U442136000	CUERPO SIN RACORD (INY. Ø 0.4)	BODY WITHOUT CONNECTION 9	3	5	3	5				SOLO EN VERSION GN
S/Nº	U442133000	RACORD BICONO 4 958.030	BICONE CONNECTION 4,958.030	3	5	3	5				ELIMINADO 11.06.08
13	U565700000	VENTURI QUEMADOR 8000	VENTURI BURNER 8000	1	2	1	2				
	R422400000	TOBERA DE Ø 1.25 B.P.	NOZZLE Ø 1.25 B.P.	1	2	1	2				
	U912401000	TOBERA DE Ø 1.95 G.N.	NOZZLE Ø 1.95 G.N.	1	2	1	2				
14	U265702000	REGULADOR AIRE	AIR CONTROLLER	1	2	1	2				
15	U915702000	CUERPO QUEMADOR 7000 Kcal/h	BURNER BODY 7000 Kcal/h	1	2	1	2				
	Q132054000	VARILLA ROSCADA M6 x 12	THREADED ROD M6 x 12	1	2	1	2				
	Q162040000	TUERCA EXAGONAL M6	HEXAGONAL NUT M6	1	2	1	2				
16	U915703000	PROTEC. PILOTO QUEMAD. 7000	BURNER PILOT GUARD 7000	1	2	1	2				
	Q012045000	TORNILLO EXAGONAL M6X30 A.304	HEXAGONAL BOLT M6X30 A.304	1	2	1	2				
	Q302022000	ARANDELA 16X6X1.2 A.304	WASHER 16X6X1.2 A.304	1	2	1	2				
17	U135702500	QUEMADOR 8000 MESA	BURNER 8000 BENCH	1	2	1	2				
	Q371026000	MANGUITO SUJEC. 4X14 DIN1481	HOSE FASTENING 4X14 ØIN1481	1	2	1	2				
	Q131511000	VARILLA ROSCADA M3x8 DIN 913	THREADED ROD M3x8 DIN 913	1	2	1	2				
18	U125720000	VENTURI QUEMADOR 4000 kcl	VENTURI BURNER 4000 kcl	2	3	2	3				
	X312400000	TOBERA DE Ø 1.10 B.P.	NOZZLE Ø 1.10 B.P.	2	3	2	3				ELIMINADO 24.09.09
	U122407000	TOBERA DE Ø 1.05 B.P.	NOZZLE Ø 1.05 B.P.	2	3	2	3				INTRODUCIDO 24.09.09
	R302400000	TOBERA DE Ø 1.65 G.N.	NOZZLE Ø 1.65 G.N.	2	3	2	3				
19	U265702000	REGULADOR AIRE	AIR CONTROLLER	2	3	2	3				
20	U915701000	CUERPO QUEMADOR 5000 Kcal/h	BURNER BODY 5000 Kcal/h	2	3	2	3				
	Q131542000	VARILLA ROSCADA M6 x 15	THREADED ROD M6 x 15	2	3	2	3				
	Q162040000	TUERCA EXAGONAL M6	HEXAGONAL NUT M6	2	3	2	3				
21	U915704000	PROTEC. PILOTO QUEMAD. 5000	BURNER PILOT GUARD 5000	1	2	1	2				
	Q012045000	TORNILLO EXAGONAL M6X30 A304	HEXAGONAL BOLT M6x30 A304	1	2	1	2				
	Q302022000	ARANDELA 16X6X1.2 A.304	WASHER 16X6X1.2 A.304	1	2	1	2				
22	U445731500	QUEMADOR 4000 (00545-010)	BURNER 4000 (00545-010)	2	3	2	3				ELIMINADO 25.09.09
22	U445731000	QUEMADOR 4000 (00545-010)	BURNER 4000 (00545-010)	2	3	2	3				INTRODUCIDO. 25.09.09
	Q371026000	MANGUITO SUJEC. 4X14 DIN1481	HOSE FASTENING 4X14 ØIN1481	2	3	2	3				
	Q131511000	VARILLA ROSCADA M3x8 DIN 913	THREADED ROD M3x8 DIN 913	2	3	2	3				

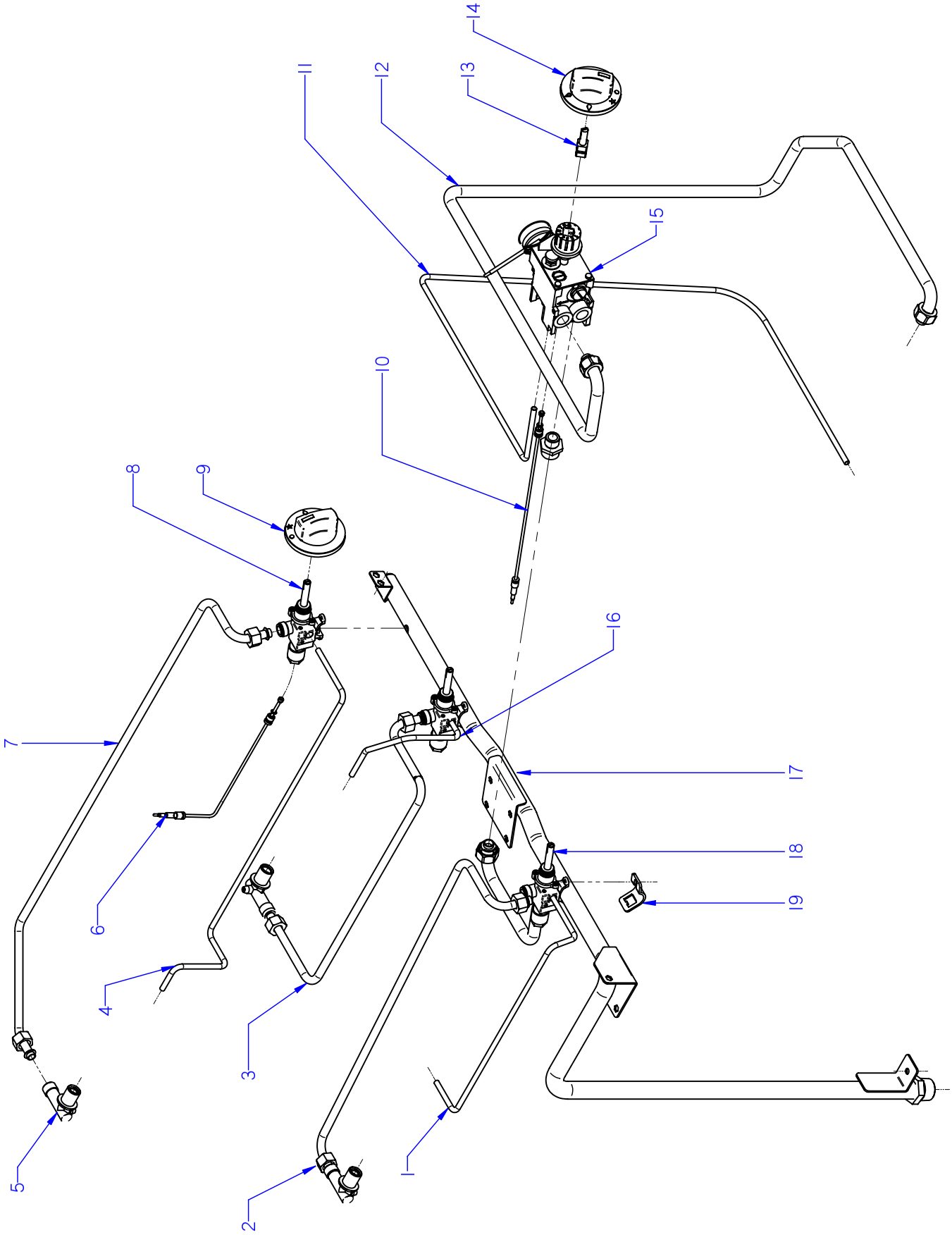

ITEM MARCADO EN COLOR = REPUESTO RECOMENDADO
COLOURED ITEM = RECOMMENDED SPARE PART

N plano	Firma	Fecha	Aparato		Lamina	
C-2061		2008-05	CONDUCCIONES Y GRIFOS COCINAS CG7-30; CG7-31		4	Fagor Industrial S.Coop. Oñate

MOD.	COCINAS	ZONA	CONDUCCIONES Y GRIFOS	PLANO	C-2061

ITEM	CODIGO	DENOMINACION	TEXTO	CG7-30 I	CG7-30 D	CG7-31 I	CG7-31 D				NOTAS
1	U935024000	TUBO PILOTO POSTERIOR DCHO.	RIGHT REAR PILOT PIPE	1	1	1	1				
	U134323000	RACORD BICONO 6 958.031	BICONE CONNECTION 6 958.031	2	2	2	2				
2	U935023000	CONDUCCION A QUEMADOR	PIPING TO BURNER	1	1	1	1				
	Q306062000	ARANDELA Ø13,9X10,33x1,5	WASHER Ø13.9X10.33x1.5	2	2	2	2				
3	U915025000	TUBO ANTERIOR CENTRAL G700	CENTRAL FRONT PIPE G700	1	1	1	1				
	Q306062000	ARANDELA Ø13,9X10,33x1,5	WASHER Ø13.9X10.33x1.5	2	2	2	2				
4	U915029000	TUBO PILOTO POSTER. CENTRAL	REAR PILOT PIPE CENTRAL	1	1	1	1				
	U134323000	RACORD BICONO 6 958.031	BICONE CONNECTION 6 958.031	2	2	2	2				
5	U915014000	PORTATOBERAS HORNO	OVEN NOZZLE HOLDER	3	3	3	3				
	Q153002000	TORNILLO TAPON	CAP BOLT	3	3	3	3				
6	U222130000	TERMOPAR L=600	THERMOCOUPLE L=600	3	3	3	3				
7	U915027000	TUBO POSTERIOR CENTRAL G700	CENTRAL REAR PIPE G700	1	1	1	1				
	Q306062000	ARANDELA Ø13,9X10,33x1,5	WASHER Ø13.9X10.33x1.5	2	2	2	2				
8	U912101000	GRIFO VALVULA CPMM18700/821	VALVE TAP CPMM18700/821	2	2	2	2				
9	H122101000	BOTON DE MANDO Ø8 G700	CONTROL BUTTON Ø8 G700	3	3	3	3				
10	U742131000	TERMOPAR L=1500 M9	THERMOCOUPLE L=1500 M9	_	_	1	1				
11	U915008000	TUBO PILOTO HORNO G 700	OVEN PILOT PIPE G 700	_	_	1	1				
	U134323000	RACORD BICONO 6 958.031	BICONE CONNECTION 6 958.031	_	_	2	2				
12	U915005000	TUBO EUROSIT A HORNO COMPL	EUROSIT PIPE TO COMPL OVEN	_	_	1	1				
	Q306062000	ARANDELA Ø13,9X10,33x1,5	WASHER Ø13.9X10.33x1.5	_	_	2	2				
13	R062101000	EJE BOTON DE MANDO EUROSIT	CONTROL BUTTON SHAFT EURO	_	_	1	1				
	Q131560000	VARILLA ROSCADA M4x8 DIN913	THREADED ROD M4x8 DIN913	_	_	1	1				
14	U912105000	BOTON DE MANDO Ø 8 EUROSIT	CONTROL BUTTON Ø 8 EUROSI	_	_	1	1				
15	T982100000	VALVULA 630 EUR 630.343	VALVE 630 EUR 630.343	_	_	1	1				
	T982102000	TAPON 3/8 972.061	CAP 3/8 972.061	_	_	2	2				
	U875017000	MANGUITO R 3/8"-R1/2"	HOSE R 3/8"-R1/2"	_	_	2	2				
	Q306058000	ARANDELA Ø23,5X17,60X1,5	WASHER Ø23.5X17.60X1.5	_	_	2	2				
16	U915009000	TUBO PILOTO ANTERIOR CENTR.	CENTRAL FRONT PILOT PIPE	1	1	1	1				
	U134323000	RACORD BICONO 6 958.031	BICONE CONNECTION 6 958.031	2	2	2	2				

MOD.	COCINAS	ZONA	CONDUCCIONES Y GRIFOS	PLANO	C-2061

ITEM	CODIGO	DENOMINACION	TEXTO	CG7-30 I	CG7-30 D	CG7-31 I	CG7-31 D				NOTAS
17	U935028000	CONDUCCION GENER. 1 M G730I	GENER. PIPING 1 M G730I	1	_	_	_				
17	U935036000	CONDUCCION GENER. 1 M G730D	GENER. PIPING 1 M G730D	_	1	_	_				
17	U935030000	DISTRIBUCION COMPL. 1 M G731I	COMPL. DISTRIBUTION 1 M G731	_	_	1	_				
17	U935034000	DISTRIBUCION COMPL. 1 M G731D	COMPL. DISTRIBUTION 1 M G731	_	_	_	1				
	U635008000	TUERCA CIEGA 3/4	BLIND NUT 3/4	1	1	_	_				
	Q306051000	ARANDELA TAPON Ø 23,5X3	CAP WASHER Ø 23.5x3	1	1	_	_				
	Q152004000	TORNIL. APLASTADO M5X13 A 304	FLAT HEADED SCREW M5x13 A 3	4	4	2	2				
	Q221321000	REMACHE ROSCAD. NUTSERT M6	THREADED RIVET NUTSERT M6	_	_	2	2				
	Q221342000	REMACHE EXAGONAL M5	HEXAGONAL RIVET M5	_	_	2	2				
	Q012043000	TORNILLO EXAGONAL M6X20 A304	HEXAGONAL BOLT M6x20 A304	_	_	1	1				
	Q302022000	ARANDELA Ø16X6X1.2 A.304	WASHER 16X6X1.2 A.304	_	_	1	1				
18	U912109000	GRIFO 18700 BY-PASS 1,15	TAP 18700 BY-PASS 1.15	1	1	1	1				
19	U912104000	BRIDA AMARRE GRIFO 1/2"	TAP FASTENING FLANGE 1/2"	3	3	3	3				
	Q122032000	TORNILLO ALLEN M.5x15	ALLEN HEAD SCREW M.5x15	3	3	3	3				

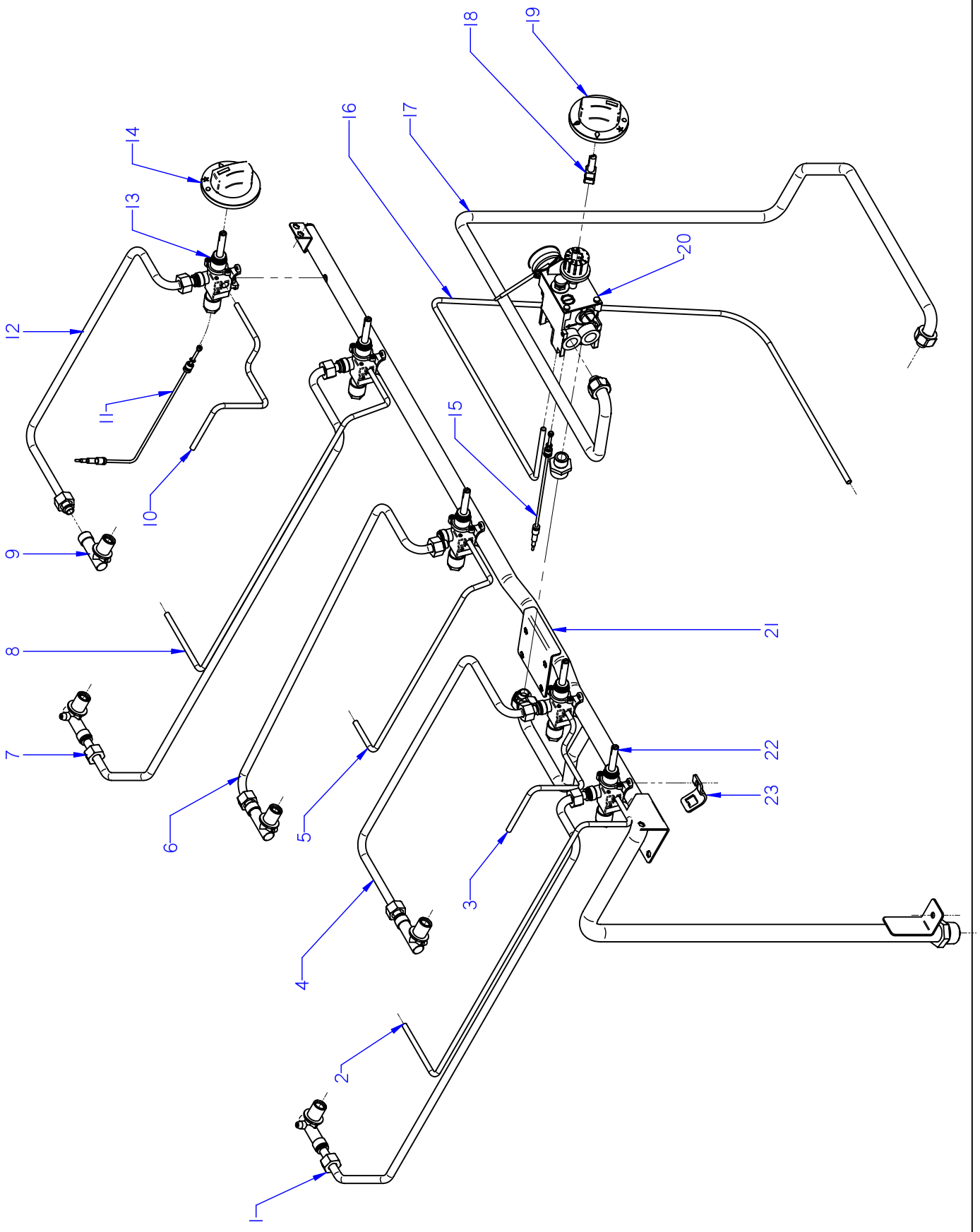

ITEM MARCADO EN COLOR = REPUESTO RECOMENDADO
COLOURED ITEM = RECOMMENDED SPARE PART

N plano	Firma	Fecha	Aparato	Lamina	
C-2062		2008-05	CONDUCCIONES Y GRIFOS COCINAS CG7-50; CG7-51	5	Fagor Industrial S.Coop. Oñate

MOD.	COCINAS	ZONA	CONDUCCIONES Y GRIFOS	PLANO	C-2062

ITEM	CODIGO	DENOMINACION	TEXTO	CG7-50	CG7-51						NOTAS
1	U915010000	TUBO POSTERIOR IZQUIER. G700	LEFT REAR PIPE G700	1	1						
	Q306062000	ARANDELA Ø13,9X10,33x1,5	WASHER Ø13.9X10.33x1.5	2	2						
2	U915021000	TUBO PILOTO POSTERIOR IZDO.	LEFT REAR PILOT PIPE	1	1						
	U134323000	RACORD BICONO 6 958.031	BICONE CONNECTION 6 958.031	2	2						
3	U915022000	TUBO PILOTO ANTERIOR IZD G700	LEFT FRONT PILOT PIPE G700	1	1						
	U134323000	RACORD BICONO 6 958.031	BICONE CONNECTION 6 958.031	2	2						
4	U915016000	TUBO ANTERIOR IZQUIERDO G700	LEFT FRONT PIPE G700	1	1						
	Q306062000	ARANDELA Ø13,9X10,33x1,5	WASHER Ø13.9X10.33x1.5	2	2						
5	U935024000	TUBO PILOTO POSTERIOR DCHO.	RIGHT REAR PILOT PIPE	1	1						
	U134323000	RACORD BICONO 6 958.031	BICONE CONNECTION 6 958.031	2	2						
6	U935023000	CONDUCCION A QUEMADOR	PIPING TO BURNER	1	1						
	Q306062000	ARANDELA Ø13,9X10,33x1,5	WASHER Ø13.9X10.33x1.5	2	2						
7	U915017000	TUBO POSTERIOR DCHO G700	RIGHT REAR PIPE G700	1	1						
	Q306062000	ARANDELA Ø13,9X10,33x1,5	WASHER Ø13.9X10.33x1.5	2	2						
8	U915023000	TUBO PILOTO POSTERIOR DCHO.	RIGHT REAR PILOT PIPE	1	1						
	U134323000	RACORD BICONO 6 958.031	BICONE CONNECTION 6 958.031	2	2						
9	U915014000	PORTATOBERAS HORNO	OVEN NOZZLE HOLDER	5	5						
	Q153002000	TORNILLO TAPON	CAP BOLT	5	5						
10	U915024000	TUBO PILOTO ANTERIOR DCHO	RIGHT FRONT PILOT PIPE	1	1						
	U134323000	RACORD BICONO 6 958.031	BICONE CONNECTION 6 958.031	2	2						
11	U222130000	TERMOPAR L=600	THERMOCOUPLE L=600	5	5						
12	U915019000	TUBO ANTERIOR DERECHO G700	RIGHT FRONT PIPE G700	1	1						
	Q306062000	ARANDELA Ø13,9X10,33x1,5	WASHER Ø13.9X10.33x1.5	2	2						
13	U912101000	GRIFO VALVULA CPMM18700/821	VALVE TAP CPMM18700/821	3	3						
14	H122101000	BOTON DE MANDO Ø8 G700	CONTROL BUTTON Ø8 G700	5	5						
15	U742131000	TERMOPAR L=1500 M9	THERMOCOUPLE L=1500 M9	_	1						
16	U915008000	TUBO PILOTO HORNO G 700	OVEN PILOT PIPE G 700	_	1						
	U134323000	RACORD BICONO 6 958.031	BICONE CONNECTION 6 958.031	_	2						
17	U915005000	TUBO EUROSIT A HORNO COMPL	EUROSIT PIPE TO COMPL OVEN	_	1						
	Q306062000	ARANDELA Ø13,9X10,33x1,5	WASHER Ø13.9X10.33x1.5	_	2						

MOD.	COCINAS	ZONA	CONDUCCIONES Y GRIFOS	PLANO	C-2062

ITEM	CODIGO	DENOMINACION	TEXTO	CG7-50	CG7-51						NOTAS
18	R062101000	EJE BOTON DE MANDO EUROSIT	CONTROL BUTTON SHAFT EURO	_	1						
	Q131560000	VARILLA ROSCADA M4x8 DIN913	THREADED ROD M4x8 DIN913	_	1						
19	U912105000	BOTON DE MANDO Ø 8 EUROSIT	CONTROL BUTTON Ø 8 EUROSI	_	1						
20	T982100000	VALVULA 630 EUR 630.343	VALVE 630 EUR 630.343	_	1						
	T982102000	TAPON 3/8 972.061	CAP 3/8 972.061	_	2						
	U875017000	MANGUITO R 3/8"-R1/2"	HOSE R 3/8"-R1/2"	_	2						
	Q306058000	ARANDELA Ø23,5X17,60X1,5	WASHER Ø23.5X17.60X1.5	_	2						
21	U935032000	CONDUCCION GENER. 1,5 M G750	GENER. PIPING 1.5 M G750	1	_						
21	U935025000	DISTRIBUCION COMPL. 1,5 M G751	COMPL. DISTRIBUTION 1.5 M G7	_	1						
	U635008000	TUERCA CIEGA 3/4	BLIND NUT 3/4	1	_						
	Q306051000	ARANDELA TAPON Ø 23,5X3	CAP WASHER Ø 23.5x3	1	_						
	Q221342000	REMACHE EXAGONAL M5	HEXAGONAL RIVET M5	2	2						
	Q152004000	TORNIL. APLASTADO M5X13 A 304	FLAT HEADED SCREW M5x13 A 3	2	2						
	Q221321000	REMACHE ROSCAD. NUTSERT M6	THREADED RIVET NUTSERT M6	_	2						
	Q012043000	TORNILLO EXAGONAL M6X20 A304	HEXAGONAL BOLT M6x20 A304	_	1						
	Q302022000	ARANDELA Ø16X6X1.2 A.304	WASHER 16X6X1.2 A.304	_	1						
22	U912109000	GRIFO 18700 BY-PASS 1,15	TAP 18700 BY-PASS 1.15	2	2						
23	U912104000	BRIDA AMARRE GRIFO 1/2"	TAP FASTENING FLANGE 1/2"	5	5						
	Q122032000	TORNILLO ALLEN M.5x15	ALLEN HEAD SCREW M.5x15	5	5						

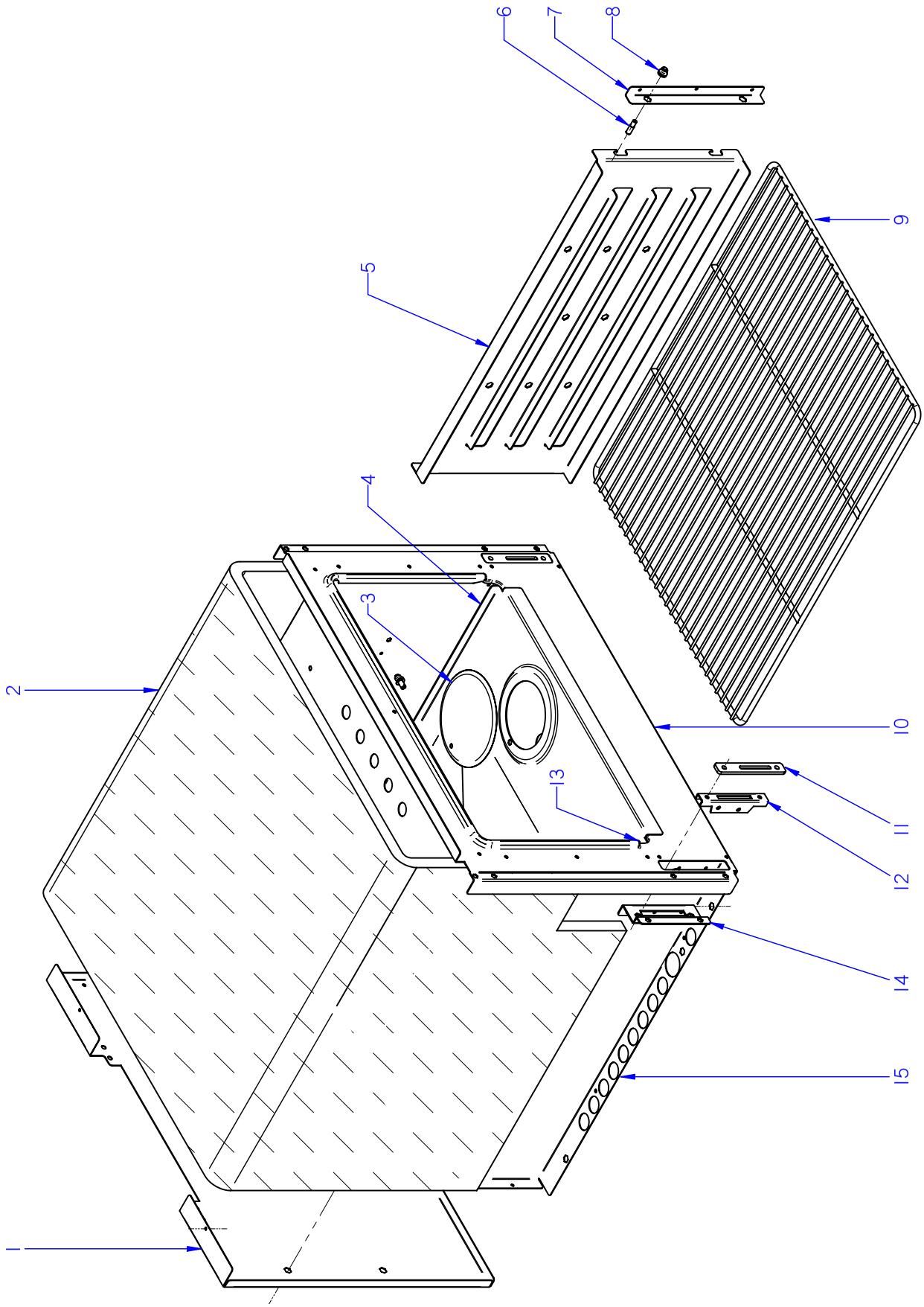

ITEM MARCADO EN COLOR = REPUESTO RECOMENDADO
COLOURED ITEM = RECOMMENDED SPARE PART

N plano	Firma	Fecha	Aparato		Lamina	
C-2063		2008-05	HORNO	COCINAS CG7-31; CG7-51	5	Fagor Industrial S.Coop. Oñate FAGOR

MOD.	COCINAS	ZONA	HORNO	PLANO	C-2063

ITEM	CODIGO	DENOMINACION	TEXTO	CG7-31	CG7-51						NOTAS
1	U915603000	POSTERIOR DE HORNO G700	OVEN REAR G700	1	1						
	Q412000000	REMACHE TUBULAR 4 x 8	TUBULAR RIVET 4 x 8	12	12						
2	U325621000	AISLANTE 1455x670x20-AL1C	INSULATION 1455x670x20-AL1C	1	1						
3	U915618000	TAPILLA DE SOLERA G 700	BASE COVER G 700	1	1						
	Q101534000	TORNILLO EXAGON. M5x25 DIN931	HEXAGONAL BOLT. M5x25 DIN93	1	1						
4	U915617000	SOLERA DE HORNO G 700	OVEN BASE G 700	1	1						
	Q221342000	REMACHE EXAGONAL M5	HEXAGONAL RIVET M5	1	1						
5	U915607000	GUIA LATERAL HORNO G700	OVEN SIDE GUIDE G700	2	2						
6	Q151336000	TORNILLO SOPORTE GUIAS	GUIDE SUPPORT BOLT	4	4						
	Q302022000	ARANDELA 16X6X1.2 A.304	WASHER 16X6X1.2 A.304	4	4						
7	U915616000	SUPLEM. AMARRE GUIA LATERAL	SUPP. FASTENING SIDE GUIDE	2	2						
8	Q221343000	REMACHE EXAGONAL M6	HEXAGONAL RIVET M6	4	4						
9	U135642000	PARRILLA DE HORNO	OVEN TRAY	1	1						
10	U915601000	MARCO DE HORNO G700	OVEN FRAME G700	1	1						
	Q221304000	REMACHE ROSCA NUTSERT M5	THREADED RIVET NUTSERT M5	2	2						
11	U915619000	EMBELLECEDOR GUIA BISAGRA	HINGE GUIDE TRIM	2	2						
	Q152045000	TORNILLO AMARRRE M6X25	FASTENING BOLT M6X25	4	4						
12	U010512000	GUIA BISAGRA HORNO	OVEN HINGE GUIDE	2	2						
13	U025623000	JUNTA PUERTA HORNO INOX.	OVEN DOOR SEAL INOX.	1	1						
14	U915604000	AMARRE GUIA BISAGRA HORNO	OVEN HINGE GUIDE FASTENING	2	2						
	Q412000000	REMACHE TUBULAR 4 x 8	TUBULAR RIVET 4 x 8	6	6						
	Q222042000	REMACHE EXAGONAL ROSCA M6	HEXAGONAL RIVET THREAD M6	4	4						
15	U915602000	CUERPO DE HORNO G700	OVEN BODY G700	1	1						
	Q221321000	REMACHE ROSCAD.NUTSERT.M6	THREADED RIVET .NUTSERT.M6	1	1						
	Q412000000	REMACHE TUBULAR 4 x 8	TUBULAR RIVET 4 x 8	8	8						

MOD.	COCINAS	ZONA	VARIOS	PLANO	

ITEM	CODIGO	DENOMINACION	TEXTO	CG7-30 I	CG7-30 D	CG7-50	CG7-31 I	CG7-31 D	CG7-51		NOTAS
	U746511000	FOLLETO INSTRUCCIONES CG700	INSTRUCTION LEAFLET CG700	1	1	1	1	1	1		ELIMINADO 17.12.08
	U916501000	FOLLETO INSTRUCCIONES CG700	INSTRUCTION LEAFLET CG700	1	1	1	1	1	1		INTRODUCIDO 17.12.08