SIMAG

Electronic flaker

SPR 80
SPR 120
SPR 165

R 134A-R 404A "K" SERIES

SPARE PARTS LIST
CATALOGO RICAMBI
CATALOGUE PIÈCES DÉTACHÉES
ERSATZTEILENKATALOG

REV. 02/2015

PAGE PAGINA PAGE SEITE	TABLE OF CONTENTS	INDICE	TABLE DES MATIÉRES	INHALTVERZEICHNIS
1	TABLE OF CONTENTS	INDICE	TABLE DES MATIÉRES	INHALTVERZEICHNIS
2-3	SPR 80 - UNIT PANELS	SPR 80 - ASSIEME MOBILE	SPR 80 - ENS. CARROSSERIE	SPR 80 - MACHINENGEHAUSE
4-5	SPR 120-165 - UNIT PANELS	SPR 120-165 - ASSIEME MOBILE	SPR 120-165 - ENS. CARROSSERIE	SPR 120-165 - MACHINENGEHAUSE
6-7	REFRIGERANT SYSTEM AIR COOLED	SISTEMA REFRIGERANTE RAFFR. AD ARIA	CIRCUIT FRIGORIFIQUE REFROID. A AIR	GEFRIERSYSTEM LUFTGEKÜHLT
8-9	REFRIGERANT SYSTEM WATER COOLED	SISTEMA REFRIGERANTE RAFFR. AD ACQUA	CIRCUIT FRIGORIFIQUE REFROID. A EAU	GEFRIERSYSTEM WASSERGEKÜHLT
10-11	WATER SYSTEM AND INSULATIONS	CIRCUITO IDRAULICO ED ISOLAMENTI	CIRCUIT HYDRAULIQUE ET INSULATIONS	WASSERKREISLAUF UND ISOLIERUNGEN
12-13	FREEZER AND GEAR REDUCER ASSY	ASSIEME FREEZER E RIDUTTORE	ENS. FREEZER ET MOTOREDUCTEUR	GEFRIERZYLINDER-GETRIEBEEINHEIT
14-19	P.C. BOARD AND SENSORS ASSY	SCHEDA ELETTRONICA E SENSORI	ENS. CARTE ELECTRONIQUE ET DETECTEURS	ELEKTRONISCHE KARTE UND TEMPERRATURFUEHLERENHEIT
16	COMPRESSOR AND ELECTRIC COMPONENT CHARTS	TABELLA COMPRESSORI E COMPONENTI ELETTRICI	LISTE DES COMPRESSEURS ET COMPOSANTS ELECTRIQUE	KOMPRESSOR UND ELEKTRISCHE BESTANDTEILE

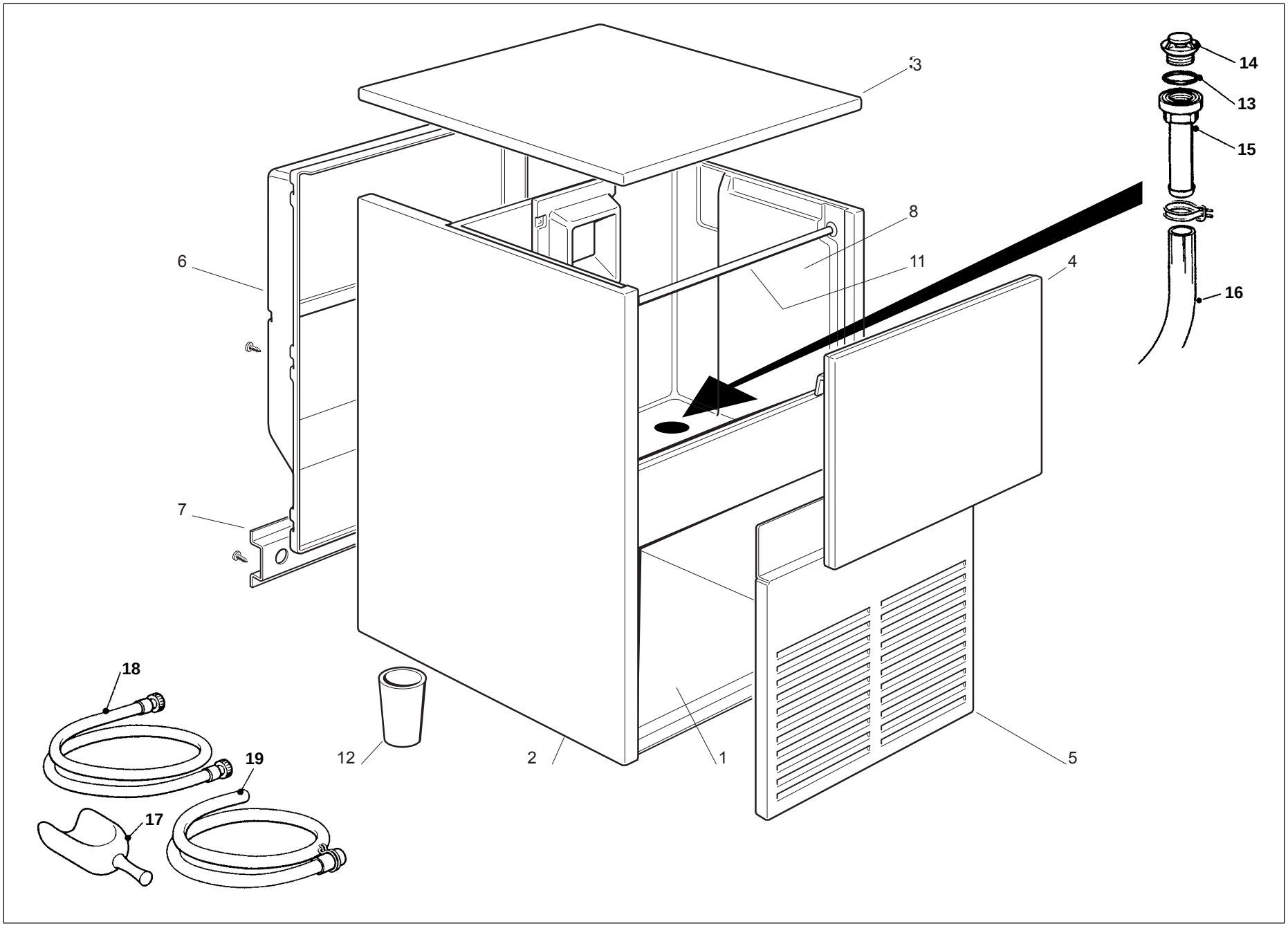
3
14
13
15
8
6
11
4
16
7
18
19
17
12
2
1
5

SPR 80 - UNIT PANELS - ASSIEME MOBILE - ENS. CARROSSERIE - MACHINE GEHAUSE

ITEM NO POS. NO REP. NO REF. NO	PART NO CODICE REFERENCE STUECK NR	DESCRIPTION	DESCRIZIONE	DESIGNATION	BESCHREIBUNG
1	781406 06	UNIT BASE	ASSIEME BASAMENTO	ENSAMBLE BASEMENT	GEHÄUSE
2	721754 03	LEFT SIDE PANEL	PANNELLO LATERALE SX	PANNEAU LAT. GAUCHE	LINKE WAND
	721753 03	RIGHT SIDE PANEL	PANNELLO LATERALE DX	PANNEAU LAT. DROITE	RECHTE WAND
3	721751 01	TOP PANEL	PANNELLO SUPERIORE	PANNEAU SUPERIEURE	ABDECKHAUBE
4	782092 03R	BIN DOOR ASSY	ASSIEME SPORTELLO	ENSAMBLE PORTE CABINE	SPEICHERTUER
5	781424 03R*	FRONT PANEL	PANNELLO FRONTALE	PANNEAU AVANT	VORDERWAND
	722410 00#	FRONT PANEL	PANNELLO FRONTALE	PANNEAU AVANT	VORDERWAND
6	660668 00	REAR PANEL	PANNELLO POSTERIORE	PANNEAU ARRIERE	RUECKWAND
7	702248 00	METAL BRACKET FOR FITTINGS	SUPPORTO ATTACCHI	SUPPORT DE RACCORDS	METALLTRAEGER
8	792042 00R	STORAGE BIN	CONTENITORE GHIACCIO	CABINE STOCKAGE	SPEICHER
11	732016 09	BIN DOOR BRACKET	PERNO SPORTELLO	PIVOT PORTE CABINE	SPEICHERT¨URSTIFT
12	660638 00 β	LEG	PIEDE	PIED	FUSS
	651469 00 α	LEG	PIEDE	PIED	FUSS
13	640134 00	O-RING	O-RING	JOINT TORIQUE	SIMMER RING
14	660211 01	DRAIN FILTER	FILTRO SCARICO CELLA	FILTRE CABINE STOCKAGE	BEHÄLTER ABLAUF FILTER
15	660219 01	DRAIN FITTING	SCARICO CELLA	TUYAU EVACUATION	ABFLUSSROHR
16	610148 04	STORAGE BIN DRAIN TUBE	TUBO SCARICO CONTENITORE	TUYAU VIDANGE CONTENEUR	BEHÄLTERAUSLAUFSCHLAUCH
17	650071 00	ICE SCOOP	SESSOLA	SASSE	EISSCHAUFEL
18	060513 00	KIT WATER SUPPLY PIPE	KIT TUBO ALIM. ACQUA	KIT TUYAU D'ALIM. EAU	WASSER ANSCHLUSSCHLAUCH
19	060513 01	KIT WATER DRAIN PIPE	KIT TUBO SCARICO ACQUA	KIT TUYAU VIDANGE EAU	WASSER SLAUFSCHLAUCH
	650976 00	SIMAG LOGO	TARGHETTA SIMAG	EMBLEME SIMAG	SIMAG ABGEBILDET
	650989 13	SPR 80 LOGO	TARGHETTA SPR 80	EMBLEME SPR 80	SPR 80 ABGEBILDET
		* UP TO SPR 80 S.N. 5258 # FROM SPR 80 S.N. 5259 β UP TO SPR 80 S.N. 7119 α FROM SPR 80 S.N. 7120	* FINO A SPR 80 S.N. 5258 # DAL SPR 80 S.N. 52595 β FINO A SPR 80 S.N. 7119 α DAL SPR 80 S.N. 7120	* JUSQ'Á SPR 80 S.N. 5258 * A PARTIR DU SPR 80 S.N. 5259 β JUSQ'Á SPR 80 S.N. 7119 α A PARTIR DU SPR 80 S.N. 7120	* BIS SPR 80 S.N. 5258 * VON SPR 80 S.N. 5259 β BIS SPR 80 S.N. 7119 α VON SPR 80 S.N. 7120

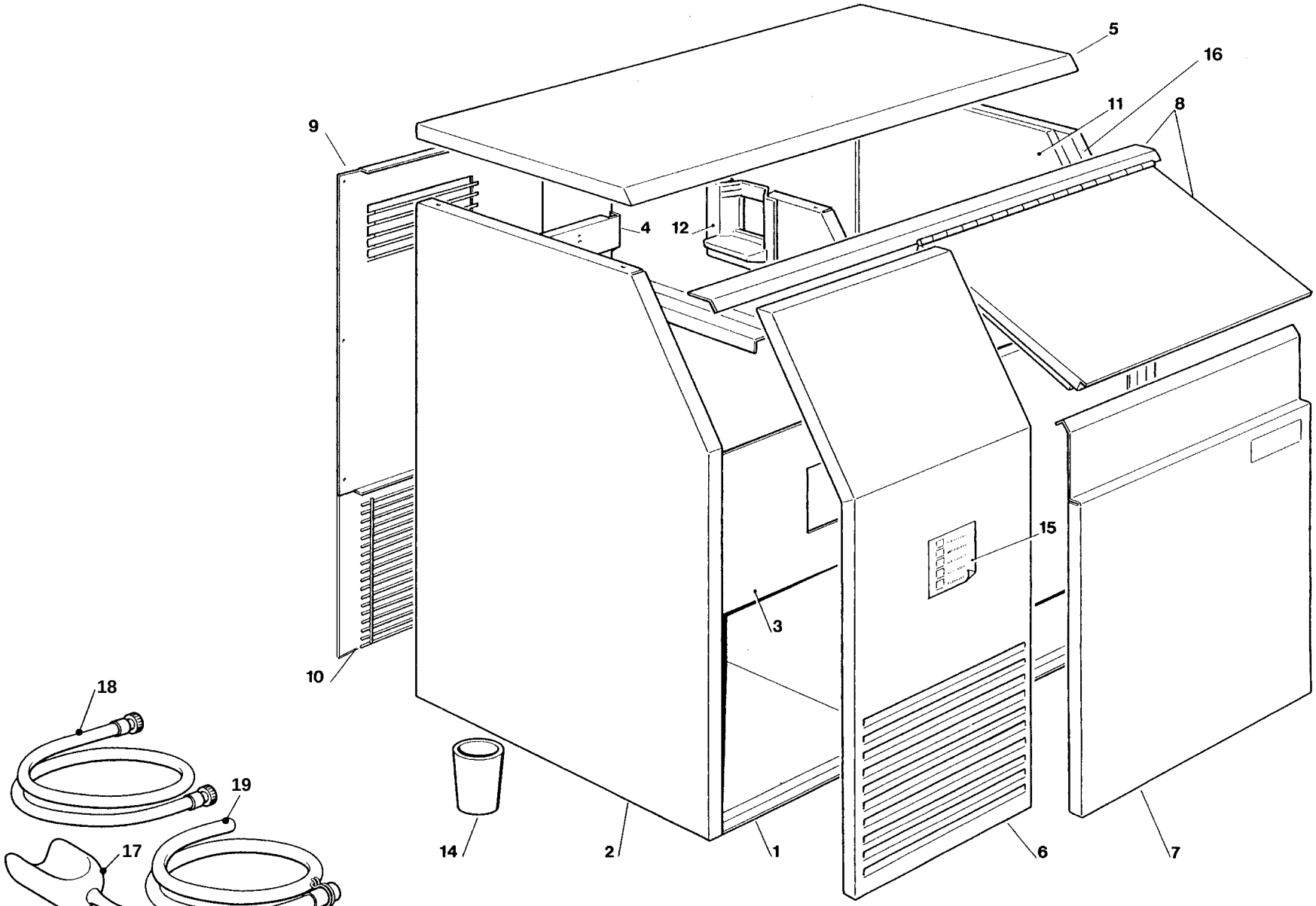
5
16
11
8
9
4
12
15
3
10
18
19
17
14
2
1
6
7

SPR 120 - SPR 165 - UNIT PANELS - ASSIEME MOBILE - ENS. CARROSSERIE - MACHINE GEHAUSE

ITEM NO POS NO REP. NO REF. NO	PART NO CODICE REFERENCE STUECK NR **SPR 120** / **SPR 165**	DESCRIPTION	DESCRIZIONE	DESIGNATION	BESCHREIBUNG
1	784410 07	UNIT BASE	ASSIEME BASAMENTO	ENSAMBLE BASEMENT	GEHÄUSE
2	721874 00	LEFT SIDE PANEL	PANNELLO LATERALE SX	PANNEAU LAT. GAUCHE	LINKE WAND
3	702346 00	FRONT METAL BRACKET	TELAIO FRONTALE	SUPPORT CARTE ELECTRONIQUE	FRONTGEHÄUSE
4	704281 06	WATER RESERVOIR BRACKET	SUPPORTO VASCHETTA	SUPPORT RESERVOIR EAU	BECKEN TRÄGER
5	721877 00	TOP PANEL	PANNELLO SUPERIORE	PANNEAU SUPERIEURE	ABDECKHAUBE
6	721876 00	LEFT FRONT PANEL	PANNELLO FRONTALE SX	PANNEAU AVANT GAUCHE	LINKE VORDERWAND
7	721875 00	RIGHT FRONT PANEL	PANNELLO FRONTALE DX	PANNEAU AVANT DROITE	RECHEVORDERWAND
8	782085 01	BIN DOOR	ASSIEME SPORTELLO	ENSAMBLE PORTE CABINE	SPEICHERKLAPPE + RAHMEN
9	702348 00	RIGHT REAR PANEL	PANNELLO POSTERIORE DX	PANNEAU ARRIERE DROITE	RÜCKWAND RECHTS
10	702349 00	LEFT REAR PANEL	PANNELLO POSTERIORE SX	PANNEAU ARRIERE GAUCHE	RÜCKWAND LINKS
11	660565 00	STORAGE BIN	CONTENITORE GHIACCIO	CABINE STOCKAGE	SPEICHER
12	660297 03	RUBBER SPOUT	BOCCHETTA IN GOMMA	CARTER GOULOTTE SORTIE GLACE	GUMMI EISAUSWURFÖFFUNG
14	660638 00	LEG	PIEDINO	PIED	FUSS
15	650624 12	LABEL	ADESIVO SEGNALETICO	ETIQUETTE	ETIKETT/KLEBER
16	721873 00	RIGHT SIDE PANEL	PANNELLO LATERALE DX	PANNEAU LAT. DROIT	RECHTE WAND
17	650146 00	ICE SCOOP	SESSOLA	SASSE	EISSCHAUFEL
18	060513 00	KIT WATER SUPPLY PIPE	KIT TUBO ALIM. ACQUA	KIT TUYAU D'ALIM. EAU	WASSER ANSCHLUSSCHLAUCH
19	060513 01	KIT WATER DRAIN PIPE	KIT TUBO SCARICO ACQUA	KIT TUYAU VIDANGE EAU	WASSER SLAUFSCHLAUCH
*	650976 00	SIMAG LOGO	TARGHETTA SIMAG	EMBLEME SIMAG	SIMAG ABGEBILDET
*	– / 650805 39	SPR 165 LOGO	TARGHETTA SPR 165	EMBLEME SPR 165	SPR 165 ABGEBILDET
*	650805 42 / –	SPR 120 LOGO	TARGHETTA SPR 120	EMBLEME SPR 120	SPR 120 ABGEBILDET

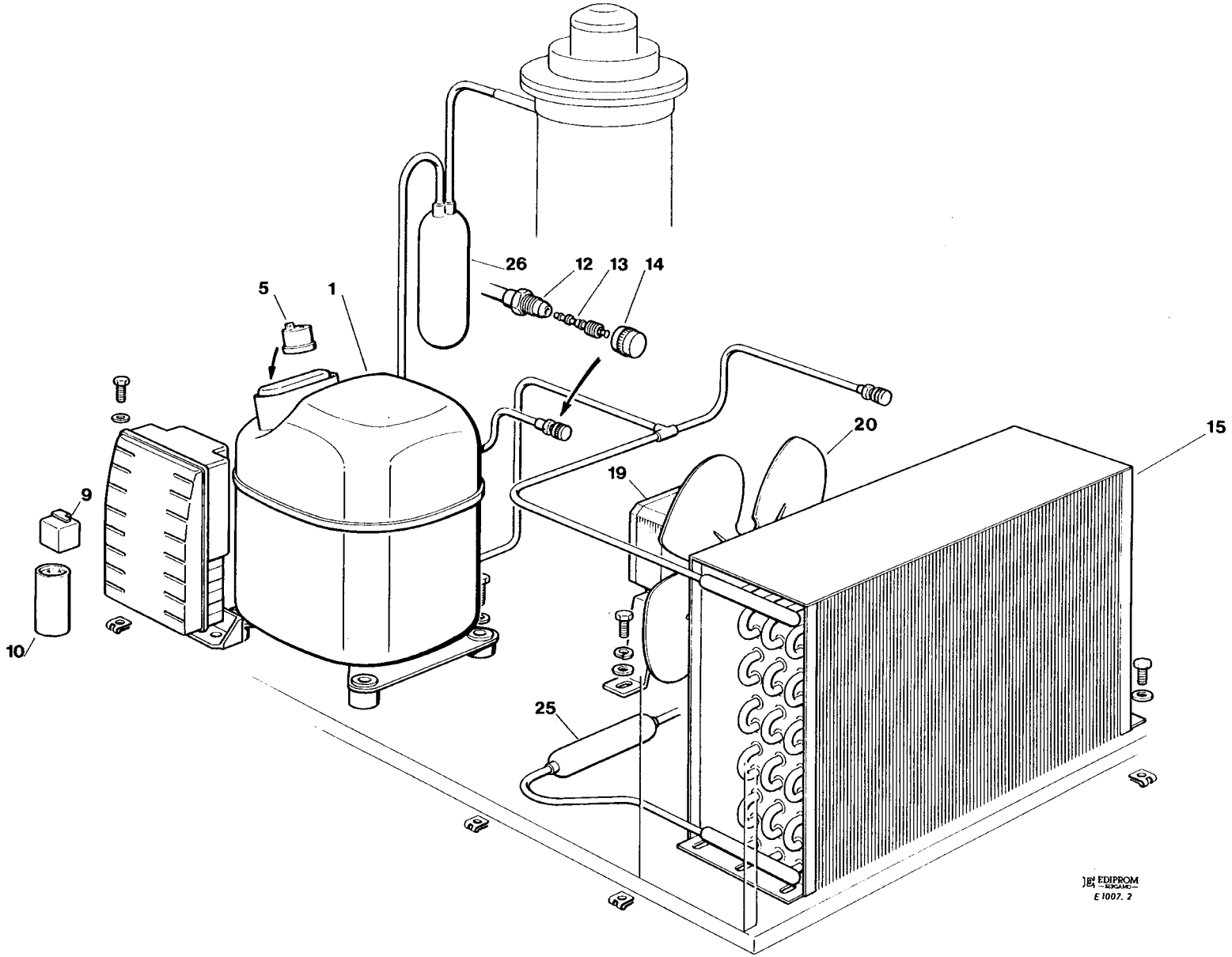
26
12
13
14
5
1
20
15
19
9
10
25
EDIPROM
BERGAMO
E 1007. 2

SPR 80 - SPR 120 - SPR 165 - REFRIGERANT SYSTEM AIR COOLED - SISTEMA REFRIGERANTE RAFFR. AD ARIA
CIRCUIT FRIGORIFIQUE REFROID. PAR AIR - LUFTGEKÜHLT GEFRIERSYSTEM

ITEM NO POS NO REP. NO REF. NO	PART NO - CODICE REFERENCE - STUECK NR **SPR 80**	**SPR 120**	**SPR 165**	DESCRIPTION	DESCRIZIONE	DESIGNATION	BESCHREIBUNG
1	670101 08* 670100 00#	670100 01	670101 03	COMPRESSOR ASSY	ASSIEME COMPRESSORE	ENSAMBLE COMPRESSEUR	KOMPRESSOR
5	620058 11* 620058 69#	620058 67	620058 51	PROTECTOR	PROTETTORE	PROTECTEUR	SCHUTZGERÄT
9	620057 60* 620057 31#	620057 56	620168 22	START RELAY	RELE DI AVVIAMENTO	RELAIS DE DEMARRAGE	RELAIS
10	620167 29* 620167 29#	620167 29	620167 49	START CAPACITOR	CAPACITA D'AVVIAMENTO	CAPACITÉ DE DEMARRAGE	START KONDENSATOR
12	650109 00			VALVE BODY	CORPO VALVOLA	CORPS DE VANNE	VENTILGEHAUSE
13	670012 00			VALVE PISTON	PISTONCINO VALVOLA	PISTON	VENTILKOLBEN
14	650106 00			VALVE CAP	CAPPUCCIO VALVOLA	CAPUCHON DE VANNE	VENTILKLAPPE
15	620420 00	620439 00	620405 00	AIR COOLED CONDENSER	CONDENSATORE AD ARIA	CONDENSEUR A AIR	LUFTGEKUEHLT KONDENSATOR
19	620419 02			FAN MOTOR	MOTORE VENTILATORE	MOTEUR VENTILATEUR	LUFTER MOTOR
20	620419 32	620419 33	620419 33	FAN BLADE	VENTOLA	HELICE	FLUEGEL
25	630003 05	630003 03	630003 03	DRIER	FILTRO DEUMIDIFICATORE	FILTRE DESHYDRATEUR	TROCKNER
26	784469 01 R	784469 03	784469 05 R	SUCTION LINE/ACCUMULATOR	ACCUMUL. E LINEA ASPIRAZIONE	ENS. ASPIRATION/ACCUMULATEUR	SAMMLER UND SAUGLEITUNGEN
				* UP TO SPR 80 S.N. 3494 # FROM SPR 80 S.N. 3495	* FINO A SPR 80 S.N. 3494 # DAL SPR 80 S.N. 3495	* JUSQ'Á SPR 80 S.N. 3494 * A PARTIR DU SPR 80 S.N. 3495	* BIS SPR 80 S.N. 3494 * VON SPR 80 S.N. 3495

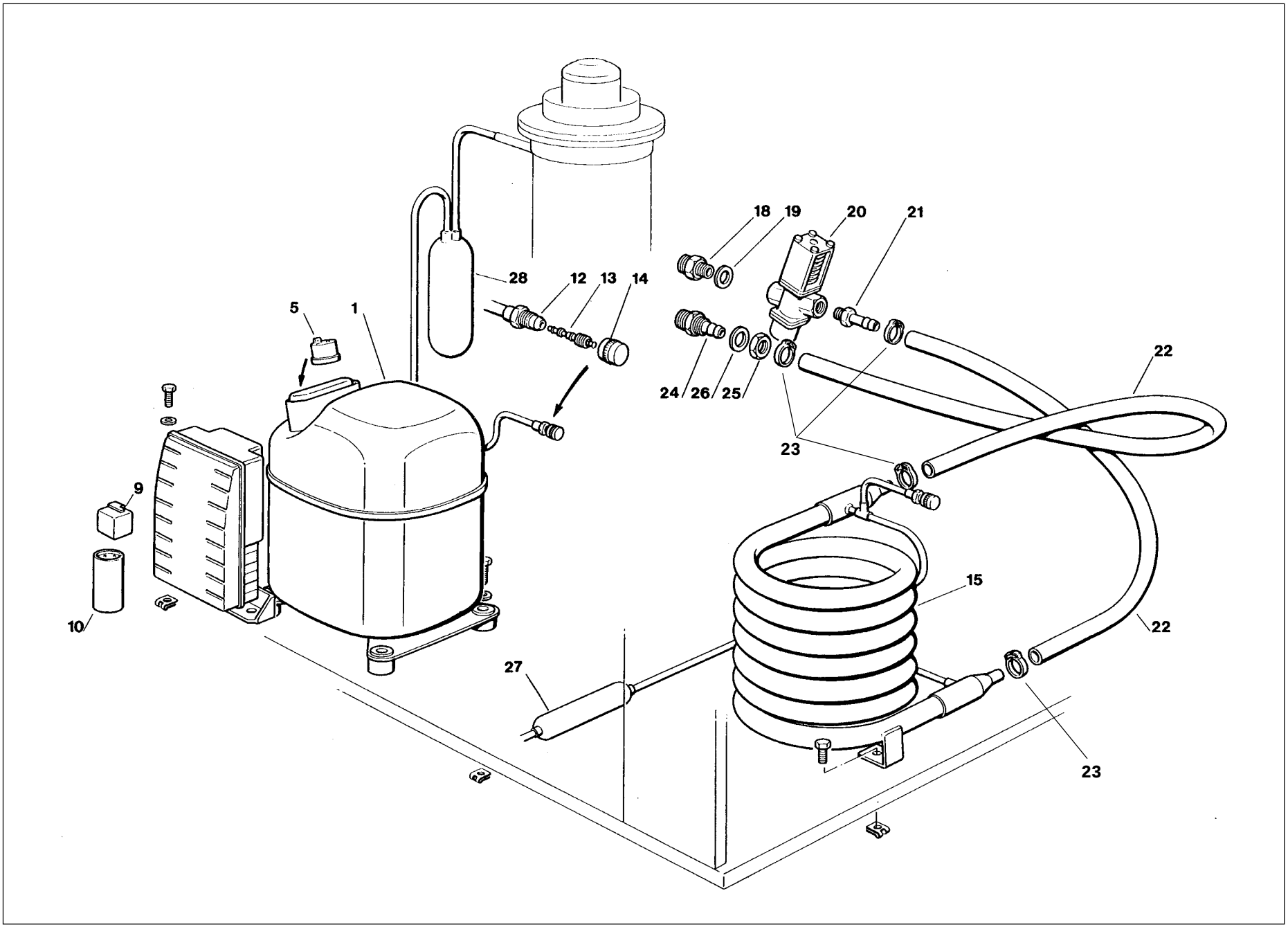
18
19
20
21
28
12
13
14
5
1
24
26
25
22
23
9
10
15
27
22
23

SPR 80 - SPR 120 - SPR 165 - REFRIGERANT SYSTEM WATER COOLED - SISTEMA REFRIGERANTE RAFFR. AD ACQUA
CIRCUIT FRIGORIFIQUE REFROID. PAR EAU - WASSERGEKÜHLT GEFRIERSYSTEM

ITEM NO POS NO REP. NO REF. NO	PART NO - CODICE REFERENCE - STUECK NR **SPR 80**	**SPR 120**	**SPR 165**	DESCRIPTION	DESCRIZIONE	DESIGNATION	BESCHREIBUNG
1	670101 08* 670100 00#	670100 01	670101 03	COMPRESSOR ASSY	ASSIEME COMPRESSORE	ENSAMBLE COMPRESSEUR	KOMPRESSOR
5	620058 11* 620058 69#	620058 67	620058 51	PROTECTOR	PROTETTORE	PROTECTEUR	SCHUTZGERÄT
9	620057 60* 620057 31#	620057 56	620168 22	START RELAY	RELE DI AVVIAMENTO	RELAIS DE DEMARRAGE	RELAIS
10	620167 29* 620167 29#	620167 29	620167 49	START CAPACITOR	CAPACITA D'AVVIAMENTO	CAPACITÉ DE DEMARRAGE	START KONDENSATOR
12	650109 00			VALVE BODY	CORPO VALVOLA	CORPS DE VANNE	VENTILGEHAUSE
13	670012 00			VALVE PISTON	PISTONCINO VALVOLA	PISTON	VENTILKOLBEN
14	650106 00			VALVE CAP	CAPPUCCIO VALVOLA	CAPUCHON DE VANNE	VENTILKLAPPE
15	620389 00			WATER COOLED CONDENSER	CONDENSATORE AD ACQUA	CONDENSEUR A EAU	WASSERGEKUEHLT KONDENSATOR
18	733204 00			WATER INLET FITTING	RACCORDO INGRESSO ACQUA	RACCORD ARRIVÉE D'EAU	WASSEREINLAUFSTÜCK
19	400031 01			FIBER WASHER	RONDELLA IN FIBRA	RONDELLE EN FIBRE	FIBER SCHEIBE
20	620111 00			WATER REGULATING VALVE	VALVOLA PRESSOSTATICA	VANNE A EAU PRESSOSTATIQUE	WASSERREGLERVENTIL
21	733094 03			OUTLET VALVE FITTING	RACCORDO USCITA VALVOLA PRESS.	RACCORD SORTIE VALVE PRESS.	WASSERREGLEREABFLUSSTUECK
22	281900 03			PLASTIC TUBE-PER METER	TUBO IN PLASTICA-PER METRO	TUYAU EN PLASTIQUE-POUR METRE	PLASTIK ROHR-PRO METER
23	650499 00			PLASTIC CLAMP	FASCETTA IN PLASTICA	COLLIER EN PLASTIQUE	PLASTIK SCHELLE
24	733174 00			WATER DRAIN FITTING	RACCORDO SCARICO ACQUA	RACCORD ÉVACUATION EAU	WASSERABFLUSSCHLAUCH
25	400030 01			NUT	DADO	ECROU	MUTTER
26	400031 00			FIBER WASHER	RONDELLA IN FIBRA	RONDELLE EN FIBRE	FIBER SCHEIBE
27	630003 05	630003 03	630003 03	DRIER	FILTRO DEUMIDIFICATORE	FILTRE DESHYDRATEUR	TROCKNER
28	784469 11 R	784469 03 R	784469 05 R	SUCTION LINE/ACCUMULATOR	ACCUMUL. E LINEA ASPIRAZIONE	ENS. ASPIRATION/ACCUMULATEUR	SAMMLER LEITUNGEN
				* UP TO SPR 80 S.N. 3494 # FROM SPR 80 S.N. 3495	* FINO A SPR 80 S.N. 3494 # DAL SPR 80 S.N. 3495	* JUSQ'Á SPR 80 S.N. 3494 * A PARTIR DU SPR 80 S.N. 3495	* BIS SPR 80 S.N. 3494 * VON SPR 80 S.N. 3495

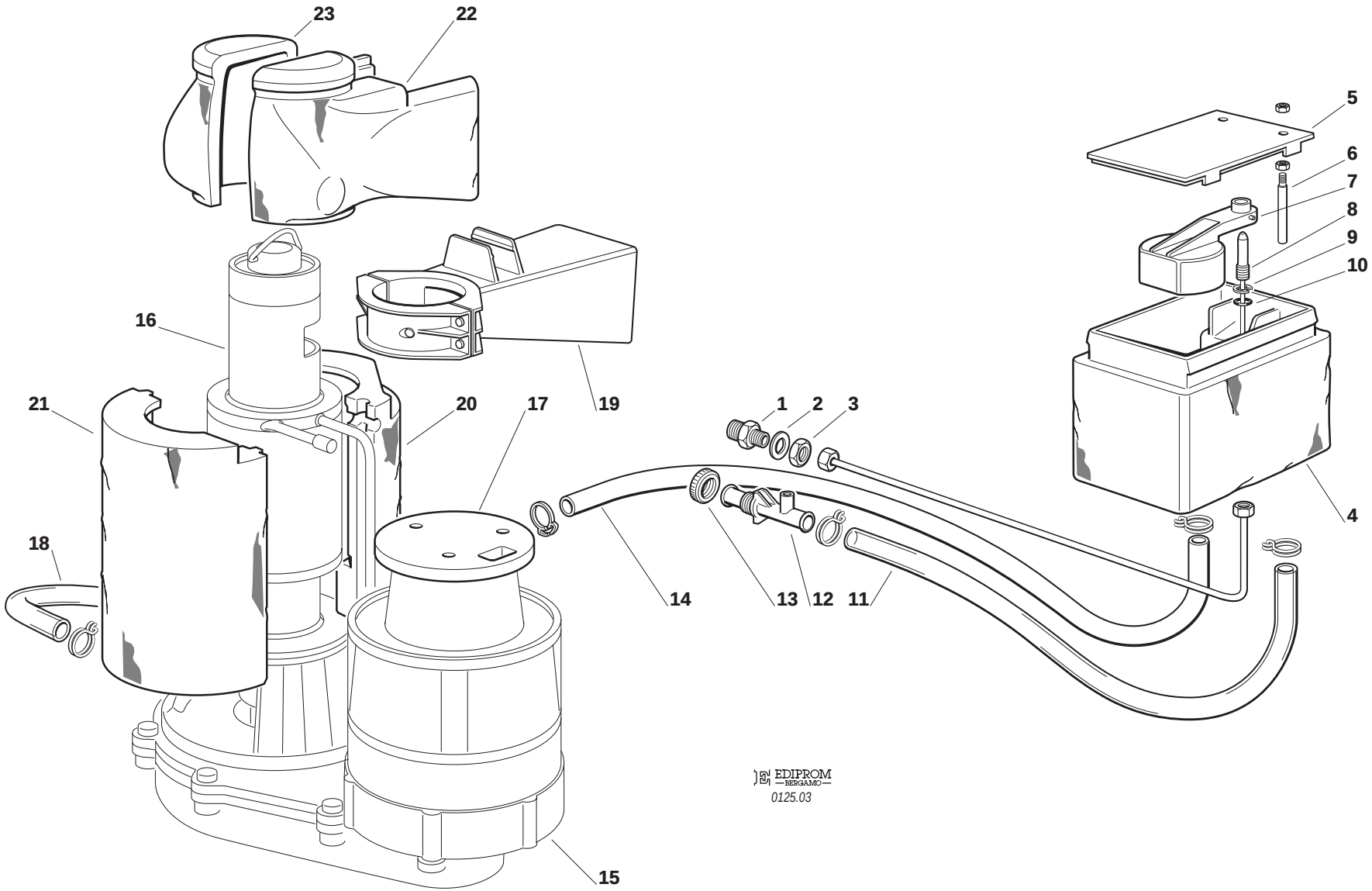
23
22
5
6
7
8
9
10
16
21
20
17
19
1
2
3
18
14
13
12
11
4
15
EDIPROM
BERGAMO
0125.03

SPR 80 - SPR 120 - SPR 165 - WATER SYSTEM AND INSULATIONS - CIRCUITO IDRAULICO ED ISOLAMENTI
CIRCUIT HYDRAULIQUE ET ISOLATIONS - WASSERKREISLAUF UND ISOLIERUNGEN

ITEM NO POS NO REP. NO REF. NO	PART NO - CODICE REFERENCE - STUECK NR **SPR 80**	**SPR 120**	**SPR 165**	DESCRIPTION	DESCRIZIONE	DESIGNATION	BESCHREIBUNG
1	733205 00			WATER INLET FITTING	RACCORDO INGRESSO ACQUA	RACCORD ARRIVEE D'EAU	WASSEREINLAUFSTUECK
2	400031 00			FIBER WASHER	RONDELLA IN FIBRA	RONDELLE EN FIBRE	FIBER SCHEIBE
3	400030 01			NUT	DADO	ECROU	MUTTER
4	793126 01			WATER RESERVOIR ASSY	ASS. VASCHETTA GALLEGGIANTE	ENS. RÉSERVOIR	BECKEN/SCHWIMMERVENTILEINHEIT
5	660363 00			WATER RESERVOIR COVER	COPERCHIO VACHETTA	COUVERCLE	BECKENABDECKUNG
6	724215 06			WATER LEVEL METAL PIN	PERNO SENSORE LIVELLO ACQUA	DETECTEUR NIVEAU EAU	FÜHLERSTIFT-WASSERNIVEAU
7	660585 00			FLOAT VALVE ASSY	ASS. GALLEGGIANTE	ENS. VANNE A FLOTTEUR	SCHWIMMERVENTIL-EINHEIT
8	783153 00			NOZZLE	UGELLO	GICLEUR	VENTILSDUESE
9	460038 02			CLIP RING	ANELLO SEEGER	CIRCLIP	RING
10	640100 00			O RING	GUARNIZIONE OR	JOINT TORIQUE	SIMMERING
11	281832 00			PLASTIC TUBE - PER MTR	TUBO IN PLASTICA - PER METRO	TUYAU EN PLASTIQUE - POUR METRE	PLASTIK ROHR - PRO METER
12	660224 00			WATER DRAIN FITTING	RACCORDO SCARICO ACQUA	RACCORD EVACUATION EAU	WASSERABFLUSSANSCHLUSSE
13	660535 00			PLASTIC RING NUT	GHIERA IN PLASTICA	COLLIER DE SERRAGE EN PLASTIQUE	PLASTIKRINGMUTTER
14	281822 00			PLASTIC TUBE - PER MTR	TUBO IN PLASTICA - PER METRO	TUYAU EN PLASTIQUE - POUR METRE	PLASTIK ROHR - PRO METER
15	794225 13 R			GEAR REDUCER ASSY	ASS. MOTORIDUTTORE	ENS .MOTOREDUCTEUR	GETRIEBEMOTOR-EINHEIT
16	794302 01 R	794236 11 R	794237 06 R	FREEZER ASSY	ASS. FREEZER	ENS. FREEZER	GEFRIERZYLINDEREINHEIT
17	650515 02			GEAR MOTOR PLASTIC COVER	PROTEZIONE MOTORE	PROTECTION MOTEUR	PLASTIK MOTORSCHUTZ
18	610163 02			PLASTIC TUBE	TUBO IN PLASTICA	TUYAU EN PLASTIQUE	PLASTIK ROHR
19	660676 01	660676 00		ICE SPOUT	BOCCHETTA SCARICO GHIACCIO	BEC VERSEUR	AUSWURFSCHNAUZE
20-21	060551 02	060551 03	060551 04	INSULATION	ISOLAMENTO	ISOLATION	GEFRIERZYLINDERISOLIERUNG
22-23	060551 00			SPOUT INSULATION	ISOLAMENTO BOCC.	ISOLATION BEC VERSEUR	AUSWURFSCHNAUZEISOLIERUNG

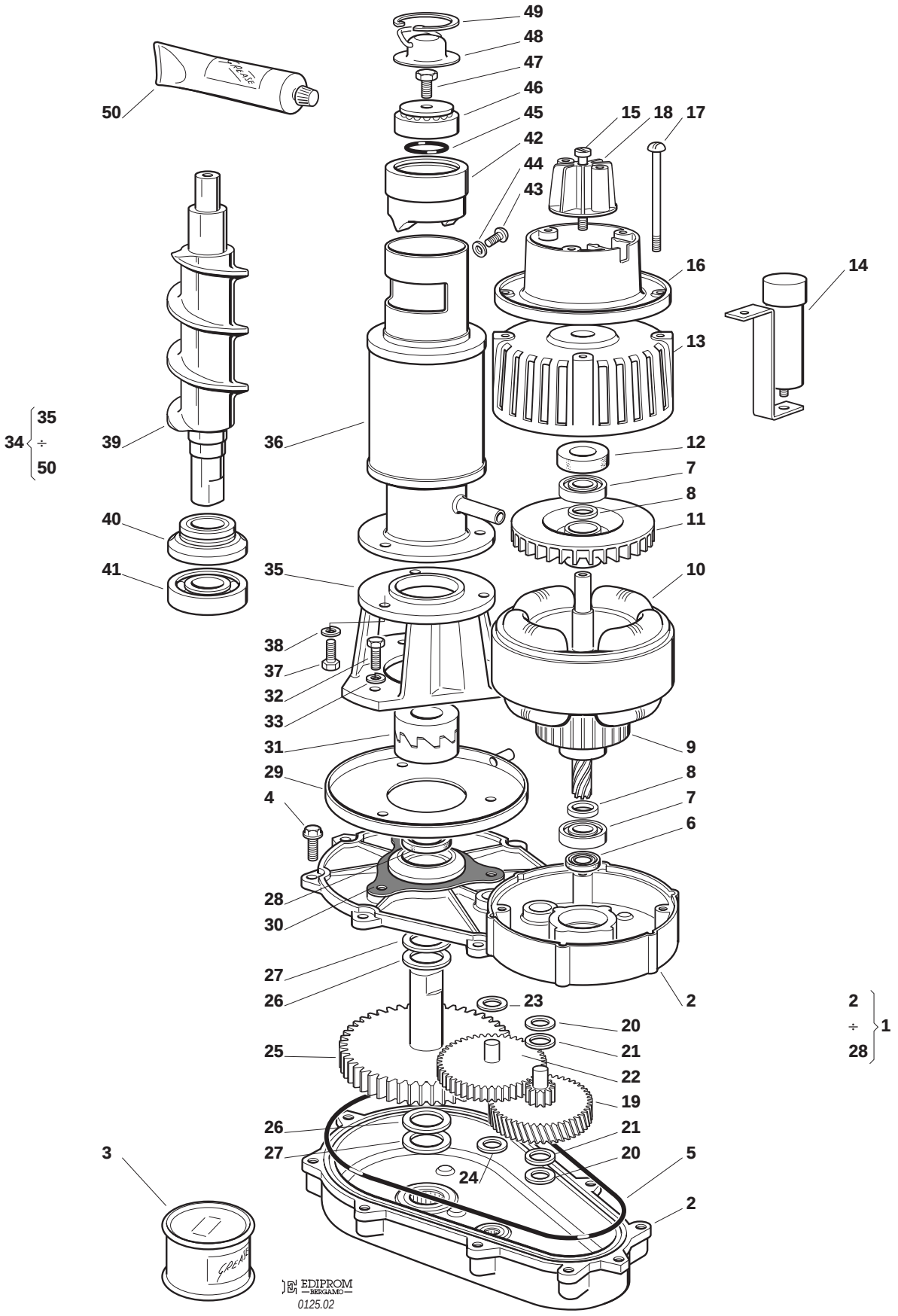
49
48
47
46
45
42
44
43
50
15
18
17
16
14
13
34
35
÷
50
39
36
12
7
8
11
40
41
35
10
38
37
32
33
31
9
29
8
4
7
6
28
30
27
26
2
23
20
21
22
19
25
26
27
21
20
5
24
2
3
2
÷
28
1
EDIPROM
BERGAMO
0125.02

SPR 80 - SPR 120 - SPR 165 - FREEZER AND GEAR REDUCER ASSY - ASSIEME FREEZER E RIDUTTORE
ENS. FREEZER ET MOTOREDUCTEUR - GEFRIERZYLINDER UND GETRIEBEEINHEIT

ITEM NO POS NO REP. NO REF. NO	PART NO - CODICE REFERENCE - STUECK NR **SPR 80**	**SPR 120**	**SPR 165**	DESCRIPTION	DESCRIZIONE	DESIGNATION	BESCHREIBUNG
1	794225 13 R			GEAR REDUCER ASSY	ASS. RIDUTTORE	ENS. MOTOREDUCTEUR	GETRIEBEMOTOR CPL
2	001015 01			GEAR CASE ASSY	ASS. SCATOLA INGRANAGGI	ENS. CARTER RÉDUCTEUR	GETRIEBEGEHAUSE CPL
3	060294 01			GREASE (1 KG)	GRASSO (1 KG)	GRAISSE (1 KG)	FETT (1 KG)
4	03 1251 01			SCREW	VITE	VIS	SCHRAUBE
5	640084 00			O RING	GUARNIZIONE OR	JOINT TORIQUE	O RING
6	640083 00			GEASE SEAL	PARAOLIO	PARAHUILE	SCHMIERDICHTUNG
7	651056 00			BEARING	CUSCINETTO	ROULEMENT	LAGER
8	441800 09			TRUST WASHER	RONDELLA DI RASAMENTO	RONDELLE.	UNTERLEG SCHEIBE
9	794123 03 R			ROTOR ASSY	ASS. ROTORE	ENS. ROTOR	ROTOR EINHEIT
10	620394 00			STATOR ASSY	ASS. STATORE	ENS. STATOR	STATOREINHEIT
11	764001 00			FAN BLADE	VENTOLA	HELICE	FLÜGEL/RAD
12	640095 00			RUBBER INSERT	INSERTO IN GOMMA	BAGUE CAOUTCHOUC	GUMMI LAGER GEHAUSE
13	794226 01			DRIVE MOTOR COVER	COPERCHIO MOTORE	COUVERCLE MOTEUR	MOTOR DEKEL
14	620292 04			CAPACITOR	CONDENSATORE	CONDENSATEUR	KONDENSATOR
15	03 1403 77			SCREW	VITE	VIS	SCHAUBE
16	650515 01			PLASTIC HOUSING	ALLOGGIAMENTO IN PLASTICA	BÔITE DETECTEUR EFF. HALL	KUNSTSTOFFGEHAUSE
17	423872 01			SCREW	VITE	VIS	SCHRAUBE
18	784476 00			MAGNETO ASSY	ASS. SUPPORTO MAGNETE	ENS. SUPPORT DU MAGNETO	MAGNETHALTER CPL
19	651160 00			1SR GEAR & PINION	INGRANAGGIO IN FIBRA	ENGRANAGE EN CELERON	1 GETRIEBERAND & RITZEL
20	441800 06			TRUST WASHER	RONDELLA DI RASAMENTO	RONDELLE.	UNTERLEG SCHEIBE
21	441800 05			TRUST WASHER	RONDELLA DI RASAMENTO	RONDELLE	UNTERLEG SCHEIBE
22	651161 00			2ND GEAR & PINION	INGRANAGGIO INTERMEDIO	2eme ENGRANAGE ET PIGNON	2 GETRIEBERAND & RITZEL
23	441800 08			TRUST WASHER	RONDELLA DI RASAMENTO	RONDELLE	UNTERLEG SCHEIBE
24	441800 07			TRUST WASHER	RONDELLA DI RASAMENTO	RONDELLE	UNTERLEG SCHEIBE
25	651162 01			OUTPUT GEAR & SHAFT	INGRANAGGIO FINALE	PIGNON-ENGR. D'ENTRAINEMENT	GETRIEBERAD & AUSGANGSTIFT
26	441800 09			TRUST WASHER	RONDELLA DI RASAMENTO	RONDELLE	UNTERLEG SCHEIBE
27	441808 00			TRUST WASHER	RONDELLA DI RASAMENTO	RONDELLE	SCHEIBE
28	640019 01			GREASE SEAL	PARAOLIO	PARAHUILE	SCHMIERDICHTUNG
29	784062 020			DRIP TRAY	RACCOGLIGOCCE	GOUPELLE EAU	TROPFPFANNE
30	640060 00			GASKET	GURNIZIONE	JOINT	DICHTUNG
31	060359 00			COUPLING	GIUNTO	BAGUE D'ACCOUPLEMENT CPL	KUPPLUNG
32	421052 00			SCREW	VITE	VIS	SCHAUBE
33	440015 04			WASHER	RONDELLA	RONDELLE	SCHEIBE
34	794302 01 R	794236 11 R	794237 06 R	FREEZER ASSY	ASS. FREEZER	ENS. FREEZER	GEFRIERZYLINDEREINHEIT
35	764010 00			ALUMINIUM ADAPTER	SUPPORTO DI ALLUMINIO	SUPPORT	PASSTUECK
36	784483 00	784260 04	784261 03	WORM TUBE ONLY	TUBO EVAPORATORE	CYLINDRE EVAPORATEUR	GEFRIERZYLINDER
37	421591 00			SCREW	VITE	VIS	SCHRAUBE
38	440015 04			WASHER	RONDELLA	RONDELLE	SCHEIBE
39	724052 08	724052 07	724052 06	AUGER	COCLEA	VIS SANS FIN	SCHNECKE
40	640040 00			WATER SEAL	ASSIEME PREMISTOPPA	GARNITURE D'ETANCHEITE	WASSERDICHTUNGEINHEIT
41	670011 01			LO BEARING	CUSCINETTO INFERIORE	PALIER INFERIEUR	UNTERESLAGER
42	060720 00			ICE BREAKER ASSY	ASSIEME ROMPIGHIACCIO	ENS. BROYEUR	KIT EISBRECHER
43	420000 26			SCREW	VITE	VIS	SCHRAUBE
44	440015 05			WASHER	RONDELLA	RONDELLE	SCHEIBE
45	640041 01			O RING	GUARNIZIONE OR	JOINT TORIQUE	O RING
46	060720 00			ICE BREAKER ASSY	ASSIEME ROMPIGHIACCIO	ENS. BROYEUR	KIT EISBRECHER
47	420030 00			SCREW	VITE	VIS	SCHAUBE
48	734105 00			CAP	CALOTTA	CALOTTE	KUGELHAUBE
49	650297 00			CLIP RING	ANELLO SEEGER	CIRCLIP	RING
50	263612 00			WATER PROOF GREASE	GRASSO IDROREPELL.	GRAISSE	FETT

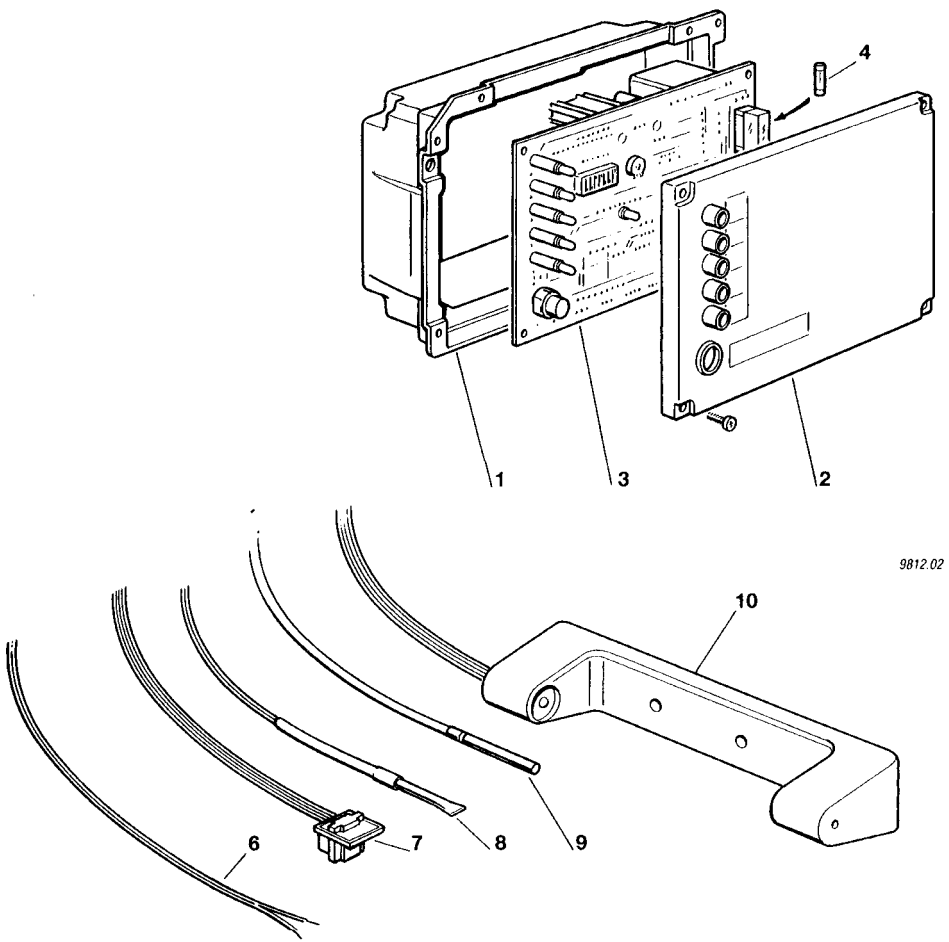
4
1
3
2
9812.02
10
6
7
8
9

SPR 80*- SPR 120# - SPR 165** - P.C. BOARD AND SENSOR ASSY - SCHEDA ELETTRONICA E SENSORI - ENS. CARTE ELECTRINIQUE ET DETECTEURS ELEKTRONISCHE KARTE UND TEMPERATURFUEHLERENHEIT

ITEM NO POS. NO REP. NO REF. NO	PART NO CODICE REFERENCE STUECK NR	DESCRIPTION	DESCRIZIONE	DESIGNATION	BESCHREIBUNG
1-2-3	620462 02	P.C. BOARD ASSY	ASSIEME SCHEDA ELETTRONICA	ENSAMBLE CARTE ELECTRONIQUE	GEDRUCKTESCHALTUNG
4	630015 09	FUSE (100 mA)	FUSIBILE (100 mA)	FUSIBLE (100 mA)	SCHMELZSICHERUNG (100 mA)
	630015 10	FUSE (16 A)	FUSIBILE (16 A)	FUSIBLE (16 A)	SCHMELZSICHERUNG (16 A)
6	620404 13	WATER LEVEL SENSOR	SENSORE LIVELLO ACQUA	CAPTEUR NIVEAU EAU	WASSERNIVEAUFÜHLER
7	620404 03	HALL EFFECT SENSOR	SENSORE EFFETTO HALL	CAPTEUR EFFECT HALL	HALL EFFEKT-FÜHLER
8	620404 11	CONDENSER TEMP. SENSOR	SENSORE TEMP. CONDENSATORE	CAPTEUR TEMP. CONDENSEUR	KONDENSATORTEMPERATURFUEHLER
9	620404 10	EVAPORATOR TEMP. SENSOR	SENSORE TEMP. EVAPORATORE	CAPTEUR TEMP. ÉVAPORATEUR	VERDAMPFERTEMPERATURFUEHLER
10	650674 01	ICE LEVEL CONTROL ASSY	ASS. CONTR. LIVELLO GHIACCIO	ENS. DETECTEUR NIVEAU GLACE	EISNIVEAUFUEHLEREINHEIT
		* UP TO SPR 80 S.N. OA 5810 # UP TO SPR 120 S.N. OC 673 ** UP TO SPR 165 S.N. OB 2570	* FINO A SPR 80 S.N. OA 5810 # FINO A SPR 120 S.N. OC 673 ** FINO A SPR 165 S.N. OB 2570	* JUSQ'Á SPR 80 S.N. OA 5810 # JUSQ'Á SPR 120 S.N. OC 673 ** JUSQ'Á SPR 165 S.N. OB 2570	* BIS SPR 80 S.N. OA 5810 # BIS SPR 120 S.N. OC 673 # BIS SPR 165 S.N. OB 2570

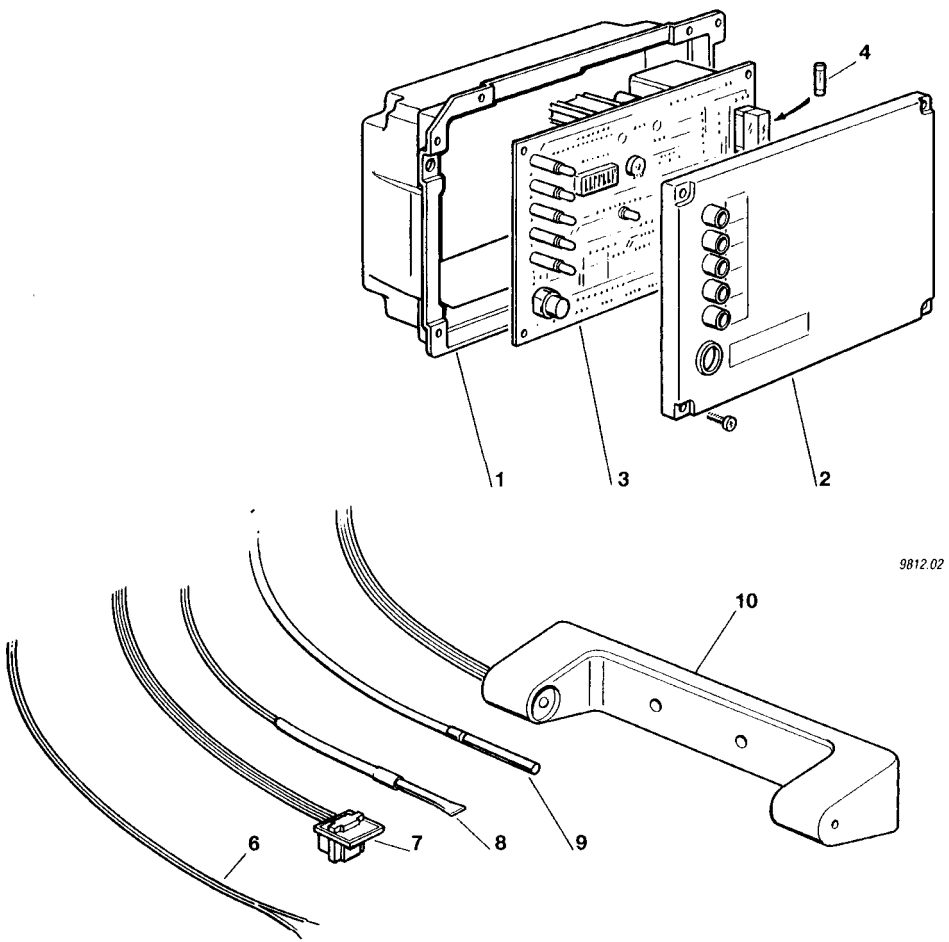
4
1
3
2
9812.02
10
6
7
8
9

SPR 80*- SPR 120# - SPR 165** - P.C. BOARD AND SENSOR ASSY - SCHEDA ELETTRONICA E SENSORI - ENS. CARTE ELECTRINIQUE ET DETECTEURS ELEKTRONISCHE KARTE UND TEMPERATURFUEHLERENHEIT

ITEM NO POS. NO REP. NO REF. NO	PART NO CODICE REFERENCE STUECK NR	DESCRIPTION	DESCRIZIONE	DESIGNATION	BESCHREIBUNG
1-2-3	620462 13	P.C. BOARD ASSY	ASSIEME SCHEDA ELETTRONICA	ENSAMBLE CARTE ELECTRONIQUE	GEDRUCKTESCHALTUNG
4	630015 09	FUSE (100 mA)	FUSIBILE (100 mA)	FUSIBLE (100 mA)	SCHMELZSICHERUNG (100 mA)
	630015 10	FUSE (16 A)	FUSIBILE (16 A)	FUSIBLE (16 A)	SCHMELZSICHERUNG (16 A)
6	620519 02	WATER LEVEL SENSOR	SENSORE LIVELLO ACQUA	CAPTEUR NIVEAU EAU	WASSERNIVEAUFÜHLER
7	620404 03	HALL EFFECT SENSOR	SENSORE EFFETTO HALL	CAPTEUR EFFECT HALL	HALL EFFEKT-FÜHLER
8	620519 00	CONDENSER TEMP. SENSOR	SENSORE TEMP. CONDENSATORE	CAPTEUR TEMP. CONDENSEUR	KONDENSATORTEMPERATURFUEHLER
9	620519 01	EVAPORATOR TEMP. SENSOR	SENSORE TEMP. EVAPORATORE	CAPTEUR TEMP. ÉVAPORATEUR	VERDAMPFERTEMPERATURFUEHLER
10	650674 01	ICE LEVEL CONTROL ASSY	ASS. CONTR. LIVELLO GHIACCIO	ENS. DETECTEUR NIVEAU GLACE	EISNIVEAUFUEHLEREINHEIT
		* FROM SPR 80 S.N. OA 5811 TO S.N OA 6236 # FROM SPR 120 S.N. OC 674 TO S.N OC 859 ** FROM SPR 165 S.N. OB 2571 TO S.N OB 2685	* DA SPR 80 S.N. OA 5811 A S.N. OA 6236 # DA SPR 120 S.N. OC 674 A S.N. OC 859 ** DA SPR 165 S.N. OB 2571 A S.N. OB 2685	* A PARTIR DU SPR 80 S.N. OA 5811 Á S.N. OA 6236 # A PARTIR DU SPR 120 S.N. OC 674 Á S.N. OC 859 ** A PARTIR DU SPR 165 S.N. OB 2571 Á S.N. OB 2685	* VON SPR 80 S.N. OA 5811 BIS S.N. OA 6236 # VON SPR 120 S.N. OC 674 BIS S.N. OC 859 ** VON SPR 165 S.N. OB 2571 BIS S.N. OB 2685

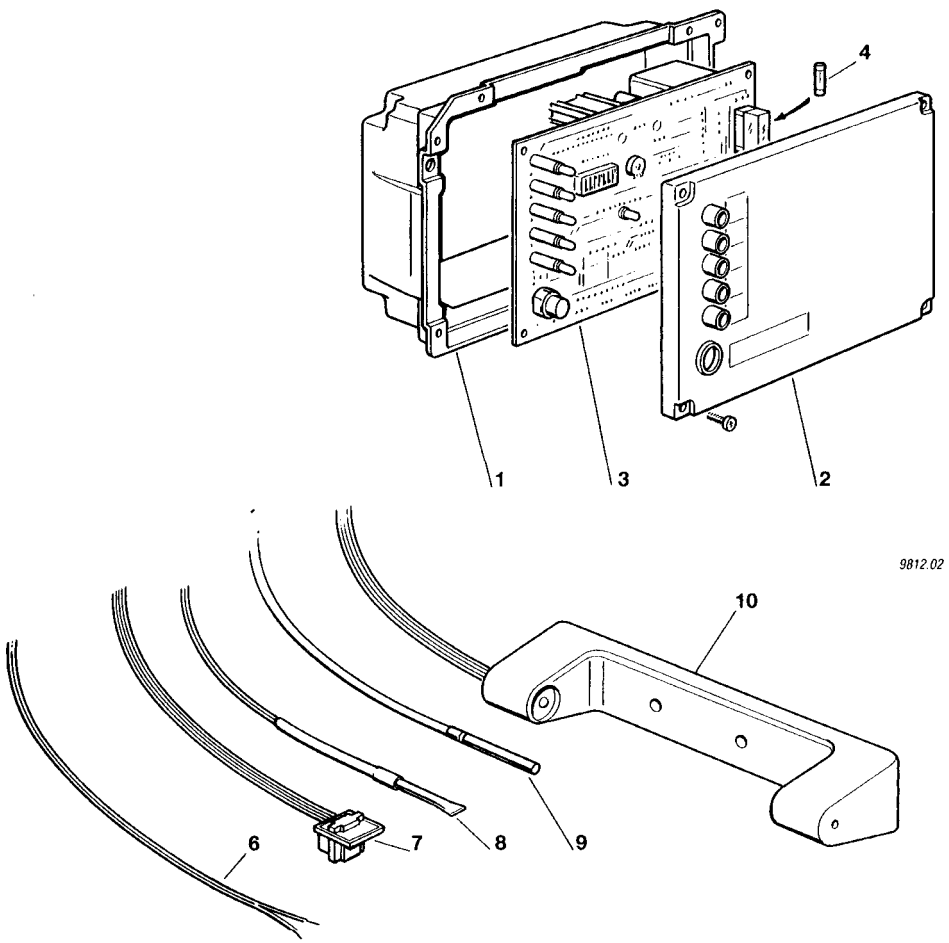
4
1
3
2
9812.02
10
6
7
8
9

SPR 80*- SPR 120# - SPR 165** - P.C. BOARD AND SENSOR ASSY - SCHEDA ELETTRONICA E SENSORI - ENS. CARTE ELECTRINIQUE ET DETECTEURS ELEKTRONISCHE KARTE UND TEMPERATURFUEHLERENHEIT

ITEM NO POS. NO REP. NO REF. NO	PART NO CODICE REFERENCE STUECK NR	DESCRIPTION	DESCRIZIONE	DESIGNATION	BESCHREIBUNG
1-2-3	620462 15	P.C. BOARD ASSY	ASSIEME SCHEDA ELETTRONICA	ENSAMBLE CARTE ELECTRONIQUE	GEDRUCKTESCHALTUNG
4	630015 09	FUSE (100 mA)	FUSIBILE (100 mA)	FUSIBLE (100 mA)	SCHMELZSICHERUNG (100 mA)
	630015 10	FUSE (16 A)	FUSIBILE (16 A)	FUSIBLE (16 A)	SCHMELZSICHERUNG (16 A)
6	620519 02	WATER LEVEL SENSOR	SENSORE LIVELLO ACQUA	CAPTEUR NIVEAU EAU	WASSERNIVEAUFÜHLER
7	620404 03	HALL EFFECT SENSOR	SENSORE EFFETTO HALL	CAPTEUR EFFECT HALL	HALL EFFEKT-FÜHLER
8	620519 00	CONDENSER TEMP. SENSOR	SENSORE TEMP. CONDENSATORE	CAPTEUR TEMP. CONDENSEUR	KONDENSATORTEMPERATURFUEHLER
9	620519 01	EVAPORATOR TEMP. SENSOR	SENSORE TEMP. EVAPORATORE	CAPTEUR TEMP. ÉVAPORATEUR	VERDAMPFERTEMPERATURFUEHLER
10	650674 01	ICE LEVEL CONTROL ASSY	ASS. CONTR. LIVELLO GHIACCIO	ENS. DETECTEUR NIVEAU GLACE	EISNIVEAUFUEHLEREINHEIT
		* FROM SPR 80 S.N. OA 6237 # FROM SPR 120 S.N. OC 860 ** FROM SPR 165 S.N. OB 2686	* DA SPR 80 S.N. OA 6237 # DA SPR 120 S.N. OC 860 ** DA SPR 165 S.N. OB 2686	* A PARTIR DU SPR 80 S.N. OA 6237 # A PARTIR DU SPR 120 S.N. OC 860 ** A PARTIR DU SPR 165 S.N. OB 2686	* VON SPR 80 S.N. OA 6237 # VON SPR 120 S.N. OC 860 ** VON SPR 165 S.N. OB 2686

COMPRESSOR CHART - TABELLA COMPRESSORI - TABLEAU COMPRESSEUR - KOMPRESSOR KARTE

MODEL MODELLO MODELE MODELL	VOLTS TENSIONE TENSION SPANNUNG	COMPRESSOR MODEL MOD. COMPRESSORE TYPE COMPRESSEUR KOMPRESSOR TYP	COMPRESSOR COMPRESSORE COMPRESSEUR KOMPRESSOR	RELAY RELÉ RELAIS RELAIS	PROTECTOR PROTETTORE PROTECTEUR SCHUTZGERAT	START CAPACITOR CAPACITA' D'AVV. CAPACITÉ DE DEMARRAGE START KONDENSATO	RUN CAPACITOR CAPACITA' DI MARCIA CAPACITÈ PERMANENCE BETRIEB KONDENSATOR
SPR 80	115/60/1	U.H.AEZ 4430Y	670101 05	620057 58	620058 93	620167 55	–
SPR 80	115/60/1	CUBIGEL GL 90 TE	670100 06	620057 66	620058 97	620167 48	–
SPR 120	115/60/1	–	–	–	–	–	–
SPR 165	115/60/1	U.H.CAE 9470Z	670101 07	620168 26	620058 89	620167 55	620167 19
SPR 80	230/60/1	U.H.AEZ 4430Y	670101 01	620057 42	620058 77	620167 51	–
SPR 165	230/60/1	CAE 9470Z	670101 04	620168 25	620058 04	620167 30	
SPR 80	230/50/1	U.H.AEZ 4430Y*	670101 08	620057 60	620058 11	620167 29	
SPR 80	230/50/1	ACC GL 90 TB #	670100 00	620057 31	620058 69	620167 29	-
SPR 120	230/50/1	U.H. CAE 4448Y*	670101 00	620057 42	620058 71	620167 49	-
SPR 120	230/50/1	ACC GP 14TB#	670100 01	620057 56	620058 67	620167 29	-
SPR 165	230/50/1	U.H.CAE 9470Z	670101 03	620168 22	620058 51	620167 49	620167 21

* UP TO SPR 80 (3494)-SPR 120 (269) FINO A SPR 80 (3494)-SPR 120 (269) JUSQ'Á SPR 80 (3494)-SPR 120 (269) BIS SPR 80 (3494)-SPR 120 (269)
# FROM SPR 80 (3495)-SPR 120 (270) FINO A SPR 80 (3495)-SPR 120 (270) A PARTIR DU SPR 80 (3495)-SPR 120 (270) VON SPR 80 (3495)-SPR 120(270)

ELECTRIC COMPONENTS CHART - TABELLA COMPONENTI ELETTRICI - TABLEAU COMPOSANTS ELECTRIQUE - ELEKTRISCHEKARTE

MODEL MODELLO MODELE MODELL	VOLTS TENSIONE TENSION SPANNUNG	GEAR MOTOR ASSY ASS. MOTORIDUTTORE ENS. MOTOREDUCTEUR GETRIEBEMOTOREINHEIT	FAN MOTOR ONLY MOTORE VENTILATORE MOTEUR VENTILATEUR LUFTER MOTOR	DRIVE MOTOR CAPACITOR CAPACITA' MOTORE RIDUTT. CONDENSATEUR MOTEUR REDUCT. KONDENSATOR	P.C. BOARD SCHEDA ELETTRONICA CARTE ELECTRONIQUE ELEKTRONISCHE KARTE
SPR 80	115/60/1	794225 14 R	620419 03 / 620419 01 (Air / Water)	620292 00	
SPR 120	115/60/1	–	–	–	
SPR 165	115/60/1	794225 14 R	620419 03	620292 00	
SPR 80	230/60/1	794225 13 R	–	620292 04	
SPR 120	115/60/1	–	–	–	
SPR 165	230/60/1	794225 13R	620419 02	620292 04	
SPR 80	230/50/1	794225 13 R	620419 02	620292 04	
SPR 120	115/60/1	794225 13 R	620419 02	620292 04	
SPR 165	230/50/1	794225 13 R	620419 02	620292 04	

SIMAG
ICE MACHINES

www.simag.it

SIMAG
via Risorgimento, 4
20017 Mazzo di Rho (MI) - Italy
Tel. +39 02 93900215 (Commerciale - Sales Dept.)
Tel. +39 02 93960357 (Assistenza - Service Dept.)
Fax +39 02 93900226 (Commerciale - Sales Dept.)
Fax +39 02 93960366 (Assistenza - Service Dept.)
e-mail: sales@simag.it
e-mail: service@simag.it

Singapore Office
SIMAG FAR EAST
627A Aljunied Road
04-04 Biztech Centre
Singapore 389842
Tel. ++65 6738 5393
Fax ++65 6738 1959
e-mail: scotsice@singnet.com.sg

Certified ISO 9001
TOTAL QUALITY