DESPIECE TECNICO

Lavavajillas de apertura frontal
Lave-vaisselle à ouverture frontale
Front loading dishwasher
Geschirrspülmaschinen mit frontbeladung
Lavastoviglie ad apertura frontale
Lava-louças de apertura frontal

Modelos:

FI-60 DD

Marzo 2012 March

Revisado Agosto 2013 August Revised

FAGOR

FAGOR INDUSTRIAL

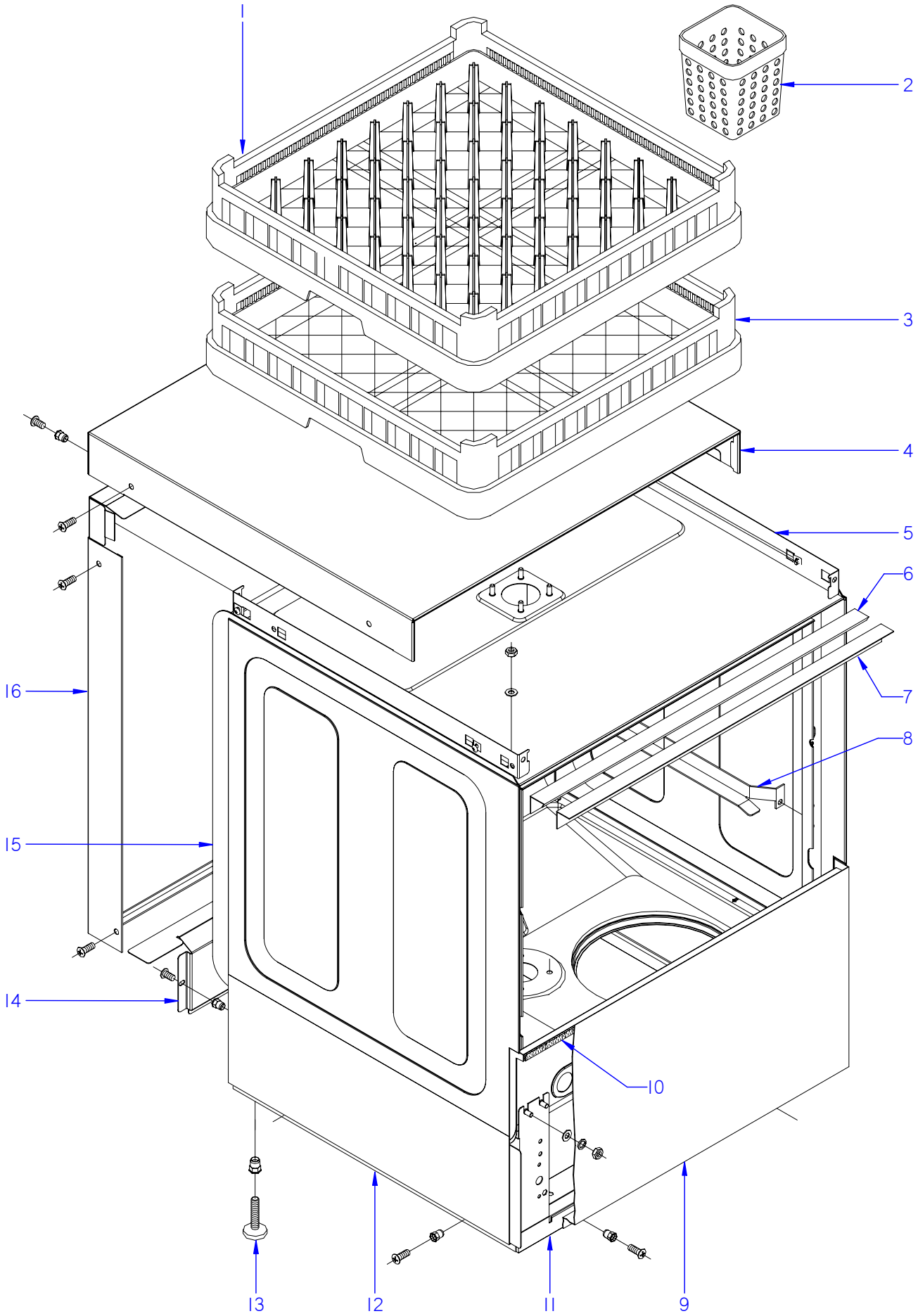

ITEM MARCADO EN COLOR = REPUESTO RECOMENDADO
COLOURED ITEM = RECOMMENDED SPARE PART

Nº plano / N º plane	Firma	Fecha / Date	Denominación / Denomination: MUEBLE / FITTING	Lamina / Sheet	
C-2956		2012-03	LAVAVAJILLAS FI-60 DD	1	Fagor Industrial S.Coop. FAGOR Oñate

MOD.	LAVAVAJILLAS DE APERTURA FRONTAL FRONT LOADING DISHWASHER	ZONA / ZONE	MUEBLE / FITTING	PLANO DIAGRAM	C-2956

ITEM	CODIGO REFERENCE	DENOMINACION	DENOMINATION	FI-60 DD								ELIMINADO ELIMINATED	INTRODUCID. INTRODUCED	NOTAS
1	Z655302000	CESTILLO PLATOS CP-16-18	PLATE BASKET CP-16-18	1										
2	Z655314000	CESTILLO CUBIERTOS	CUTLERY BASKET	1										
3	Z655301000	CESTILLO BASE CT-10	BASE BASKET CT-10	1										
	Z209121000	TOPE 50x50x80	BUFFER 50x50x80	2										
4	Z202906000	TAPA T-CO.	COVER T-CO.	1										
	Q221342000	REMACHE EXAGONAL M5	HEXAGONAL RIVET M5	2										
	Q152004000	TORNIL, APLASTADO M5x13 A304	FLAT HEADED BOLT M5x13 A304	2										
	Q152004000	TORNIL, APLASTADO M5x13 A304	FLAT HEADED BOLT M5x13 A304	4										
	Q221012000	TUERCA RAPIDA M,5	RAPID NUT M,5	4										
	3713500000	PERFIL CUBREARISTAS PLASTICO	PLASTIC EDGE COVER PROFILE	1										
5	Z200346000	ESCUADRA AMARRE TAPA AF	COVER FASTENING BRACKET AF	2										
	Q162040000	TUERCA EXAGONAL M6	HEXAGONAL NUT M6	4										
	Q232040000	ARANDELA A6	WASHER A6	4										
	Q012073000	TORNILLO EXAGONAL M12X20	HEXAGONAL BOLT M12x20	2										
	Q306024000	JUNTA18X12.5X1.5	SEAL 18X12.5X1.5	2										
	Q162070000	TUERCA EXAGONAL M12	HEXAGONAL NUT M12	2										
6	Z200315000	PERFIL CAJA	BOX PROFILE	1										
7	Z200309000	ESCUADRA SUJECCION PERFIL	FASTENING BRACKET PROFILE	1										
8	Z200347000	GUIA CESTILLO DERECHO	RIGHT BASKET GUIDE	1										
S/Nº	Z200348000	GUIA CESTILLO IZQUIERDO	LEFT BASKET GUIDE	1										
	Q162040000	TUERCA EXAGONAL M6	WASHER A6	4										
	Q232040000	ARANDELA A6	HEXAGONAL NUT M6	4										
	Q012073000	TORNIL. EXAGONAL M12x20 A.304	HEXAGONAL BOLTm12x20 A.304	2										
9	Z202913000	PANEL FRONTAL SIN PUERTA	FRONT PANEL WITHOUT DOOR	1										
	Q152004000	TORNIL, APLASTADO M5x13 A304	FLAT HEADED BOLT M5x13 A304	2										
10	Z200313000	PERFIL GOMA ESPONJOSA	FOAM RUBBER PROFILE	1										
11	Z200101000	ARMAZON COMPLETO	COMPLETE FRAME	1										
12	Z202903000	PANEL LATERAL IZQUIERDO	LEFT SIDE PANEL	1										
	Q152004000	TORNIL, APLASTADO M5x13 A304	FLAT HEADED BOLT M5x13 A304	2										
S/Nº	Z202902000	PANEL LATERAL DERECHO	RIGHT SIDE PANEL	1										
	Q152004000	TORNIL, APLASTADO M5x13 A304	FLAT HEADED BOLT M5x13 A304	2										

MOD.	LAVAVAJILLAS DE APERTURA FRONTAL FRONT LOADING DISHWASHER	ZONA / ZONE	MUEBLE / FITTING	PLANO DIAGRAM	C-2956

ITEM	CODIGO REFERENCE	DENOMINACION	DENOMINATION	FI-60 DD								ELIMINADO ELIMINATED	INTRODUCID. INTRODUCED	NOTAS
13	Z200107000	PATA REGULABLE	ADJUSTABLE LEG	4										
14	Z202921000	PANEL POSTERIOR INFERIOR	REAR LOWER PANEL	1										
	Q152004000	TORNIL, APLASTADO M5x13 A304	FLAT HEADED BOLT M5x13 A304	2										
15	Z208730000	CAJA SOLDADA	WELDED BOX	1										
	Q162040000	TUERCA EXAGONAL M6	HEXAGONAL NUT M6	8										
	Q302022000	ARANDELA 16X6X1.2 A.304	WASHER 16X6X1.2 A.304	8										
	Q262040000	ARANDELA GROW. A6 A.304	WASHER GROW. A6 A.304	8										
16	Z202904000	PANEL POSTERIOR ALU.FI-30	ALU.FI-30 REAR PANEL	1										
	Q152004000	TORNIL, APLASTADO M5x13 A304	FLAT HEADED BOLT M5x13 A304	4										

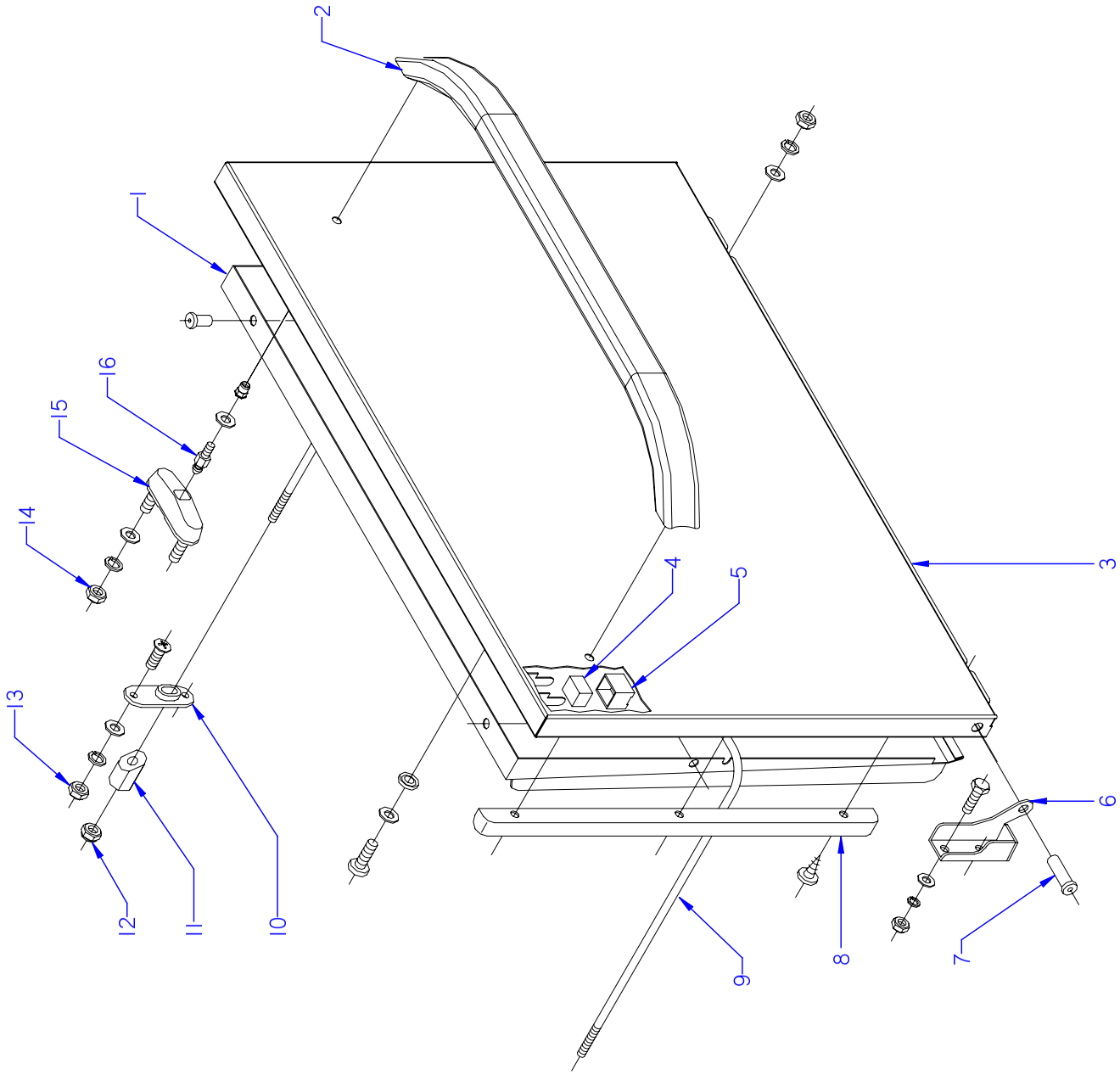

ITEM MARCADO EN COLOR = REPUESTO RECOMENDADO
COLOURED ITEM = RECOMMENDED SPARE PART

Nº plano / N º plane	Firma	Fecha / Date	Denominación / Denomination: PUERTA / DOOR	Lamina / Sheet	
C-2957		2012-03	LAVAVAJILLAS FI-60 DD	2	Fagor Industrial S.Coop. FAGOR Oñate

MOD.	LAVAVAJILLAS DE APERTURA FRONTAL FRONT LOADING DISHWASHER	ZONA / ZONE	PUERTA / DOOR	PLANO DIAGRAM	C-2957

ITEM	CODIGO REFERENCE	DENOMINACION	DENOMINATION	FI-60 DD								ELIMINADO ELIMINATED	INTRODUCID. INTRODUCED	NOTAS
	1200005030	**KIT PUERTA LAVAJILLAS FI 64**	**DOOR KIT FI 64 DISHWASHER**	**1**										
1	Z200556000	CONTRAPUERTA SOLDADA	WELDED COUNTERDOOR	1										
	Q412000000	REMACHE TUBULAR 4 x 8	TUBULAR RIVET 4 x 8	4										
	Q232030000	ARANDELA A5	WASHER A5	2										
	Q162030000	TUERCA EXAGONAL M5	HEXAGONAL NUT M5	2										
	Q262030000	ARANDELA GROW. A5 A.304	WASHER GROW. A5 A.304	2										
2	Z200551000	ASA PUERTA	DOOR HANDLE	1										
3	Z218005000	PUERTA SOLDADA	WELDED DOOR	1										
4	Z200506000	IMAN	MAGNET	1										
5	Z200507000	PROTECTOR IMAN	MAGNET PROTECTOR	1										
6	Z400514000	BISAGRA IZQUIERDA T-C.	LEFT HINGE T-C.	1										
	Q012042000	TORNIL. EXAGONAL M6X15 A.304	HEXAGONAL BOLT M6X15 A.304	2										
	Q232040000	ARANDELA A6	WASHER A6	2										
	Q262040000	ARANDELA GROW. A6 A.304	WASHER GROW. A6 A.304	2										
	Q162040000	TUERCA EXAGONAL M6	HEXAGONAL NUT M6	1										
S/Nº	Z400515000	BISAGRA DERECHA T-C.	RIGHT HINGE T-C.	1										
	Q012042000	TORNIL. EXAGONAL M6X15 A.304	HEXAGONAL BOLT M6X15 A.304	2										
	Q232040000	ARANDELA A6	WASHER A6	2										
	Q262040000	ARANDELA GROW. A6 A.304	WASHER GROW. A6 A.304	2										
	Q162040000	TUERCA EXAGONAL M6	HEXAGONAL NUT M6	1										
7	Z400516000	EJE PUERTA	DOOR SHAFT	2										
8	Z200524000	MARCO PUERTA	DOOR FRAME	2										
	Q412000000	REMACHE TUBULAR 4 x 8	TUBULAR RIVET 4 x 8	6										
	Q032041000	TORNILLO ALOMADO M6X10	CURVED SCREW M6x10	2										
	Q308002000	ARANDELA DUBO A6 NYLON	WASHER DUBO A6 NYLON	2										
9	Z200555000	VARILLA TENSOR	TENSIONING ROD	1										
10	Z200310000	SOPORTE TENSOR	TENSOR SUPPORT	2										
11	Z200522000	TENSOR PUERTA	DOOR TENSOR	2										
12	Q222012000	TUERCA AUTOB. M6	SELF-LOCK NUT M6	2										

MOD.	LAVAVAJILLAS DE APERTURA FRONTAL FRONT LOADING DISHWASHER	ZONA / ZONE	PUERTA / DOOR	PLANO DIAGRAM	C-2957

ITEM	CODIGO REFERENCE	DENOMINACION	DENOMINATION	FI-60 DD								ELIMINADO ELIMINATED	INTRODUCID. INTRODUCED	NOTAS
13	Q162030000	TUERCA EXAGONAL M5	HEXAGONAL NUT M5	4										
	Q152004000	TORNIL, APLASTADO M5x13 A304	FLAT HEADED BOLT M5x13 A304	4										
	Q232030000	ARANDELA A5	WASHER A5	4										
	Q262030000	ARANDELA GROW. A5 A.304	WASHER GROW. A5 A.304	4										
14	Q222012000	TUERCA AUTOB. M6	SELF-LOCK NUT M6	4										
15	Z200607000	CONJUNTO CIERRE PUER.T-CO	LOCK UNIT DOOR T-CO	2										
16	Z200601000	ENGANCHE CIERRE	LOCK LATCH	2										

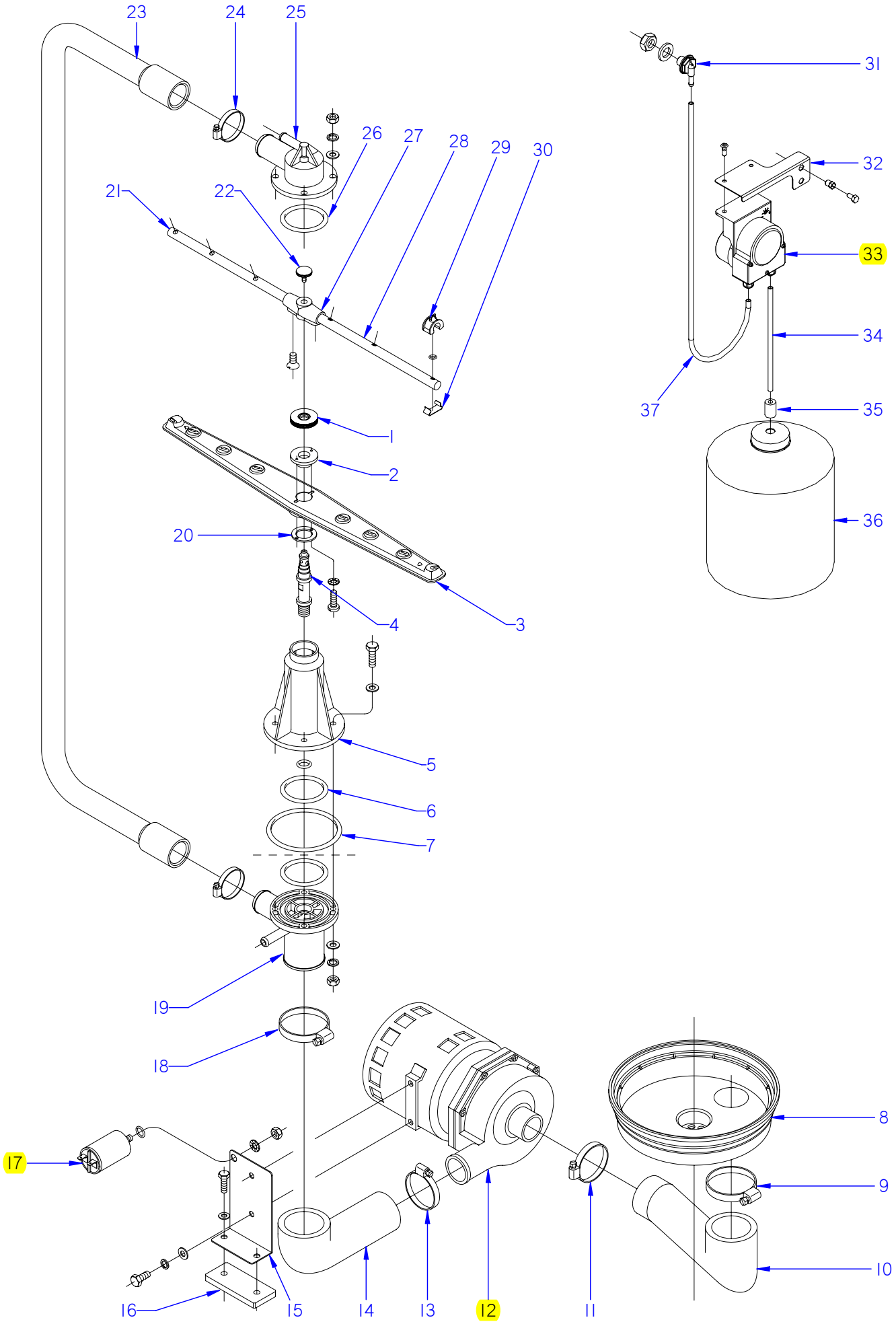

ITEM MARCADO EN COLOR = REPUESTO RECOMENDADO
COLOURED ITEM = RECOMMENDED SPARE PART

Nº plano / N º plane	Firma	Fecha / Date	Denominación / Denomination: FUNCIONAL LAVADO / WASH FUNCTIONAL	Lamina / Sheet	
C-2958		2012-03	LAVAVAJILLAS FI-60 DD	3	Fagor Industrial S.Coop. FAGOR Oñate

MOD.	LAVAVAJILLAS DE APERTURA FRONTAL FRONT LOADING DISHWASHER	ZONA / ZONE	PARTE FUNCIONAL LAVADO WASH FUNCTIONAL PART	PLANO DIAGRAM	C-2958

ITEM	CODIGO REFERENCE	DENOMINACION	DENOMINATION	FI-60 DD								ELIMINADO ELIMINATED	INTRODUCID. INTRODUCED	NOTAS
1	Z200705000	TUERCA ESPECIAL M.14X1	SPECIAL NUT M.14X1	2										
2	Z650704000	ENGANCHE DISTRIBUIDOR	DISTRIBUTOR HOOK	2								11.02.13		
2	12045103	ENGANCHE DISTRIBUIDOR	DISTRIBUTOR CATCH	2									11.02.13	
3	Z650716000	DISTRIBUIDOR MONTADO	DISTRIBUTOR MOUNTED	2										
4	Z200704000	EJE CENTRAL	CENTRAL SHAFT	2										
5	Z200701000	SOPORTE DISTRIBUID. INFERIOR	LOWER DISTRIBUTOR SUPPORT	1										
	Q307050000	JUNTA TOR.13.94X19.18X2.6	O-RING 13.94X19.18X2.6	1										
	Q012046000	TORNIL. EXAGONAL M6X40 A.304	HEXAGONAL BOLT M6X40 A.304	4										
	Q306050000	ARANDELA Ø6X12X1.5	WASHER Ø6X12X1.5	4										
6	Q307052000	JUNTA TOR.50.17X60.83X5.3	O-RING 50.17X60.83X5.3	2										
7	Q307049000	JUNTA TOR.85.09X95.75X5.3	O-RING 85.09X95.75X5.3	1										
8	Z200906000	CUBETA	TRAY	1										
9	Q881324000	ABRAZADERA 50-70L	CLAMP 50-70L	1										
10	Z200904000	CODO ASPIRACION 1003018	EXTRACTOR ELBOW 1003018	1										
11	Q881307000	ABRAZADERA 40-60	CLAMP 40-60	1										
12	Z201011000	BOMBA DE LAVADO	WASH PUMP	1										
13	Q881307000	ABRAZADERA 40-60	CLAMP 40-60	1										
14	Z200905000	CODO IMPULSION 1003017	IMPULSE ELBOW 1003017	1										
15	Z201002000	SOPORTE MOTOBO.F-3-4-5-6	MOTORPUMP SUPPORT F-3-4-5-6	1										
16	Z201003000	BASE BOMBA LAVADO 1003016	WASH PUMP BASE 1003016	1										
	Q012033000	TORNIL. EXAGONAL M5X20 A.304	HEXAGONAL BOLT M5X20 A.304	2										
	Q232030000	ARANDELA A5	WASHER A5	2										
17	V321300000	CONDENSADOR 10 M.F.	CONDENSER 10 M.F.	1										
	Q307048000	JUNTA TORICA 9.12X16.18X3.53	O-RING 9.12x16.18x3.53	1										
	Q162050000	TUERCA EXAGONAL M8x1 INOX.	HEXAGONAL NUT M8x1 INOX.	1										
	Q261050000	ARANDELA MUELLE A8	SPRING WASHER A8	1										
18	Q881324000	ABRAZADERA 50-70L	CLAMP 50-70L	1										
19	Z200703000	PASAMUROS	BUSHING	1										
	Q232040000	ARANDELA A6	WASHER A6	4										
	Q262040000	ARANDELA GROW. A6 A.304	WASHER GROW. A6 A.304	4										
	Q162040000	TUERCA EXAGONAL M6	HEXAGONAL NUT M6	4										

MOD.	LAVAVAJILLAS DE APERTURA FRONTAL FRONT LOADING DISHWASHER	ZONA / ZONE	PARTE FUNCIONAL LAVADO WASH FUNCTIONAL PART	PLANO DIAGRAM	C-2958

ITEM	CODIGO REFERENCE	DENOMINACION	DENOMINATION	FI-60 DD								ELIMINADO ELIMINATED	INTRODUCID. INTRODUCED	NOTAS
20	Z650711000	AMARRE ENGANCHE DISTRIBUID.	DISTRIBUTOR HOOK FASTENING	2										
	Q152015000	TORNILLO ALOMADO M3X6	CURVED SCREW M3X6	4										
	Q242010000	ARANDELA ABANICO A.3 A304	FAN WASHER A3 A304	4										
21	Z208712000	RAMA DE ACLARADO IZDA. ASPES	LEFT RINSE BRANCH ASPES	2										
22	Q152016000	TORNILLO ESPECIAL M.5X0.8	SPECIAL BOLT M.5X0.8	2										
23	Z200706000	ARBOL DE LAVADO	WASH CAM	1										
24	Q881305000	ABRAZADERA 25-40	CLAMP 25-40	2										
25	Z200707000	SOPORTE DISTRIBUIDOR SUPER.	UPPER DISTRIBUTION SUPPORT	1										
	Q232040000	ARANDELA A6	WASHER A6	4										
	Q162040000	TUERCA EXAGONAL M6	HEXAGONAL NUT M6	4										
26	Q307052000	JUNTA TOR.50.17X60.83X5.3	O-RING 50.17X60.83X5.3	1										
27	Z201903000	SOPORTE RAMAS ACLARADO	RINSE BRANCH SUPPORT	2										
	Q042021000	TORN. AVELLANADO M4X10 A.304	HEXAGONAL COUNTERSUNK M4	4										
28	Z208713000	RAMA DE ACLARADO DCHA ASPES	RIGHT RINSE BRANCH ASPES	2										
29	Z201905000	TOBERA ACLARADO	RINSE NOZZLE	12										
30	Z201906000	ENGANCHE TOBERA ACLA.19728	RINSE NOZZLE HOOK	12										
	Q307036000	JUNTA TORICA 5.28X8.84X1.78	O-RING 5.28X8.84X1.78	12										
31	Z208927000	PASAMUROS DETERGENTE INOX	DETERGENT WALL BUSHING	1										
	Q306024000	JUNTA Ø18X12.5X1.5	SEAL Ø18X12.5X1.5	1										
	Q162070000	TUERCA EXAGONAL M12	HEXAGONAL NUT M12	1										
32	Z208434000	SOPORTE DOSIFICADOR W	DISPENSER SUPPORT W	1										
	Q411304000	REMACHE AVIBULB Ø4,8	AVIBULB RIVET Ø4.8	2										
	Q221342000	REMACHE EXAGONAL M5	HEXAGONAL RIVET M5	2										
	Q012031000	TORNIL.EXAGONAL M5X10 A.304	HEX BOLT M5X10 A.304	2										
	Q232030000	ARANDELA A5	WASHER A5	2										
	Q162030000	TUERCA EXAGONAL M5	HEXAGONAL NUT M5	2										
33	Z208903000	DOSIFIC. DGTE REGULABLE G300	DETERGENT DISP. ADJUST. G300	1										
34	Z448614000	CONDUCTO ASPIRACIÓN	EXTRACTOR PIPE	1										
35	Z701152000	PESO FILTRO	FILTER WEIGHT	1										
36	-	GARRAFA DETERGENTE	DETERGENT CONTAINER	1										
37	3699300000	CONDUCTO DOSIFICAFOR TRANS.	CONDUIT	1										

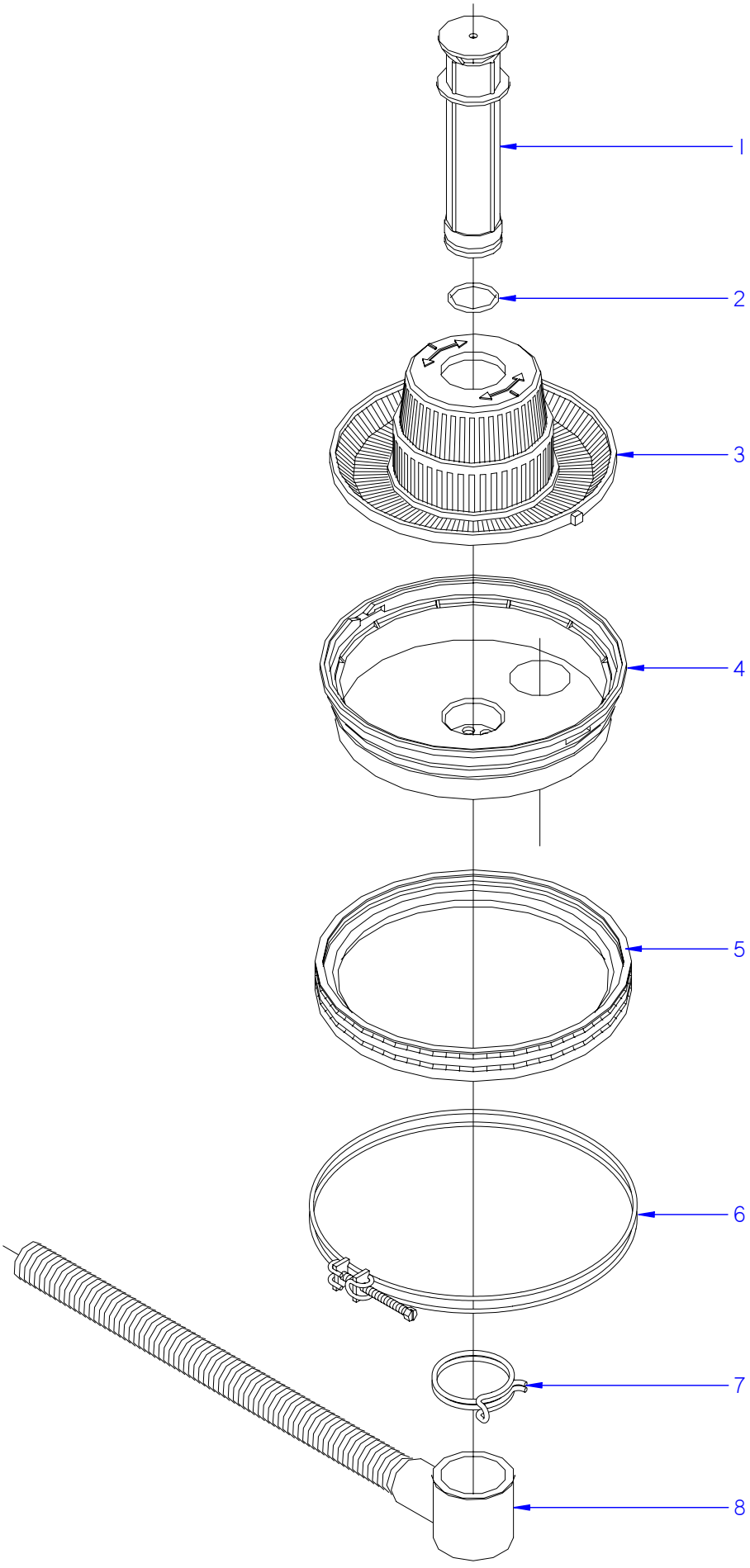

ITEM MARCADO EN COLOR = REPUESTO RECOMENDADO
COLOURED ITEM = RECOMMENDED SPARE PART

Nº plano / N º plane	Firma	Fecha / Date	Denominación / Denomination: FUNCIONAL DESAGÜE / DRAINAGE FUNCTIONAL	Lamina / Sheet	
C-2959		2012-03	LAVAVAJILLAS FI-60 DD	4	Fagor Industrial S.Coop. FAGOR Oñate

MOD.	LAVAVAJILLAS DE APERTURA FRONTAL FRONT LOADING DISHWASHER	ZONA / ZONE	PARTE FUNCIONAL DESAGÜE DRAINAGE FUNCTIONAL PART	PLANO DIAGRAM	C-2959

ITEM	CODIGO REFERENCE	DENOMINACION	DENOMINATION	FI-60 DD								ELIMINADO ELIMINATED	INTRODUCID. INTRODUCED	NOTAS
1	Z200909000	ALIVIADERO	OVERFLOW	1										
2	Q307051000	JUNTA TOR.36.17X41.41X2.6	O-RING 36.17X41.41X2.6	1										
3	Z200922000	CONJUNTO FILTRO AF.	AF FILTER UNIT.	1										
4	Z200906000	CUBETA	TRAY	1										
5	Z200907000	JUNTA CUBETA	TRAY SEAL	1										
6	Z200908000	ABRAZADERA CUBETA COMPL.	COMPL. TRAY CLAMP	1										
7	Q901308000	ABRAZAD. ELAST. 56-58.8	ELAST. CLAMP 56-58.8	1										
8	Z200910000	MANGUERA DESAGUE	DRAINAGE HOSE	1										

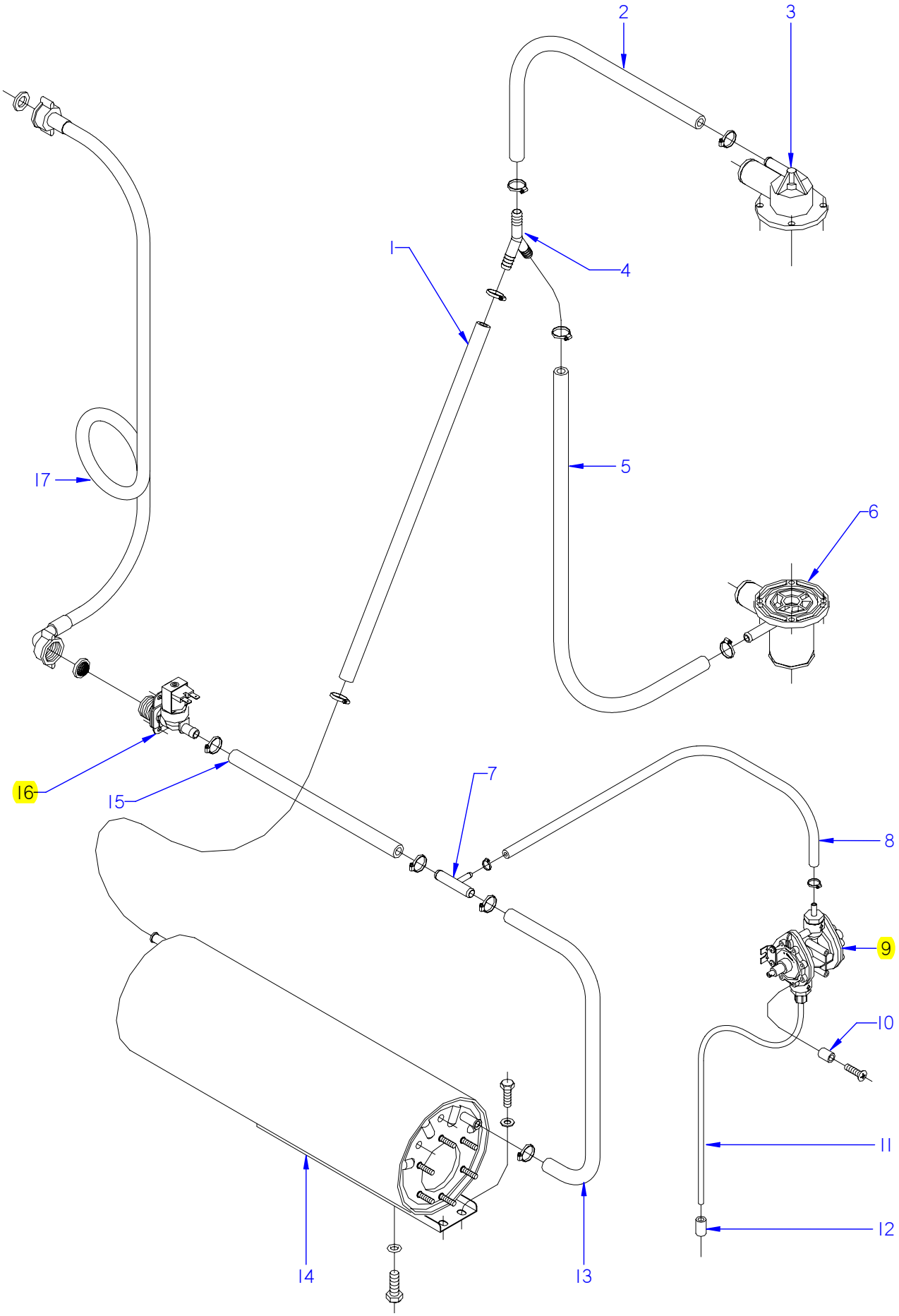

ITEM MARCADO EN COLOR = REPUESTO RECOMENDADO
COLOURED ITEM = RECOMMENDED SPARE PART

Nº plano / N º plane	Firma	Fecha / Date	Denominación / Denomination: FUNCIONAL ACLARADO / RINSE FUNCTIONAL	Lamina / Sheet	
C-2960		2012-03	LAVAVAJILLAS FI-60 DD	5	Fagor Industrial S.Coop. FAGOR Oñate

MOD.	LAVAVAJILLAS DE APERTURA FRONTAL FRONT LOADING DISHWASHER	ZONA / ZONE	PARTE FUNCIONAL ACLARADO RINSE FUNCTIONAL PART	PLANO DIAGRAM	C-2960

ITEM	CODIGO REFERENCE	DENOMINACION	DENOMINATION	FI-60 DD								ELIMINADO ELIMINATED	INTRODUCID. INTRODUCED	NOTAS
1	3676900000	TUBO GOMA NEGRA Ø 17*10	BLACK RUBBER PIPE 17*10	1										
	Q881302000	ABRAZADERA 12-20	CLAMP 12-20	2										
2	3676900000	TUBO GOMA NEGRA Ø 17*10	BLACK RUBBER PIPE 17*10	1										
	Q881302000	ABRAZADERA 12-20	CLAMP 12-20	2										
3	Z200707000	SOPORTE DISTRIB. SUPERIOR	UPPER DISTRIB. SUPPORT	1										
4	Z201106000	RACORD EN Y	Y-CONNECTION	1										
5	3676900000	TUBO GOMA NEGRA Ø 17*10	BLACK RUBBER PIPE 17*10	1										
	Q881302000	ABRAZADERA 12-20	CLAMP 12-20	2										
6	Z200703000	PASAMUROS	BUSHING	1										
7	Z601157000	TOMA PRESION	PRESSURE INTAKE	1										
8	3704000000	TUBO GOMA NEGRO D 10,5*5	BLACK RUBBER PIPE Ø 10.5*5	1										
	Q881308000	ABRAZADERA 8-14L	CLAMP 8-14L	2										
9	Z211109000	DOSIFICADOR TENSOACTIVO N-6	SURFACE ACTIVE DISPENSER	1								18.06.12		
9	12045206	DOSIFICADOR_ABRILLANTADOR_A	RINSE AID DISPENSER	1									18.06.12	
10	Z203007000	CASQUILLO	BUSHING	2										
	Q041324000	TORN. AVELLA. M4x25 H.ZINCADO	COUNTERSUNK NUT M4x25 H.ZIN	2										
11	Z448618000	CONDUCTO ABRILL AZUL COMPL	CROCKERY POLISHER PIPE	1										
12	Z701152000	PESO FILTRO	FILTER WEIGHT	1										
13	3676900000	TUBO GOMA NEGRA Ø 17*10	BLACK RUBBER PIPE 17*10	1										
	Q881302000	ABRAZADERA 12-20	CLAMP 12-20	2										
14	Z201710000	CALDERIN COMPLETO	COMPLETE DRUM	1										
	Q012031000	TORNIL. EXAGONAL M5x10 A.304	HEXAGONAL BOLT M5x10 A.304	2										
	Q232030000	ARANDELA A5	WASHER A5	2										
15	3676900000	TUBO GOMA NEGRA Ø 17*10	BLACK RUBBER PIPE 17*10	1										
	Q881302000	ABRAZADERA 12-20	CLAMP 12-20	2										
16	Z701135000	ELECTR. SIMP.220V COD.255.208	SOLENOID VALVE SIMP.220V CO	1										
	Q152024000	TORN. AVELLANADO M4x8 A.304	HEXAGONAL COUNTERSUNK M4	2										
17	Z602121000	MANGUERA ENTRADA AGUA	WATER INTAKE HOSE	1										

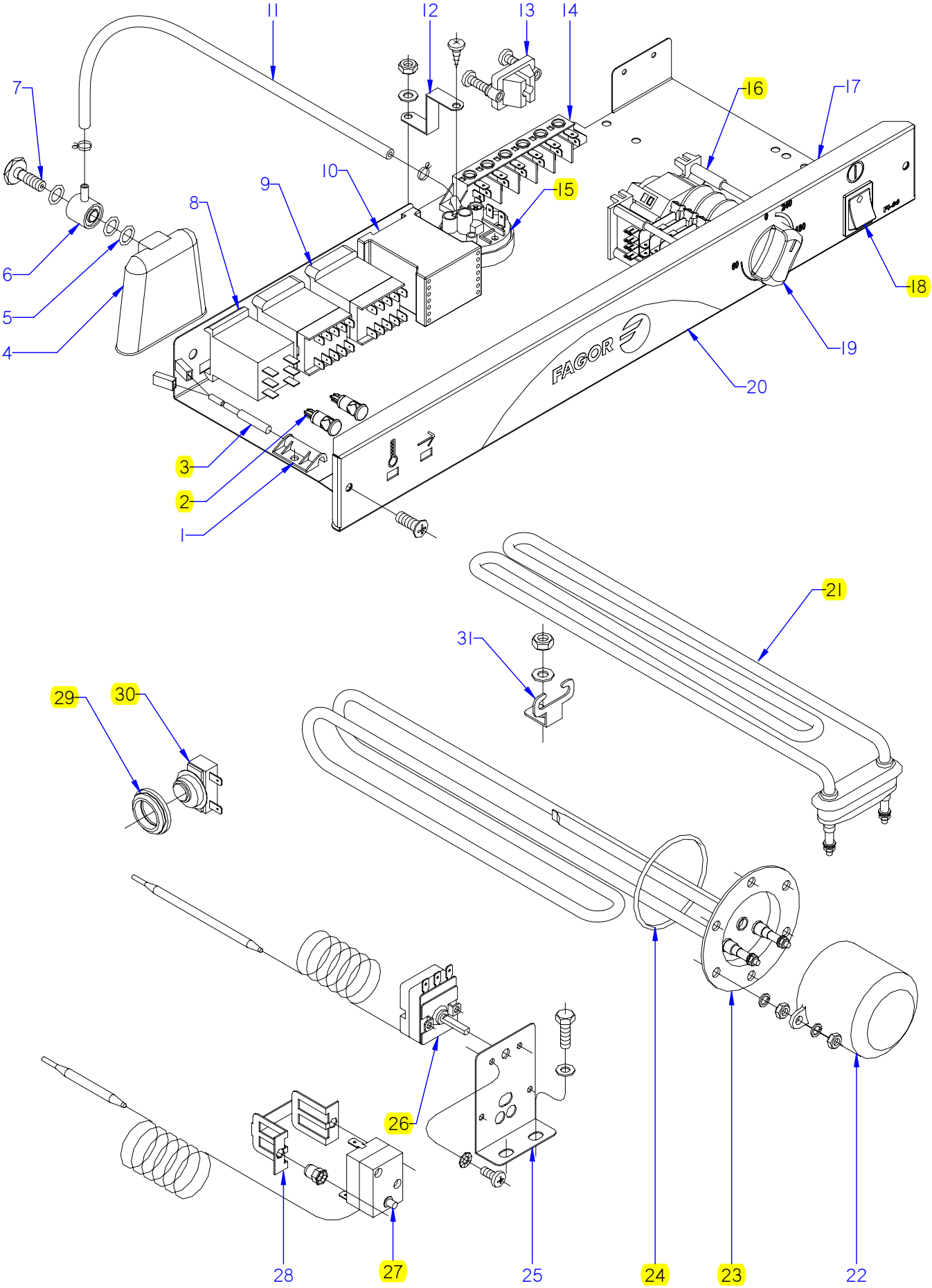

ITEM MARCADO EN COLOR = REPUESTO RECOMENDADO
COLOURED ITEM = RECOMMENDED SPARE PART

Nº plano / N º plane	Firma	Fecha / Date	Denominación / Denomination: FUNCIONAL ELECTRICA / ELECTRICS FUNCTIONAL	Lamina / Sheet	
C-2961		2012-03	LAVAVAJILLAS FI-60 DD	6	Fagor Industrial S.Coop. FAGOR Oñate

MOD.	LAVAVAJILLAS DE APERTURA FRONTAL FRONT LOADING DISHWASHER	ZONA / ZONE	PARTE FUNCIONAL ELECTRICA ELECTRICS FUNCTIONAL PART	PLANO DIAGRAM	C-2961

ITEM	CODIGO REFERENCE	DENOMINACION	DENOMINATION	FI-60 DD								ELIMINADO ELIMINATED	INTRODUCID. INTRODUCED	NOTAS
1	Z203010000	AMARRE INTERRUP. MAGNETICO	MAGNETIC SWITCH FASTENER	1										
	Q152004000	TORNIL, APLASTADO M5x13 A304	FLAT HEADED BOLT M5x13 A304	1										
	Q232030000	ARANDELA A5	WASHER A5	1										
	Q162030000	TUERCA EXAGONAL M5	HEXAGONAL NUT M5	1										
2	R693056000	PILOTO AMBAR 41227000A4	AMBER PILOT 41227000A4	2										
3	Z203009000	INTERRUPTOR MAGNETICO	MAGNETIC SWITCH	1										
4	Z203011000	CAMARA PRESOSTATO	PRESSURE SWITCH	1										
5	Q307003000	JUNTA TORICA 16.01X10.77X2.62	O-RING 16.01X10.77X2.62	3										
6	Z203012000	EMPALME PRESOSTATO	PRESSURE SWITCH CONNEX	1										
7	Z203013000	TORNILLO PRESOSTATO	PRESSURE SWITCH BOLT	1										
8	Z203062000	RELE 230V. 16A 50-60 HZ	RELAY 230V. 16A 50-60 HZ	1										
	Q162050000	TUERCA EXAGONAL M8x1 INOX.	HEXAGONAL NUT M8x1 INOX.	1										
9	Z213007000	CONTACTOR 230 V. 50-60 HZ	CONTACTOR 230 V. 50-60 HZ	2										
10	Z203050000	CONTACTOR SIRIUS 3R 230V50-60	CONTACTOR SIRIUS 3R 230V50-6	1										
11	3702400000	TUBO GOMA NEGRO Ø 8*4	BLACK RUBBER PIPE Ø 8*4	1										
	P102154000	BRIDA ELASTICA TUBO	ELASTIC PIPE FLANGE	2										
12	Z602923000	SOPORTE PRESOSTATO	PRESSURE SWITCH SUPPORT	1										
	Q082032000	TORNILLO ALOMADO BZ-3,5X9,5	CURVED SCREW BZ-3.5x9.5	1										
	Q152004000	TORNILLO APLASTADO M5x13	FLAT HEAD SCREW M5X13	1										
	Q232030000	ARANDELA A5	WASHER A5	1										
	Q162030000	TUERCA EXAGONAL M5	HEXAGONAL NUT M5	1										
13	Z203020000	RETENEDOR DE CABLE	CABLE HOLDER	1										
14	R253044000	REGLETA AUXILIAR FV-122	AUXILIARY TERMINAL STRIP FV-1	1										
	Z213005000	ROTULO ADHESIVO	ADHESIVE LABEL	1										
	Q152004000	TORNILLO APLASTADO M5x13	FLAT HEAD SCREW M5X13	2										
	Q232030000	ARANDELA A5	WASHER A5	2										
	Q162030000	TUERCA EXAGONAL M5	HEXAGONAL NUT M5	2										
15	Z203023000	PRESOSTATO SIMPLE PVS	SIMPLE PVS PRESSURE SWITCH	1										

MOD.	LAVAVAJILLAS DE APERTURA FRONTAL FRONT LOADING DISHWASHER	ZONA / ZONE	PARTE FUNCIONAL ELECTRICA ELECTRICS FUNCTIONAL PART	PLANO DIAGRAM	C-2961

ITEM	CODIGO REFERENCE	DENOMINACION	DENOMINATION	FI-60 DD								ELIMINADO ELIMINATED	INTRODUCID. INTRODUCED	NOTAS
16	Z203030000	PROGRAMADOR CICLO 50 HZ	CYCLE PROGRAMMER 50 HZ	1										
	Q032021000	TORNILLO ALOMADO M4x10	CURVED SCREW M4X10	2										
	Q162020000	TUERCA EXAGONAL M4	HEXAGONAL NUT M4	2										
	Z203007000	CASQUILLO	BUSHING	2										
	Q041324000	TORN. AVELLA. M4x25 H.ZINCADO	COUNTERSUNK NUT M4x25 H.ZIN	2										
17	Z202918000	FRENTE COMPLETO	COMPLETE FRONT	1										
	Q152004000	TORNILLO APLASTADO M5x13	FLAT HEAD SCREW M5X13	2										
	3713500000	PERFIL CUBREARISTAS PLASTICO	PLASTIC EDGE COVER PROFILE	1										
18	Z203071000	INTERRUPTOR NEGRO	SWITCH BLACK	1										
19	Z203069000	BOTON DE MANDO	CONTROL BUTTON	1										
20	Z248902000	EMBELLECEDOR ADHESIVO FI-60	ADHESIVE TRIM FI-60	1										
21	Z203601000	RESISTENCIA TANQUE	TANK RESISTOR	1										
22	Z101723000	CAPERUZA RESISTEN. CALDERIN	DRUM RESIST. CAP	1										
	Q163140000	TUERCA EXAGONAL M6 LATON	HEXAGONAL NUT M6 BRASS	2										
	Q012031000	TORNIL. EXAGONAL M5x10 A.304	HEXAGONAL BOLT M5X10 A.304	2										
	Q232030000	ARANDELA A5	WASHER A5	2										
23	Z241701000	RESISTENCIA CALDERIN	DRUM RESISTOR	1										
	Q221305000	TUERCA EX.AUTO M4 ZINCADA	EX.AUTO NUT M4 ZINC-COATED	6										
	Q163140000	TUERCA EXAGONAL M6 LATON	HEXAGONAL NUT M6 BRASS	6										
	Q262040000	ARANDELA GROW. A6 A.304	WASHER GROW. A6 A.304	6										
24	Q307035000	JUNTA TORICA AN-36 282333	O-RING AN-36 282333	1										
25	Z203047000	SOPORTE TERMOSTATOS	THERMOSTAT SUPPORT	1										
	Q012031000	TORNIL. EXAGONAL M5X10 A.304	HEXAGONAL BOLT M5X10 A.304	2										
	Q232030000	ARANDELA A5	WASHER A5	2										
26	Z203014000	TERMOSTATO CALDERIN	WASH DRUM THERMOSTAT	1								01.11.12		
26	12040858	TERMOSTATO CALDERIN	WASH DRUM THERMOSTAT	1									01.11.12	
27	Z213014000	LIMITADOR TECASA P.	LIMITER TECASA P.	1										
28	Z203060000	AMARRE LIMITADOR TECASA	LIMITER FASTENING TECASA	1										
	Q221341000	REMACHE EXAGONAL M4	HEXAGONAL RIVET M4	2										
	Q152024000	TORNIL. AVELLANADO M4X8 A304	COUNTERSUNK BOLT M4X8 A304	2										
29	N503017000	SOPORTE TERMOSTATO 1001713	THERMOSTAT SUPPORT 1001713	1										

MOD.	LAVAVAJILLAS DE APERTURA FRONTAL FRONT LOADING DISHWASHER	ZONA / ZONE	PARTE FUNCIONAL ELECTRICA ELECTRICS FUNCTIONAL PART	PLANO DIAGRAM	C-2961

ITEM	CODIGO REFERENCE	DENOMINACION	DENOMINATION	FI-60 DD								ELIMINADO ELIMINATED	INTRODUCID. INTRODUCED	NOTAS
30	Z718405000	TERMOSTATO DOBLE	DOUBLE THERMOSTAT	1										
31	Z603602000	SOPORTE RESISTENCIA TANQUE	TANK RESISTOR SUPPORT	1										
	Q232040000	ARANDELA A6	WASHER A6	1										
	Q162040000	TUERCA EXAGONAL M6	HEXAGONAL NUT M6	1										

MOD.	LAVAVAJILLAS DE APERTURA FRONTAL FRONT LOADING DISHWASHER	ZONA / ZONE	VARIOS / MISCELLANEOUS	PLANO DIAGRAM	

ITEM	CODIGO REFERENCE	DENOMINACION	DENOMINATION	FI-60 DD								ELIMINADO ELIMINATED	INTRODUCID. INTRODUCED	NOTAS
	Z206131000	FOLLETO DE INSTRUCCIONES	INSTRUCTION LEAFLET	1										
	Z203075000	ESQUEMA TEORICO FI-60	THEORETICAL DIAGRAM FI-60	1										PLANO HC-17890
	Z203076000	PLANO DE MONTAJE FI-60	ASSEMBLY PLAN FI-60	1										PLANO HC-17895
	Z243051000	LEYENDA LAVAVAJ.APER. FRONTA	LEGEND FRONT LOADING DISH.	1										PLANO HC-17900
	Z243046000	INSTALACION ELECTRICA FI-64	ELECTRIC INSTALLATION FI-64	1										
	Z208913000	CABLE ALIMENTACION TRIFASIC 2	TRIFASIC 2,5 SUPPLY CABLE	1										
	Z208904000	CABLEADO DOSIFICADOR DTGTE	DETERGENT DISP. WIRING	1										

FI-60 LF-600 M

380 - 415 V. 3NPh

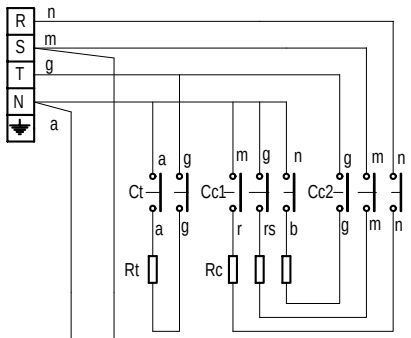

208-220-240 V. 3Ph

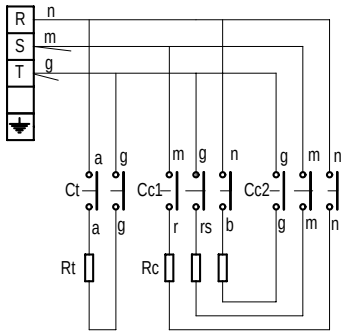

208-220-240 V. 1Ph

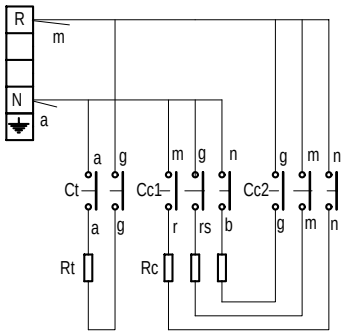

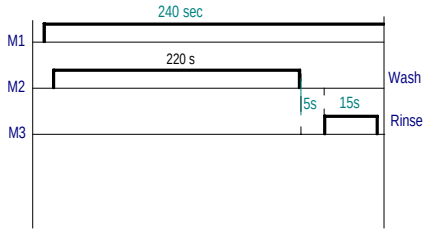

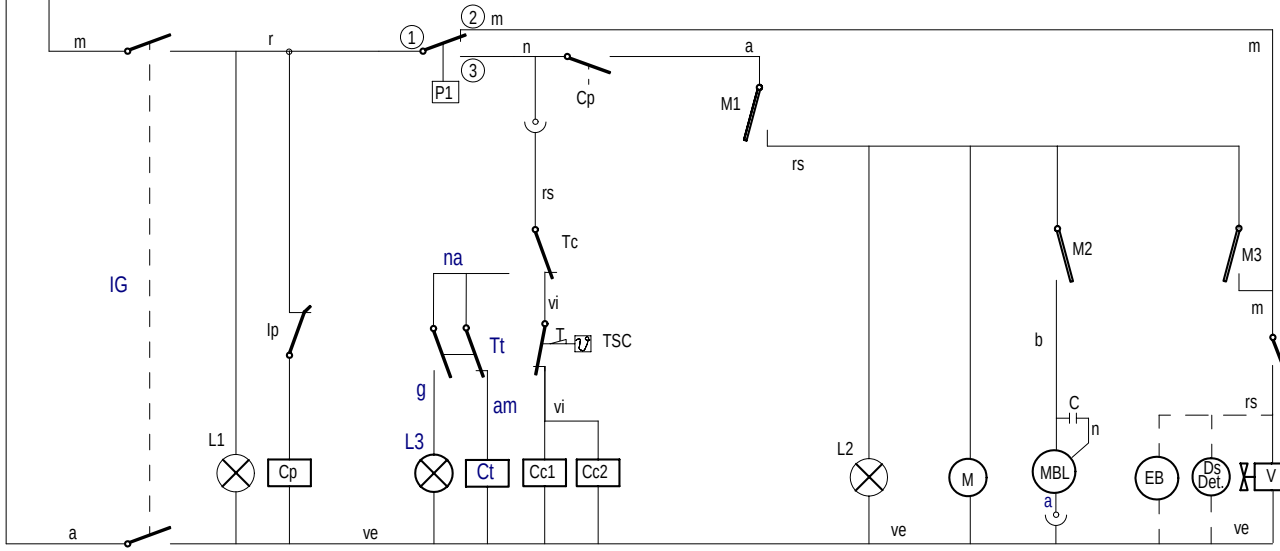

Z203075000

	Esquema Teorico FI-60		Z203075000		
Nº	Pieza	Material	Nº Clasificacion	Acabado	
Nº	Modificacion	Propuesta de	Fecha	Tolerancias generales	
1	LF-600 M modeloa sartu	rbenito	2008-02-07	<5 ± : 5–25 ± : 25–50 ± : 50–100 ± : >100 ± : ○ ±	

	Firma	Fecha
Dibujado	M.Maillo	07-10-2005
Proyectado	M.Maillo	07-10-2005
Comprobado	ENERITZ	07-10-2005
Escala		

FAGOR

Fagor Industrial,Koop.Elk, Mugatua

Mecanizado superficial

LAVAVAJILLAS

Plano numero HC-17890-1

Sustituye al Nº

Sustituido por

Plano hau ez daiteke erabili ez berrizta gure baimenitz gabe

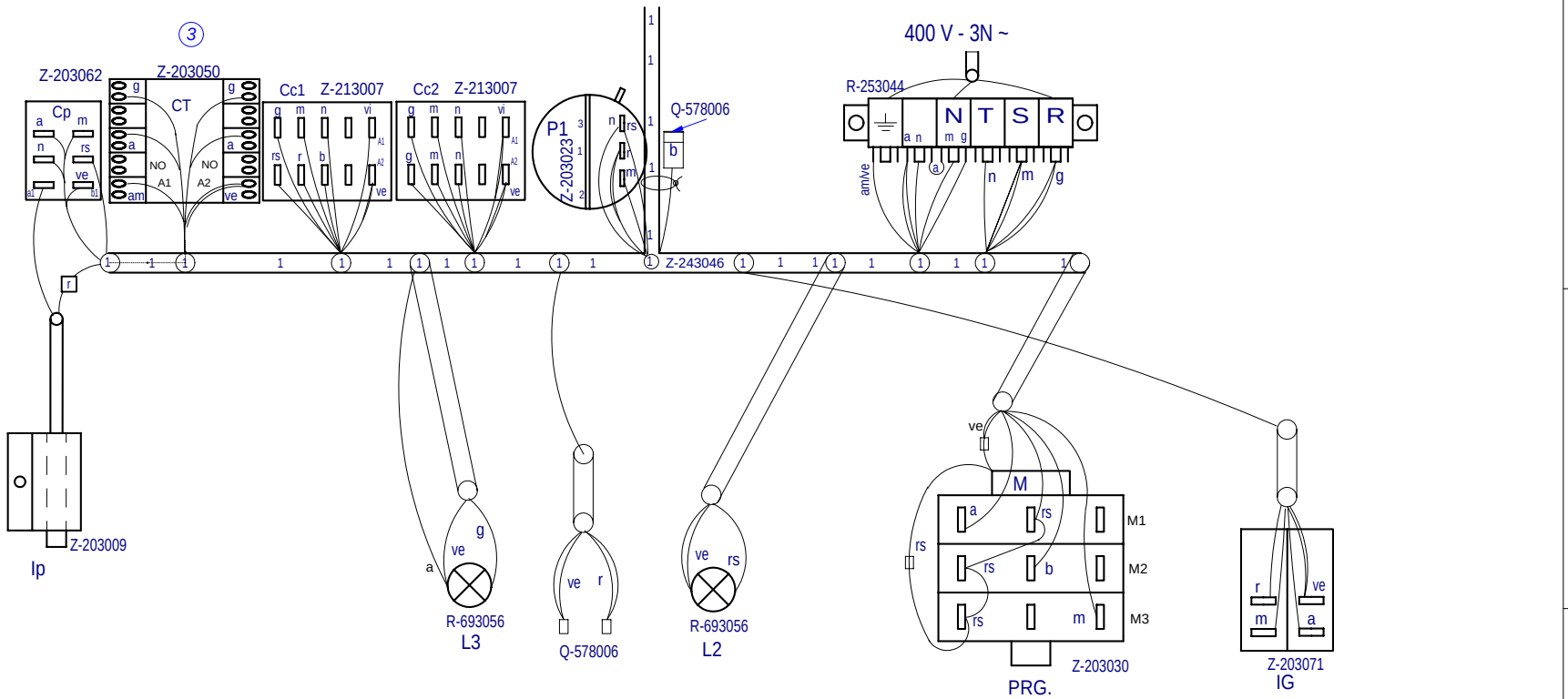

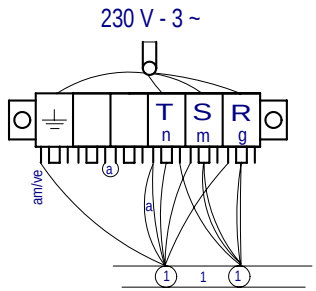

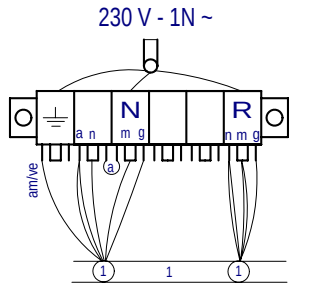

ESQUEMA TEORICO	Z-203075
LEYENDA	Z-243051
INDICADOR DE COMPONENTES	Z-713034

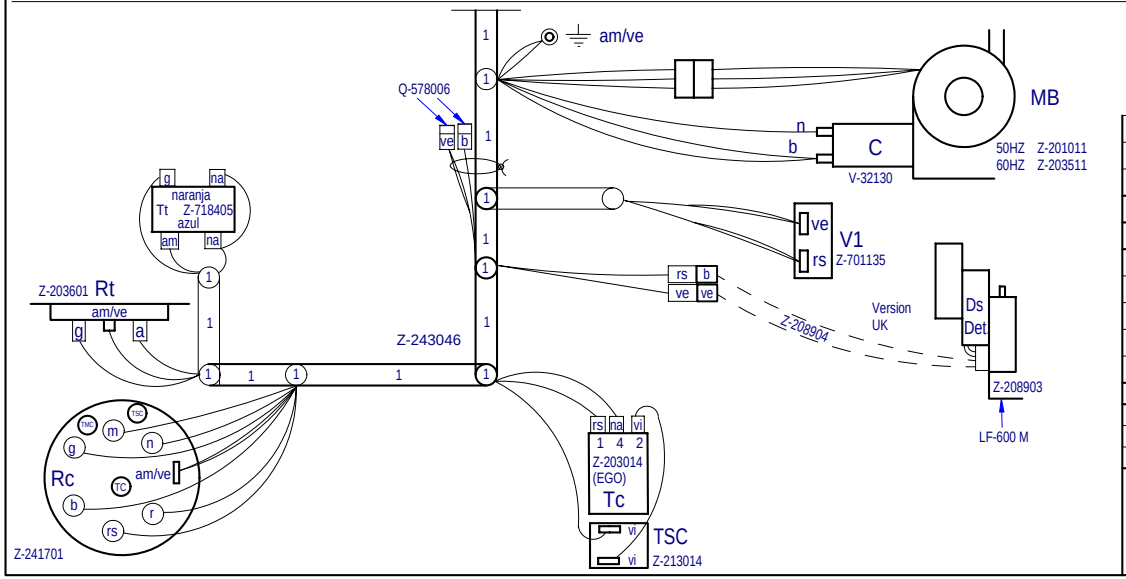

	Plano montaje FI-60, LF-600 M		Z203076000		
Nº	Pieza	Material	Nº Clasificacion	Acabado	
Nº	Modificacion	Propuesta de	Fecha	Tolerancias generales	
1	Correccion nueva estetica Fagor	scaro	2006-11-30		
2	P2 eta BD konektatzen duen kablearen kolorea aldatuta (vi ==> b)	ecarrascal	2007-11-28		
3	Aldatu tankeko kontaktorea Z213007 --> Z203050	scaro	2008-11-01		

	Firma	Fecha
Dibujado	M.Maillo	07-10-2005
Proyectado	M.Maillo	07-10-2005
Comprobado	ENERITZ	07-10-2005
Escala		

FAGOR

Fagor Industrial,Koop.Elk, Mugatua

Mecanizado superficial

LAVAVAJILLAS

Plano hau ez daiteke erabil ez berrizta gure baimenitz gabe

Plano numero
HC-17895-3

Sustituye al Nº

Sustituido por

LEYENDA APERTURA FRONTAL

	ESPAÑOL	FRANÇAIS	ENGLISH	DEUTSCH	ITALIANO
BD	Bomba desagüe	Pompe de vidange	Drain pump	Abflußpumpe	Pompa scarico
C 1/2/3	Condensador	Condensateur	Condenser	Kondensator	Condensatore
CMB	Contactor bomba lavado	Contacteur pompe lavage	Wash pump contactor	Kontaktschütz Waschpumpe	Contattore pompa lavaggio
Cc 1/2	Contactor calentamiento calderin	Contacteur chauf. surchauffeur	Boiler heating contactor	Kontaktschütz Boilerheizung	Contattore riscaldamento boiler
Ct	Contactor calentamiento tanque	Contacteur chaufage cuve	Tank heating contactor	Kontaktschütz Heizung Tank	Contattore riscaldamento serbatoio
CP	Rele puerta	Relais porte	Door relay	Türrelais	Rele porta
Ds.Det.	Dosificador detergente	Dosseur de detergent	Detergent doser	Dosierer Spülmittel	Dosatore detersivo
E.B	Electrobomba de presion	Electropompe de pression	Electric pressure pump	Elektro-Drucksteigungspumpe	Electropompa pressione
IG	Interruptor general	Interrupteur general	Main switch	Hauptschalter	Interruttore generale
IP	Micro puerta	Micro porte	Door microswitch	Mikroschalter Tür	Micro porta
L1	Piloto de encendido	Voyant funcionement	Operation light	Betriebsanzeigelampe	Spia accensione
L2	Piloto marcha	Voyant demarrage	Start light	Startanzeigelampe	Spia avvio
L3	Piloto maquina preparada	Voyant machine prêt	Light machine ready	Betriebsbereitschaftsanzeigelampe	Pilota macchina preparata
MBL	Bomba lavado	Pompe lavage	Wash pump	Waschpumpe	Pompa lavaggio
M	Motor programador	Moteur du programmateur	Motor programmer	Motor Programmiervorrichtung	Motore programmatore
M Av. R	Motor program. avance rapido	Moteur du progr.avance rapide	Motor program. rapid advance	Motor Programmiervorrich. schneller Vorlauf	Motore programmatore avanzamento rapido
M1	Micro programador marcha	Micro du programm. de marche	Micro programmer on	Motor Programmiervorrich. Betrieb	Micro programma. di funzionamento
M2	Micro programador lavado	Micro du programm. de lavage	Micro programmer wash	Motor Programmiervorrich. Waschen	Micro programmatore di lavaggio
M3	Micro programador aclarado	Micro du programm. de rinçage	Micro programmer on	Motor Programmiervorrich. Spülen	Micro programmatore di risciacquo
M4	Micro programador Termo-stop	Micro du programm. Termo-stop	Micro programmer Termo-stop	Motor Programmiervorrich. Thermo-Stop	Micro programmatore Termo-stop
M5	Micro programador avance	Micro du programm. avance	Micro programmer advance	Motor Programmiervorrich. Vorlauf	Micro programmatore avanzamento
P, P1, P5	Presostato	Pressostat	Pressure switch	Druckwächter	Pressostato
P2, P3, P4	Presostato limitador	Pressostat de securité	Hi-limit pressure switch	Begrenzer Druckwächter	Pressostato limitatore
RC	Resistencia calderin	Resistance surchauffeur	Boiler heating element	Heizwiderstand Boiler	Resistenza boiler
RT	Resistencia tanque	Resistance cuve	Tank heater	Heizwiderstand Tank	Resistenza serbatoio
Tt	Termostato tanque	Thermostat de cuve	Tank thermostat	Thermostat Tank	Termostato serbatoio
TC	Termostato calderin	Thermostat surchauffeur	Boiler thermostat	Thermostat kessel	Termostato boiler
TSC	Limitador calderin	Limiteur surchauffeur	Boiler Hi-limit	Begrenzer Boiler	Limitatore boiler
TSTP	Termostato termo-stop	Thermostat Termo-stop	Termo-stop Thermostat	Thermostat Termo-stop	Termostato Termo-stop
V	Electrovalvula llenado y aclarado	Electrovan. remplissage rinçage	Fill and rinse valve	Elektroventil Füllen und Spülen	Elettroval. riempimento e risciacquo
COLOR	COLORES	COULEURS	COLOUR	FARBEN	COLORE
a =	Azul	Bleu	Blue	Blau	Blu
am =	Amarillo	Jaune	Yellow	Gelb	Giallo
am/ve =	Amarillo/verde	Jaune / vert	Yellow / green	Gelb/grün	Giallo/verde
b =	Blanco	Blanc	White	Weiß	Bianco
g =	Gris	Gris	Grey	Grau	Grigio
m =	Marrón	Marron	Brown	Braun	Marrone
n =	Negro	Noir	Black	Schwarz	Nero
na =	Naranja	Orange	Orange	Orange	Arancio
r =	Rojo	Rouge	Red	Rot	Rosso
rs =	Rosa	Rose	Pink	Rosa	Roseo
ve =	Verde	Vert	Green	Grün	Verde
vi =	Violeta	Violet	Purple	Violett	Viola

Z243051000