ARMARIO SNACK DE REFRIGERACIÓN CONCEPT / SNACK CABINET COOLING CONCEPT

CAFP-701 19029670 / CAFP-702 19029671

CAEP-701 19029723 /

CAFN-701 19029686 / CAFN-702 19029688

FAGOR

Versión 2014-10

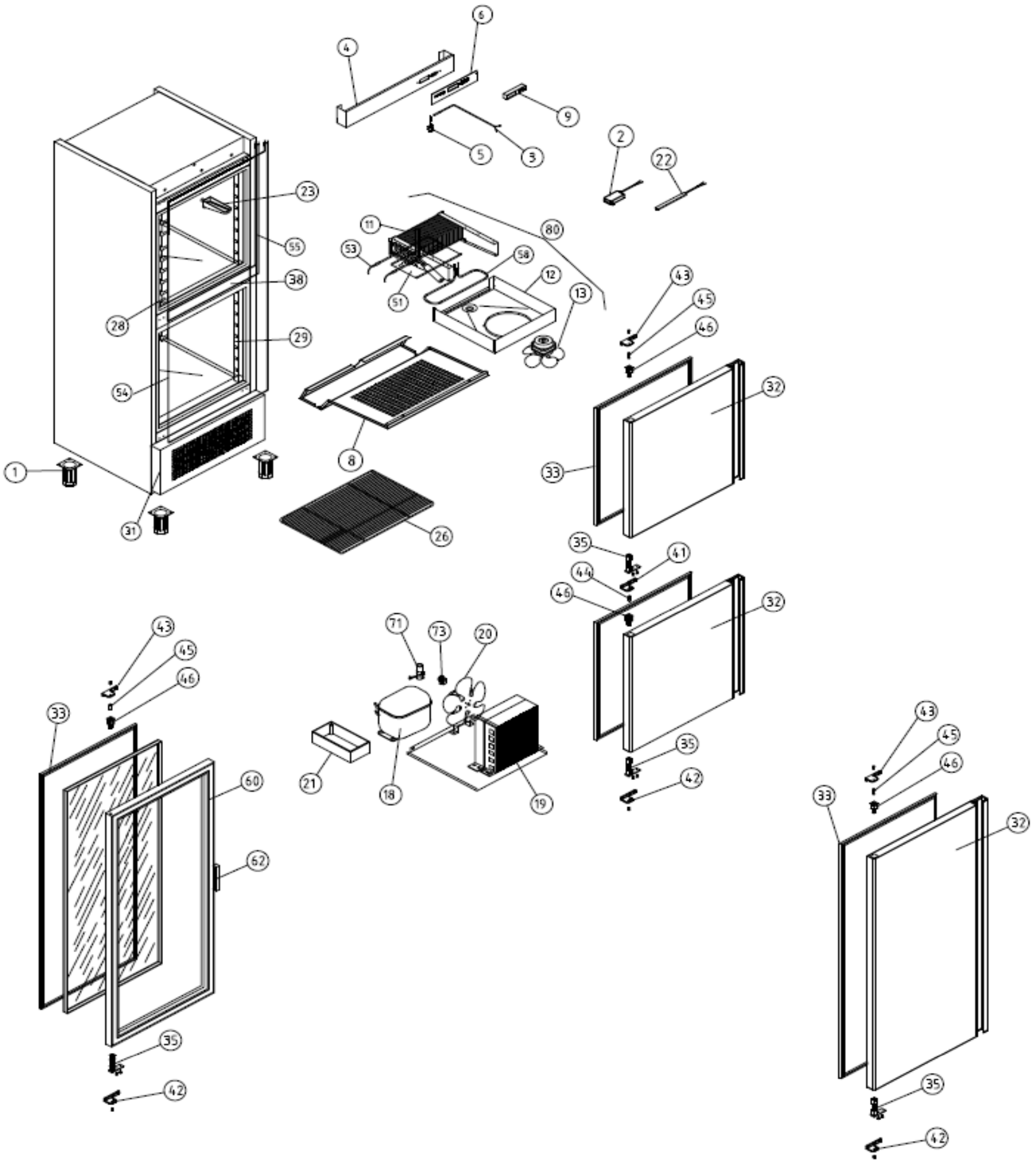

ARMARIO SNACK DE REFRIGERACIÓN CONCEPT / SNACK CABINET COOLING CONCEPT

CAF-702 C 19029697

CAF-702 P 19029709

FAGOR

Versión 2014-10

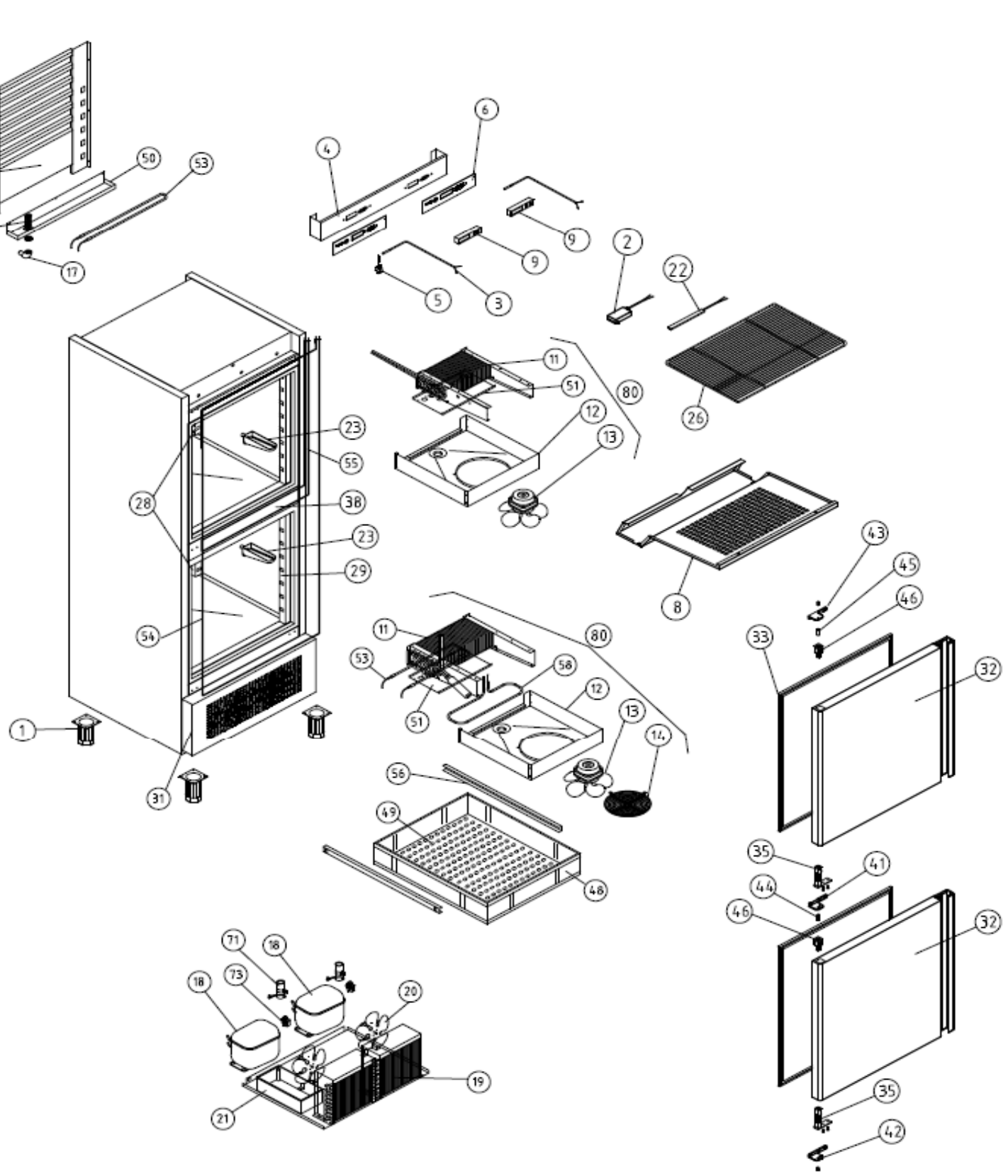

ARMARIO SNACK DE REFRIGERACIÓN CONCEPT / SNACK CABINET COOLING CONCEPT

CAFP-701 19029670 / CAFP-702 19029671

CAEP-701 19029723

CAFN-701 19029686 / CAFN-702 19029688

FAGOR

Versión 2014-10

Nº	CODE CÓDIGO	RECOM.	DESCRIPCIÓN	DESCRIPTION	CAFP-701	CAFP-702	CAEP-701	CAFN-701	CAFN-702
1	12033566		PATA REGULABLE ARM.GASTRO	GASTRO CABINET ADJUSTABLE LEG	4	4	4	4	4
2	12103609		FUENT APV-16-24 115-230 50/60Hz 24V 16W	APV-16-24 115-230 50/60Hz 24V 16W SOURCE	1	1	1		
3	12045530		SONDA NTC 2,5 MTS	THERMOSTAT PROBE	1	1	1	2	2
4	12111200		CABEZA AFP-700 FAGOR CONCEPT	HEAD AFP-700 CONCEPT	1	1	1	1	1
5	12036888		MICROR.CONMUT.E3111CA	MICROR.CONMUT.E3111CA	1	1	1	1	1
6	12104752		ADHESIVO G. CONCEPT PWC	PWC CONCEPT RANGE STICKER	1	1	1	1	1
8	12112674		TAPA EVAPORADOR	EVAPORATOR COVER	1	1	1	1	1
9	12043611		TERMOSTATO POWER COMPAC REFRIG	POWER COOLING THERMOSTAT COMPAC	1	1	1		
9	12040693		TERMOSTATO POWER COMPAC CONG.	FREEZER POWER COMPACT THERMOSTAT				1	1
11	12045174		EV. FC71B RH, 7T4R295A6S PINT.	EV. FC71B RH, 7T4R295A6S PINT.	1	1	1		
11	12048802		BAT. 6T 4R 300A 6S 2 CIRCUITO	BAT. 6T 4R 300A 6S 2 CIRCUITO				1	1
12	12070041		TAPA EVAPORADOR ARMARIOS	EVAPORATOR COVER CABINETS	1	1	1	1	1
13	12034545		VENTIL.EVAPOR.5W S/ARO S/PATAS	EVAPORATOR FAN 5w	1	1	1	1	1
18	12028976		COMPRES.FR-8.5-G R134A	COMPRES.FR-8.5-G R134A	1	1	1		
18	12027322		COMPR.SC-15-CL R-404a	COMPR.SC-15-CL R-404a				1	1
19	12030739		CONDENSADOR VENTILADO 139	CONDENSADOR VENTILADO 139				1	1
19	12032903		CONDENSADOR 9X2	CONDENSADOR 9X2	1	1	1		
20	12033477		VENT. 10w H84 Ø254 22º	FAN 10w H84 Ø254 22º	1	1	1		
21	12036623		BANDEJA EVAPORACIÓN AUTOMÁTICA	AUTO PAN EVAPORATION	1	1	1	1	1
22	12117149		TIRA LED T3-270-3014-868.16-CW24V DC 2mt	T3-270-3014-868.16-CW24V DC 2mt LED STRIP	1	1	1		
23	12037375		CANALIZADOR AGUA 150 GRIS REFRIGERACION	REFRIGERATION GREY 150 WATER DRAINAGE	1	1	1		
23	12037314		CANALIZADOR AGUA 150 NEGRO MANT.CONGEL.	FREEZER BLACK 150 WATER DRAINAGE				1	1
26	12034317		PARRILLA 560x542 AR.SNACK	GRILL 560x542 CABINET SNACK	3	3	3	3	3
28	12034579		CREMALL.INT.AFP-SNACK	CREMALL.INT.AFP-SNACK	2	2	2	2	2
29	12034241		CREMALL.DEL.DCH.AFP-SNACK	CREMALL.DEL.DCH.AFP-SNACK	1		1		1
29	12034240		CREMAL.DEL.IZD.AFP-SNACK	CREMAL.DEL.IZD.AFP-SNACK	1		1		1
29	12035502		CREM.DELANT.DCH.PEQ.AFP	CREM.DELANT.DCH.PEQ.AFP		2		2	
29	12035504		CREM.DELANT.IZD.PEQ.AFP	CREM.DELANT.IZD.PEQ.AFP		2		2	
31	12069216		REJILLA MOTOR 700 CONCEPT	GRID MOTOR 700 CONCEPT	1	1	1	1	1
32	12083604		PUE PEQ AFP CONCEPT IZD	PUE PEQ AFP CONCEPT IZD		2		2	
32	12083602		PUE CARN AFP/AFN CONCEPT IZD	PUE CARN AFP/AFN CONCEPT IZD	1				1
33	12038148		BURLETE ARMARIO PUERTA CARNICERA	CABINET DOOR GASKET BUTCHER	1		1		1
33	12038144		BURLETE ARMARIO PUERTA PEQUEÑA	SMALL CABINET DOOR GASKET		2		2	
35	12038130		BIS.TRS1D DOBL MUELLE DV-2608	BIS.TRS1D DOBL MUELLE DV-2608	1	2	1	2	1
38	12083394		FRONTI HORZ.POST.AFP MAGNETICO	MAGNETIC HORZ.POST.AFP FRONTI		1		1	
41	12036776		SOP.BISAG. INF IZQ. FRES	INF SOP.BISAG LEFT. FRES		1		1	
42	12036986		SOP.BISAG.INF.IZD.	LEFT LOW HINGE SUPPORT	1	1	1	1	1
43	12041474		SOPORTE SUPERIOR BISAGRA IZQUIERDO	LEFT TOP HINGE SUPPORT	1	1	1	1	1
44	12037138		EJE ROSCA EXT.30X10INOX	THREADED SHAFT EXT.30X10INOX		1		1	
45	12038076		EJE SUP. PUERTAS 30x10 VARILLA INOX.INT. M-6	SUP HUB. 30x10 ROD DOORS INOX.INT. M-6	1	1	1	1	1
46	12037723		CAJA ALOJAMIENTO MUELLE GRIS	GREY SPRING HOUSING BOX	1	2	1	2	1
51	12044961		CUBRER.EVAP.FC61B ARM.	CUBRER.EVAP.FC61B ARM.				1	1
53	12034637		RESIST.BLIND.FC61-71 350W 1000	RESIST.BLIND.FC61-71 350W 1000				1	1
54	12036014		RESIST.MARCO EXT.700/800 43W	RESIST.MARCO EXT.700/800 43W				1	1
55	12036316		RESIST.FRONTI H.1400-1600 12W	RESIST.FRONTI H.1400-1600 12W				1	
58	12036313		RESIST.BANDEJA 700-20W	RESIST.BANDEJA 700-20W				1	1
60	12045918		PUERTA CRISTAL ARMARIO	GLSS DOOR CABINET			1		
62	12068289		TIRAD. PT. CRISTAL	GLASS DOOR HANDLE			1		
71	12018649		COND.ARRANQ.SC 117U5017 80MF	COND.ARRANQ.SC 117U5017 80MF				1	1
71	12033454		CONDEN.ARRANQUE FR-117U5015 80 mF	CONDEN.ARRANQUE FR-117U5015 80 mF	1	1	1		
73	12034983		RELE ARRANQ COMPR.SC-15CL 6019	RELAY ARRANQ COMPR.SC-15CL 6019				1	1
73	12034947		RELE ARRANQUE COMPRESOR FR-8,5G 2	RELAY ARRANQUE COMPRESOR FR-8,5G 2	1	1	1		
80	12115882		UD.EVAP.AFP-700	UD.EVAP.AFP-700	1	1	1		
80	12083710		UD. EV. AFN-700	UD. EV. AFN-700				1	1

ARMARIO SNACK DE REFRIGERACIÓN CONCEPT / SNACK CABINET COOLING CONCEPT

CAF-702 C 19029697

CAF-702 P 19029709

FAGOR

Versión 2014-10

Nº	CODE CÓDIGO	RECOM.	DESCRIPCIÓN	DESCRIPTION	CAF-702 C	CAF-702 P
1	12033566		PATA REGULABLE ARM.GASTRO	GASTRO CABINET ADJUSTABLE LEG	4	4
2	12103609		FUENT APV-16-24 115-230 50/60Hz 24V 16W	APV-16-24 115-230 50/60Hz 24V 16W SOURCE	1	1
3	12045530		SONDA NTC 2,5 MTS	THERMOSTAT PROBE	3	2
4	12115812		CABEZA AF-700 DTO FAGOR CONCEPT	HEAD AF-700 DTO CONCEPT	1	1
5	12036888		MICROR.CONMUT.E3111CA	MICROR.CONMUT.E3111CA	1	1
6	12104752		ADHESIVO G. CONCEPT PWC	PWC CONCEPT RANGE STICKER	2	2
8	12112674		TAPA EVAPORADOR	EVAPORATOR COVER	1	1
9	12043611		TERMOSTATO POWER COMPAC REFRIG	POWER COOLING THERMOSTAT COMPAC	1	1
9	12040693		TERMOSTATO POWER COMPAC CONG.	FREEZER POWER COMPACT THERMOSTAT	1	1
11	12041887		BATERIA 4T 4R 300A 4S (PINTADO	BATERIA 4T 4R 300A 4S (PINTADO	1	1
11	12030935		EV.B14T2R426A6S DPTO.PESC PIN.	EV.B14T2R426A6S DPTO.PESC PIN.		1
11	12046898		BAT. 6T 4R 300A 6S PINTADO	BAT. 6T 4R 300A 6S PINTADO	1	
12	12070030		SUJ.VENT.AFP-700,800 COMPACTO	SUJ.VENT.AFP-700,800 COMPACTO	2	1
13	12034545		VENTIL.EVAPOR.5W S/ARO S/PATAS	EVAPORATOR FAN 5w	2	1
14	12034663		REJILLA VENT.D.246 PINTADA	FAN GRILL Ø 246 PAINTED	1	1
16	12037617		DESAGÜE 1/2 PULG. CUELLO CORTO	DRAIN 1/2 PULG.		1
17	12037541		CODO PVC MIXTO 90º 20x1/2	CODO PVC MIXTO 90º 20x1/2		1
18	12028143		COMPR.SC-12-CL R404A	COMPR.SC-12-CL R404A	1	
18	12059107		COMPR. TL-5-G R134A	COMPR. TL-5-G R134A	1	2
19	12033007		CONDENSADOR 8X2 REF.	CONDENSADOR 8X2 REF.	1	2
19	12031472		CONDENSADOR 10X4 NEUTRO	CONDENSADOR 10X4 NEUTRO	1	
20	12059041		VENT 5W H72 Ø200 28º	FAN 5w H72 Ø200 28º	1	2
20	12033477		VENT. 10w H84 Ø254 22º	FAN 10w H84 Ø254 22º	1	
21	12036623		BANDEJA EVAPORACIÓN AUTOMÁTICA	AUTO PAN EVAPORATION	1	
22	12117149		TIRA LED T3-270-3014-868.16-CW24V DC 2mt	T3-270-3014-868.16-CW24V DC 2mt LED STRIP	1	1
23	12037375		CANALIZADOR AGUA 150 GRIS REFRIGERACION	REFRIGERATION GREY 150 WATER DRAINAGE	1	1
23	12037314		CANALIZADOR AGUA 150 NEGRO MANT.CONGEL.	FREEZER BLACK 150 WATER DRAINAGE	1	
26	12034317		PARRILLA 560x542 AR.SNACK	GRILL 560x542 CABINET SNACK	1	1
28	12036498		CREMALL.INT.DPTO.AF-702-C	CREMALL.INT.DPTO.AF-702-C	2	
28	12035898		CREMAL.INT.PEQ.EXT.DPTO	CREMAL.INT.PEQ.EXT.DPTO	2	2
29	12035502		CREM.DELANT.DCH.PEQ.AFP	CREM.DELANT.DCH.PEQ.AFP	1	1
29	12035504		CREM.DELANT.IZD.PEQ.AFP	CREM.DELANT.IZD.PEQ.AFP	1	1
29	12035486		CREM.DEL.PEQ.AFP-GN DCHA.	CREM.DEL.PEQ.AFP-GN DCHA.	2	2
31	12069216		REJILLA MOTOR 700 CONCEPT	GRID MOTOR 700 CONCEPT	1	1
32	12083604		PUE PEQ AFP CONCEPT IZD	PUE PEQ AFP CONCEPT IZD	2	2
33	12038144		BURLETE ARMARIO PUERTA PEQUEÑA	SMALL CABINET DOOR GASKET	2	2
35	12038130		BIS.TRS1D DOBL MUELLE DV-2608	BIS.TRS1D DOBL MUELLE DV-2608	2	2
38	12083396		FRONTI HOR.POST.AF-700,800-C/P	MAGNETIC HORZ.POST. AF-700,800 C/P	1	1
41	12036776		SOP.BISAG. INF IZQ. FRES	INF SOP.BISAG LEFT. FRES	1	1
42	12036986		SOP.BISAG.INF.IZD.	LEFT LOW HINGE SUPPORT	1	1
43	12041474		SOPORTE SUPERIOR BISAGRA IZQUIERDO	LEFT TOP HINGE SUPPORT	1	1
44	12037138		EJE ROSCA EXT.30X10INOX	THREADED SHAFT EXT.30X10INOX	1	1
45	12038076		EJE SUP. PUERTAS 30x10 VARILLA INOX.INT. M-6	SUP HUB. 30x10 ROD DOORS INOX.INT. M-6	1	1
46	12037723		CAJA ALOJAMIENTO MUELLE GRIS	GREY SPRING HOUSING BOX	2	2
48	12033758		CUBETA DPTO PESCADO 530X460	DEPARTMENT FISH BOWL 530x460		3
48	12033784		CUBETA DPTO CONGEL.530X540	DEPARTMENT FISH BOWL 530x540	3	
49	12034642		FOND.PERF.CUB.DPTO.530X460 AFP-SNACK	FOND.PERF.CUB.DPTO.530X460 AFP-SNACK		3
50	12035779		BANDEJA GOTEO DPTO.PESCADO	DRIP TRAY DPTO. FISH		1
51	12044961		CUBRER.EVAP.FC61B ARM.	CUBRER.EVAP.FC61B ARM.	2	1
52	12069485		DUELAS EVAP.DPTO.PESCADO 700/800/2100	SLAT EVAP.DPTO.FISH		1
53	12033255		RESIST.DESES.DEP.PESC.220V425W	RESIST.DESES.DEP.PESC.220V425W		1
53	12033938		RESIST.BLIND.FC61-71 350W 2500	RESIST.BLIND.FC61-71 350W 2500	1	
54	12036014		RESIST.MARCO EXT.700/800 43W	RESIST.MARCO EXT.700/800 43W	1	
55	12036316		RESIST.FRONTI H.1400-1600 12W	RESIST.FRONTI H.1400-1600 12W	1	
56	12036880		GUIA SNACK DPTO.PESCADO 519mm	GUIDE SNACK DPTO FISH 519 mm		6
56	12037936		GUIA SNACK DPTO CONGEL.562mm	GUIDE SNACK DPTO FREEZER 562 mm	6	
58	12035911		RESIST.BANDEJA DEPART.18W	RESIST.BANDEJA DEPART.18W	1	
71	12018649		COND.ARRANQ.SC 117U5017 80MF	COND.ARRANQ.SC 117U5017 80MF	1	
71	12033999		CONDEN.ARRANQUE TL-G 17U5014 60 mF	CONDEN.ARRANQUE TL-G 17U5014 60 mF	1	2
73	12035096		RELE ARRANQUE COMPRESOR SC-12CL	RELAY ARRANQUE COMPRESOR SC-12CL	1	
73	12034981		RELE ARRANQUE COMPRESOR TL-5G 6000	RELAY ARRANQUE COMPRESOR TL-5G 6000	1	2
80	12115884		UD.EV.AFP-700/800-C/P FRIO	UD.EV.AFP-700/800-C/P FRIO	1	1
80	12083687		UND. EVAP. AF-700-C COMPACT	UND. EVAP. AF-700-C COMPACT	1	