DESPIECE TECNICO

# Freidoras eléctricas
# Electric fryers
# Friteuse électrique
# Elektro fritteusen
# Friggitrici elettriche
# Fritadeiras elétricas

## GAMA SNACK

## Modelos:

**FE6-05 TE**
**FE6-10 TE**

***Mayo 2010 May***
***Revisado Julio 2011 / Revised July 2011***

FAGOR INDUSTRIAL

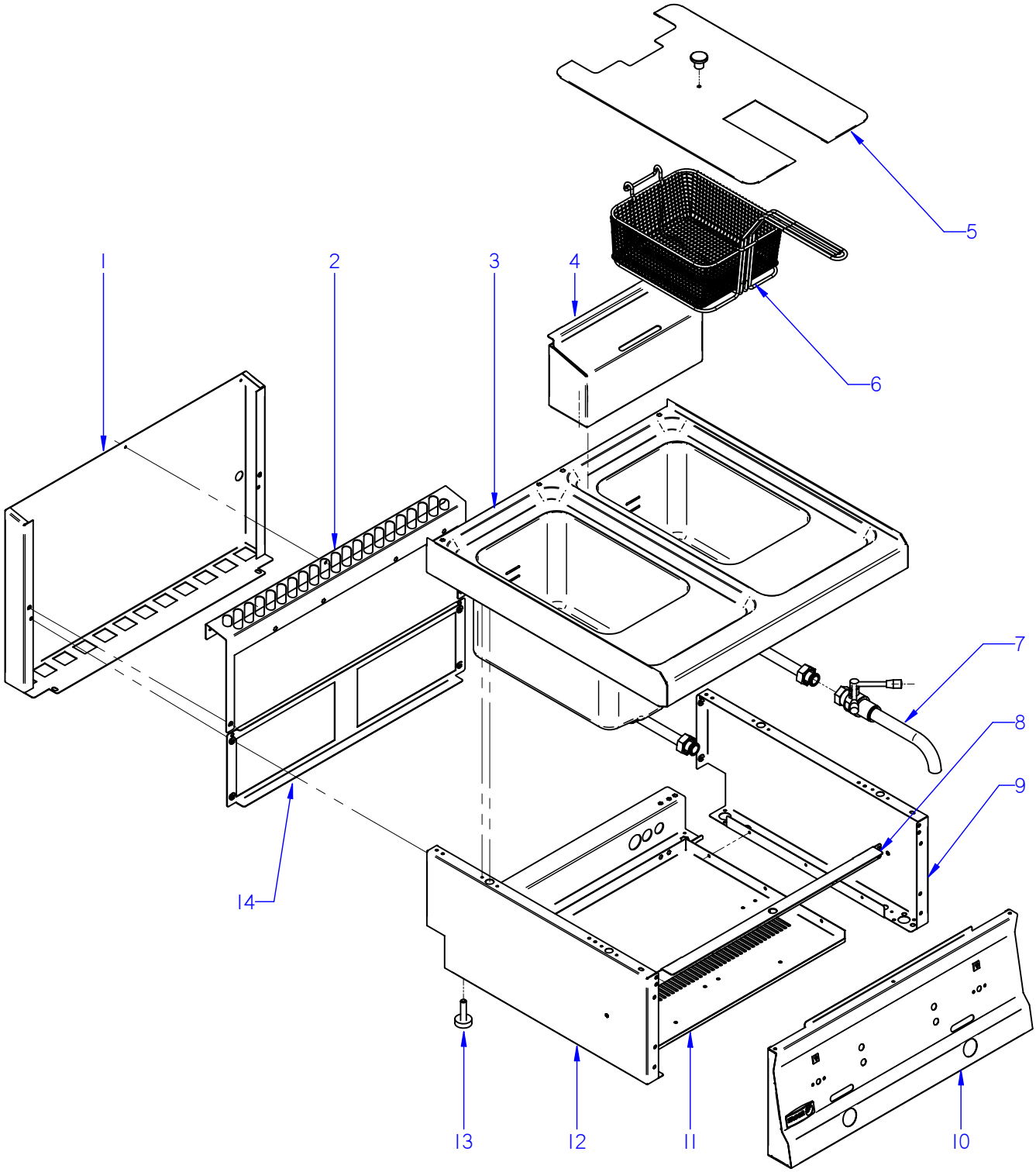


ITEM MARCADO EN COLOR = REPUESTO RECOMENDADO
COLOURED ITEM = RECOMMENDED SPARE PART

| N plano | Firma | Fecha | Aparato | MUEBLE | Lamina | |
|---|---|---|---|---|---|---|
| C-2640 | | 2010-05 | FREIDORAS FE4-10TE / FE6-10TE | | 1 | Fagor Industrial S.Coop. FAGOR Onate |

| MOD. | FREIDORAS / FRYERS | ZONA | MUEBLE / UNIT | PLANO | C-2640 |
|---|---|---|---|---|---|

| ITEM | CODIGO | DENOMINACION | TEXTO | FE6-05 TE | FE6-10 TE | | | | | | NOTAS |
|---|---|---|---|---|---|---|---|---|---|---|---|
| 1 | J142815000 | PROTECC. CHIMENEA POST. 400 | PROTECTION CHIMEMEY POS. | 1 | _ | | | | | | |
| S/Nº | J142627000 | BASE PROTECTOR CHIMEN. 400 | PROTEC. CHIMEMEY BASE 400 | 1 | _ | | | | | | |
| 1 | J142816000 | PROTECC. CHIMENEA POST. 600 | PROTECTION CHIMEMEY POS. | _ | 1 | | | | | | |
| S/Nº | J142628000 | BASE PROTECTOR CHIMEN. 600 | PROTEC. CHIMEMEY BASE 600 | _ | 1 | | | | | | |
| | Q419005000 | REMACHE 4X8 ALMG3 / ALUMINIO | RIVET 4X8 ALMG3 / ALUMINIUM | 2 | 2 | | | | | | |
| 2 | J152811000 | PROTECCION CHIMENEA ANT.605 | PROTECTION CHIMENEY ANT | 1 | _ | | | | | | |
| 2 | J152817000 | PROTECCION CHIMENEA ANT.610 | PROTECTION CHIMENEY ANT | _ | 1 | | | | | | |
| | Q221342000 | REMACHE EXAGONAL M5 | HEXAGONAL RIVET M5 | 3 | 3 | | | | | | |
| 3 | J155414000 | CUBA COMPLETA FE6-05 | CUBE FE6-05 COMPL. | 1 | _ | | | | | | ELIMINADA 05.07.2010 |
| 3 | J155420000 | CUBA COMPL.FE6-05 C/DESAGÜE | CUBE FE6-05 COMPL.C/DRAIN | 1 | _ | | | | | | INTRODUC. 05.07.2010 |
| 3 | J155416000 | CUBA COMPLETA FE6-10 | CUBE FE6-10 COMPL. | _ | 1 | | | | | | ELIMINADA 05.07.2010 |
| 3 | J155422000 | CUBA COMPL. FE6-10 C/DESAGÜE | CUBE FE6-10 COMPL.C/DRAIN | _ | 1 | | | | | | INTRODUC. 05.07.2010 |
| | Q221342000 | REMACHE EXAGONAL M5 | HEXAGONAL RIVET M5 | 12 | 12 | | | | | | |
| | Z442919000 | PITON CIERRE | LOCK SPIKE | 4 | 4 | | | | | | |
| 4 | J152818000 | SOP. CESTILLO FREIDORA FE6-10 | SOPORT BASKETS FRYERS | 1 | 2 | | | | | | |
| | Z442918000 | CLIP CIERRE | LOCK SPRING | 2 | 4 | | | | | | |
| 5 | J155409000 | TAPA FREIDORA SNACK FE6-05 | COVER SNACK FE6-05 FRYER | 1 | _ | | | | | | INTRODUC. 01.02.2011 |
| 5 | J155423000 | TAPA FREIDORA SNACK FE6-10 | COVER SNACK FE6-10 FRYER | _ | 2 | | | | | | INTRODUC. 01.02.2011 |
| S/Nº | X166154000 | POMO PARA TAPA | KNOB FOR COVER | 1 | 2 | | | | | | INTRODUC. 01.02.2011 |
| 6 | J156501000 | CESTILLO FREIDORA SNACK | CESTILLO FRIERS SNACK | 1 | 2 | | | | | | |
| 7 | J182102000 | VÁLVULA PARA ACEITE | VALVE FOR OIL | 1 | 2 | | | | | | ELIMINADA 01.07.2010 |
| | J142110000 | TOPE VALVULA | VALVE LIMIT | 1 | 2 | | | | | | ELIMINADA 01.07.2010 |
| 7 | J182108000 | VÁLVULA DRENAJE CON TOPE | DRAIN VALVE WITH STOP | 1 | 2 | | | | | | INTRODUC. 01.07.2010 |
| | J182109000 | CUERPO VÁLVULA DRENAJE | BODY DRAIN VALVE WITH STOP | 1 | 2 | | | | | | INTRODUC. 01.07.2010 |
| | J182104000 | TUBO DRENAJE | DRAIN TUBE | 1 | 2 | | | | | | INTRODUC. 01.07.2010 |
| | J142106000 | MANGUITO CONEXION GRIFO VAC. | MANGUITO CONEXION GRIFO VA | 1 | 2 | | | | | | |
| | J142111000 | JUNTA GRIFO VACIADO | JUNTA GRIFO VACIADO SNACK | 1 | 2 | | | | | | |
| | | | | | | | | | | | |
| | | | | | | | | | | | |
| | | | | | | | | | | | |
| | | | | | | | | | | | |

| MOD. | FREIDORAS / FRYERS | ZONA | MUEBLE / UNIT | PLANO | C-2640 |
|---|---|---|---|---|---|

| ITEM | CODIGO | DENOMINACION | TEXTO | FE6-05 TE | FE6-10 TE | | | | | | NOTAS |
|---|---|---|---|---|---|---|---|---|---|---|---|
| 8 | J142621000 | GUÍA PANEL PORTAMANDOS 400 | GUIDE PANEL OF CONTROLS | 1 | _ | | | | | | ELIMINADA 01.09.2010 |
| 8 | J002610000 | GUÍA PANEL PORTAMANDOS 400 | 400 GUIDE PANEL OF CONTROLS | 1 | _ | | | | | | INTRODUC. 01.09.2010 |
| 8 | J142624000 | GUÍA PANEL PORTAMANDOS 600 | GUIDE PANEL OF CONTROLS | _ | 1 | | | | | | ELIMINADA 01.09.2010 |
| 8 | J002612000 | GUÍA PANEL PORTAMANDOS 600 | GUIDE PANEL OF CONTROLS | _ | 1 | | | | | | INTRODUC. 01.09.2010 |
| 8 | J142624000 | GUÍA PANEL PORTAMANDOS 600 | GUIDE PANEL OF CONTROLS | _ | 1 | | | | | | |
| | Q221342000 | REMACHE EXAGONAL M5 | HEXAGONAL RIVET M5 | 4 | 4 | | | | | | |
| | Q012031000 | TORNILLO EXAGONAL M5x10 A304 | HEXAGONAL BOLT M5x10 A304 | 4 | 4 | | | | | | |
| 9 | J002834000 | PANEL LATERAL DERECHO | RIGHT SIDE PANEL | 1 | 1 | | | | | | |
| | Q221342000 | REMACHE EXAGONAL M5 | HEXAGONAL RIVET M5 | 1 | 1 | | | | | | |
| | Q419007000 | REMACHE TUBULAR C/V D3.2X6 | TUBULAR RIVET C/V D3.2X6 | 8 | 8 | | | | | | |
| | Z442918000 | CLIP CIERRE | LOCK SPRING | 4 | 4 | | | | | | |
| 10 | J152802000 | PORTAMANDOS COMPL. FE6-05 | CONTROL HOLDER FE6-05 | 1 | _ | | | | | | |
| 10 | J152804000 | PORTAMANDOS COMPL. FE6-10 | CONTROL HOLDER FE6-10 | _ | 1 | | | | | | |
| | U022836000 | ESCUDO FAGOR | FAGOR EMBLEM | 1 | 1 | | | | | | |
| | Q221023000 | CLIP SUJECIÓN RÁPIDA Ø5 | RAPID CONNECT CLIP Ø5 | 2 | 2 | | | | | | |
| 11 | J002604000 | BASE INFERIOR FE6-05 | LOWER BASE FE6-05 | 1 | _ | | | | | | |
| 11 | J002607000 | BASE INFERIOR FE6-10 | LOWER BASE FE6-10 | _ | 1 | | | | | | |
| | Q419005000 | REMACHE 4X8 ALMG3 / ALUMINIO | RIVET 4X8 ALMG3 / ALUMINIUM | 6 | 6 | | | | | | |
| | Q221342000 | REMACHE EXAGONAL M5 | HEXAGONAL RIVET M5 | 2 | 2 | | | | | | |
| 12 | J002833000 | PANEL LATERAL IZQUIERDO | LEFT SIDE PANEL | 1 | 1 | | | | | | |
| | Q221342000 | REMACHE EXAGONAL M5 | HEXAGONAL RIVET M5 | 1 | 1 | | | | | | |
| | Q419007000 | REMACHE TUBULAR C/V D3.2X6 | TUBULAR RIVET C/V D3.2X6 | 8 | 8 | | | | | | |
| | Z442918000 | CLIP CIERRE | LOCK SPRING | 4 | 4 | | | | | | |
| 13 | Z200107000 | PATA REGULABLE | ADJUSTABLE LEG | 4 | 4 | | | | | | |
| 14 | J142806000 | PANEL POSTERIOR FG6-05 | REAR PANEL FRYERS FG6-05 | 1 | _ | | | | | | |
| 14 | J142807000 | PANEL POSTERIOR FG6-10 | REAR PANEL FRYERS FG6-10 | _ | 1 | | | | | | |
| | Q419005000 | REMACHE 4x8 ALMG3 / ALUMINIO | RIVET 4X8 ALMG3 / ALUMINIUM | 4 | 4 | | | | | | |
| | | | | | | | | | | | |
| | | | | | | | | | | | |
| | | | | | | | | | | | |
| | | | | | | | | | | | |

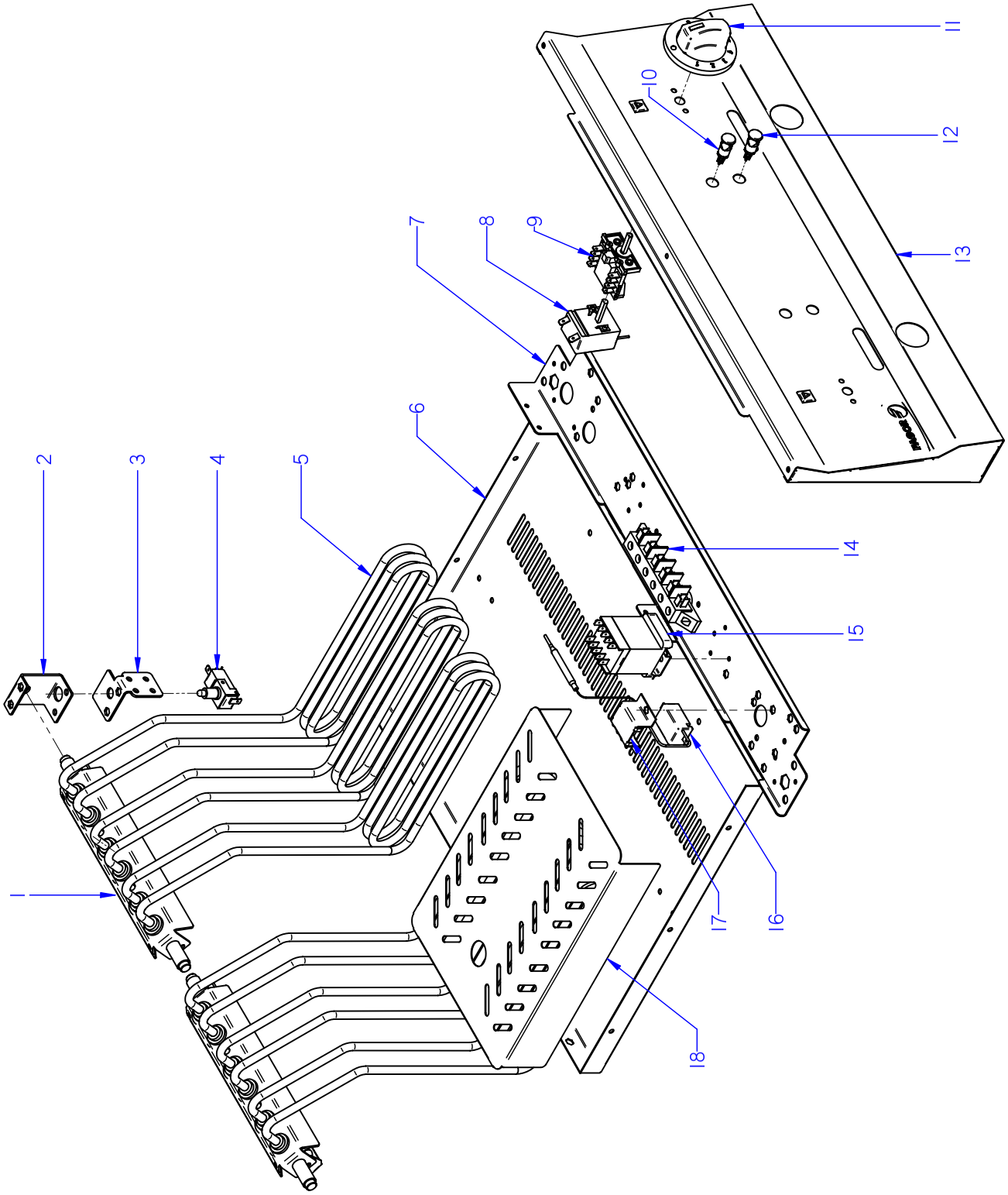


ITEM MARCADO EN COLOR = REPUESTO RECOMENDADO
COLOURED ITEM = RECOMMENDED SPARE PART

| N plano | Firma | Fecha | Aparato | CONJUNTO FUNCIONAL | Lamina | |
|---|---|---|---|---|---|---|
| C-2641 | | 2010-05 | FREIDORAS FE4-10TE / FE6-10TE | | 2 | Fagor Industrial S.Coop. FAGOR Oñate |

| MOD. | FREIDORAS / FRYERS | ZONA | CONJUNTO FUNCIONAL / FUNCTIONAL UNIT | PLANO | C-2641 |
|---|---|---|---|---|---|

| ITEM | CODIGO | DENOMINACION | TEXTO | FE6-05 TE | FE6-10 TE | | | | | | NOTAS |
|---|---|---|---|---|---|---|---|---|---|---|---|
| 1 | J152603000 | GIRO RESISTENCIAS COMPLETO | COMPL. RESISTOR ROTATION | 1 | 2 | | | | | | |
| 2 | J152609000 | SOP. EJE RESISTENCIA FE SNAK | RESISTOR SUPPORT | 2 | 4 | | | | | | |
| 3 | J152610000 | SOPORTE GIRO RESISTENCIAS D. | RESISTOR ROTATION SUPPORT | 1 | 2 | | | | | | |
| 4 | X343015000 | MICRORUPTOR Cod. 32280001 | MICRORUPTOR | 1 | 2 | | | | | | |
| S/Nº | J152614000 | TOPE MICRO | MICRO STOP | 1 | 2 | | | | | | INTRODUCIDO 01.06.2010 |
| 5 | J153016000 | RESISTENCIA 2000W(230V)SNACK | RESISTOR 2000W(230V)SNACK | 3 | 6 | | | | | | |
| S/Nº | J152616000 | GUIA CENTRAL RESISTENCIAS | CENTRAL RESISTANCE GUIDE | 1 | 2 | | | | | | INTRODUCIDO 28.04.2011 |
| 6 | J002604000 | BASE INFERIOR FE6-05 | LOWER BASE FE6-05 | 1 | _ | | | | | | |
| 6 | J002607000 | BASE INFERIOR FE6-10 | LOWER BASE FE6-10 | _ | 1 | | | | | | |
| 7 | J142601000 | FRONTAL SUPERIOR FE6-05 | FRONT SUPPORT FE6-05 | 1 | _ | | | | | | |
| 7 | J142602000 | FRONTAL SUPERIOR FE6-10 | FRONT SUPPORT FE6-10 | _ | 1 | | | | | | |
| 8 | X033000000 | TERMOSTATO 60-200C | THERMOSTAT | 1 | 2 | | | | | | |
| 9 | X163007000 | CONMUTADOR ACOPLE TERMOS. | THERMOSTAT CONNECT SWITC | 1 | 2 | | | | | | |
| | Q151320000 | TORNILLO ALOMADO M4x6 H,ZINC. | CURVED SCREW M4x6 H,ZINC. | 2 | 2 | | | | | | |
| 10 | R693055000 | PILOTO VERDE 41227000C7 | GREEN PILOT 41227000C7 | 1 | 2 | | | | | | |
| 11 | X482101000 | BOTON DE MANDO Ø6 FE-700 | CONTROL BUTTON Ø6 FE-700 | 1 | 2 | | | | | | |
| 12 | R693056000 | PILOTO AMBAR | AMBAR PILOT | 1 | 2 | | | | | | |
| 13 | J152802000 | PORTAMANDOS COMPL. FE6-05 | CONTROL HOLDER FE6-05 | 1 | _ | | | | | | |
| 13 | J152804000 | PORTAMANDOS COMPL. FE6-10 | CONTROL HOLDER FE6-10 | _ | 1 | | | | | | |
| 14 | R253044000 | REGLETA AUXILIAR FV-122 | AUXILIARY TERMINAL STRIP FV- | 1 | 2 | | | | | | |
| | Q152004000 | TORNIL. APLASTADO M5X13 A 304 | FLAT HEADED SCREW M5x13 A 3 | 2 | 4 | | | | | | |
| 15 | Z213007000 | CONTACTOR 230 V. 50-60 HZ | CONTACTOR 230 V. 50-60 HZ | 1 | 2 | | | | | | |
| | Z123018000 | GUIA CONTACTOR L-55 | CONTACTOR GUIDE L-55 | 1 | 2 | | | | | | |
| | Q419005000 | REMACHE 4X8 ALMG3 / ALUMINIO | RIVET 4X8 ALMG3 / ALUMINIUM | 2 | 4 | | | | | | |
| 16 | X033001000 | TERMOSTATO SEGURIDAD | THERMOSTAT | 1 | 2 | | | | | | |
| 17 | X353007000 | SOPORTE TERMOSTATO SEG. | THERMOSTAT SUPPORT | 1 | 2 | | | | | | |
| 18 | J156105000 | PANEL SEPARADOR FREIDORAS | FRYER DIVIDER PANEL | 1 | 2 | | | | | | |
| | | | | | | | | | | | |
| | | | | | | | | | | | |
| | | | | | | | | | | | |
| | | | | | | | | | | | |

| MOD. | FREIDORAS / FRYERS | ZONA | VARIOS / MISCELLANEOUS | PLANO | |
|---|---|---|---|---|---|

| ITEM | CODIGO | DENOMINACION | TEXTO | FE6-05 TE | FE6-10 TE | | | | | | NOTAS |
|---|---|---|---|---|---|---|---|---|---|---|---|
| | J156504000 | FOLLETO DE INSTR. FE SNACK | INSTRUC. LEAFLET FE SNACK | 1 | 1 | | | | | | |
| | J153003000 | ESQUEMA TEORICO FE6-05 | THEOR. DIAGRAM FE6-05 | 1 | _ | | | | | | PLANO HB-80489 |
| | J153004000 | ESQUEMA TEORICO FE6-10 | THEOR. DIAGRAM FE6-10 | _ | 1 | | | | | | PLANO HC-81118 |
| | J113007000 | ESQUEMA MONTAJE | ASSEMBLY DIAGRAM FTE | 1 | 1 | | | | | | PLANO HC-81170 |
| | J153005000 | CABLEADO PORTAMANDOS | CONTROL HOLDER WIRING | 1 | 1 | | | | | | |
| | R223002000 | CABLEADO REGLETA CONTACT. | CONTACTOR CONTROL WIRING | 1 | 2 | | | | | | |
| | J153017000 | CABLEADO RESISTENCIAS | RESISTOR WIRING | 1 | 1 | | | | | | |

# FTE 6-05, FTE 6-10, FE 6-05, CMF 6-05

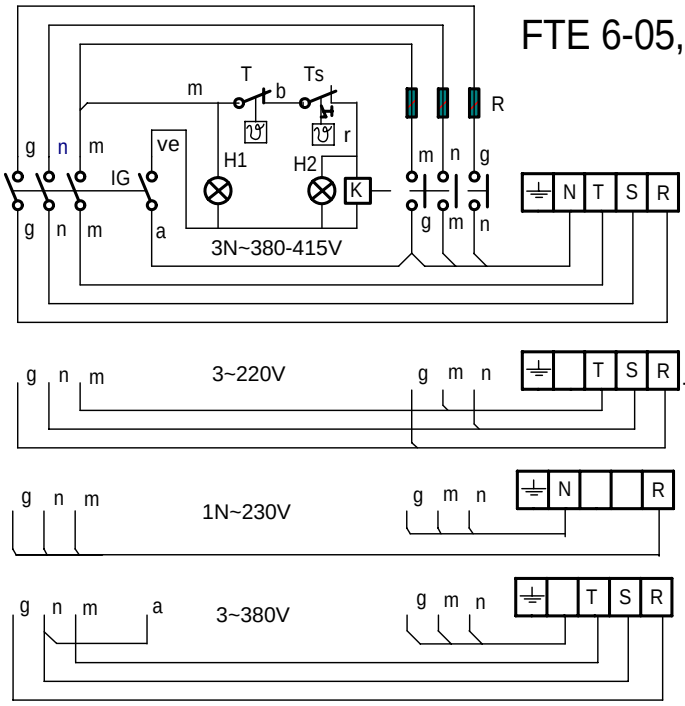


IG : Interruptor general / Main switch
H1 : Lámpara funcionamiento / Operating lamp
H2 : Lámpara calentamiento / Heating Lamp
K : Contactor de calentamiento / heating contactor
R : Resistencia de Calentamiento / Resistance heating
T : Termostato / termostat
Ts : Termostato de seguridad / Hi-limit termostat

r = rojo / red
m = marron / brown
g = gris / grey
n = negro / black
a = azul / blue
b = blanco / white
am/ve = amarillo-verde / Yellow-green

J153003000

| | | | | | |
|---|---|---|---|---|---|
| - | Theoretical diagram:FE 605, FTE 605, FTE 610, CMF 605 | | | **J153003000** | |
| Zk./Nº | Pieza | Cant. | Materiala/Material | Klas. zk/Nº Clas. | Gainazal akabera/Tratamiento |
| Zk./Nº | Aldaketa/Modificaciones | | Nork proposatua/Propuesta de | Data/Fecha | Perdoi orokorrak<br>Tolerancias generales |
| - | - | | - | - | |
| - | - | | - | - | < 5 ± 0.2 / 5 ÷ 25 ± 0.4 / 25 ÷ 50 ± 0.6 / 50 ÷ 100 ± 0.8 / >100 ± 1 / α ± 1º |
| - | - | | - | - | |
| - | - | | - | - | |
| - | - | | - | - | |

| | Sinadura/Firma | Data/Fecha | | |
|---|---|---|---|---|
| Marraztua/Dibujado | **e.carrascal** | **2008-10-23** | FAGOR<br>Fagor Industrial,Koop.Elk, Mugatua | Gainazal perdoia<br>Mecanizado superficial |
| Proiektatua/Proyectado | **e.carrascal** | **2008-10-23** | | — |
| Egiaztatua/Comprobado | J.Alberdi | **2008-10-23** | | |
| Eskala/Escala | **COOKING** | | | Plano Zk./Plano Nº<br>*HB-80489* |
| | | | | - Zk. ord. du |
| | Plano hau ezin daiteke erabili, ez berriztatu, gure baimenik gabe. | | | - Zk.gaitik ord. |

# FE 6 -10

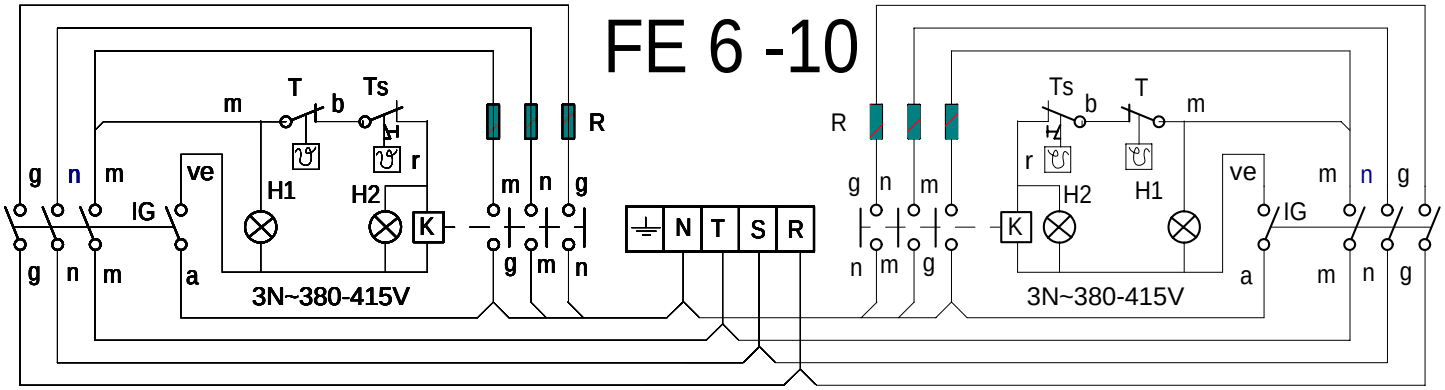


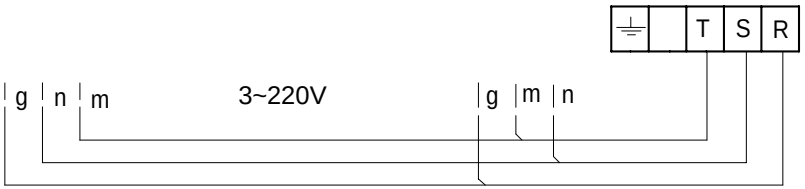





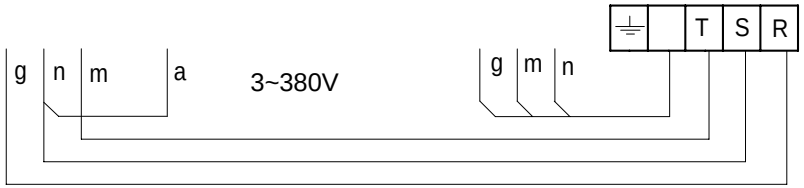


r = rojo / red
m = marron / brown
g = gris / grey
n = negro / black
a = azul / blue
b = blanco / white
am/ve = amarillo-verde / Yellow-green

J153004000

IG : Interruptor general / Main switch
H1 : Lámpara funcionamiento / Operating lamp
H2 : Lámpara calentamiento / Heating Lamp
K : Contactor de calentamiento / heating contactor
R : Resistencia de Calentamiento / Resistance heating
T : Termostato / termostat
Ts : Termostato de seguridad / Hi-limit termostat

| - | Theoretical diagram: FE610 | - | - | J153004000 | - |
|---|---|---|---|---|---|
| Zk./Nº | Pieza | Cant. | Materiala/Material | Klas. zk/Nº Clas. | Gainazal akabera/Tratamiento |
| Zk./Nº | Aldaketa/Modificaciones | | Nork proposatua/Propuesta de | Data/Fecha | Perdoi orokorrak Tolerancias generales |
| - | - | | - | - | |
| - | - | | - | - | < 5 ± 0.2 / 50 ÷ 100 ± 0.8 |
| - | - | | - | - | 5 ÷ 25 ± 0.4 / >100 ± 1 |
| - | - | | - | - | 25 ÷ 50 ± 0.6 / α ± 1 |
| - | - | | - | - | |

| | Sinadura/Firma | Data/Fecha |
|---|---|---|
| Marraztua/Dibujado | e.carrascal | 2008-10-23 |
| Proiektatua/Proyectado | e.carrascal | 2008-10-23 |
| Egiaztatua/Comprobado | I.Alberdi | 2008-10-23 |

FAGOR
Fagor Industrial,Koop.Elk, Mugatua

Gainazal perdoia
Mecanizado superficial
—

Eskala/Escala
-

**COOKING**

Plano Zk./Plano Nº
**HC-81118**

- Zk. ord. du
- Zk.gaitik ord.

Plano hau ezin daiteke erabili, ez berriztatu, gure baimenik gabe.

FTE 610 4x1,6KW J303001000
FTE 605 3x1,6KW J303001000
CMF 605 2x1,6KW J303001000
FE 605 3x 2 KW J153016000
CPE 605 2x3KW J153002000

NOTA: en el caso de 2 resistencias las conexiones de color marron quedan al aire

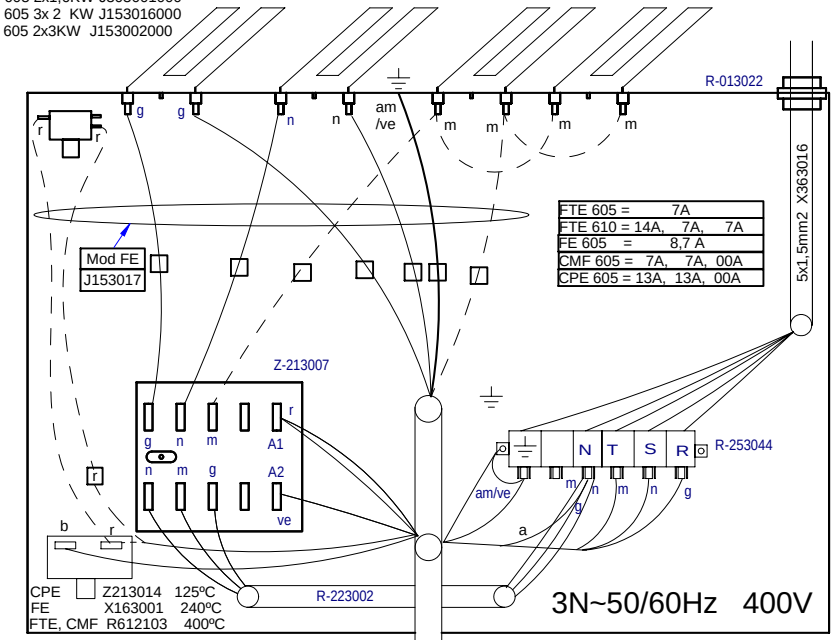


FE 610 x2

## FTE 605 FTE 610, FE 605, CMF 605

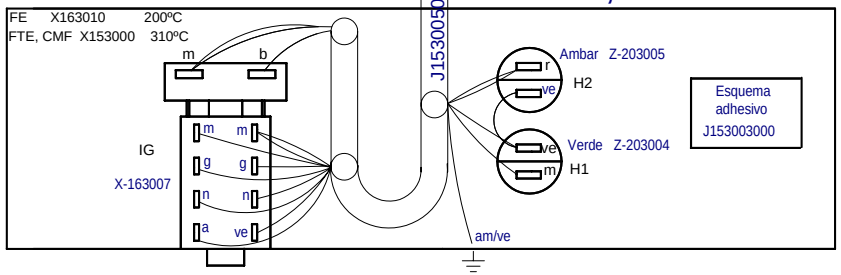


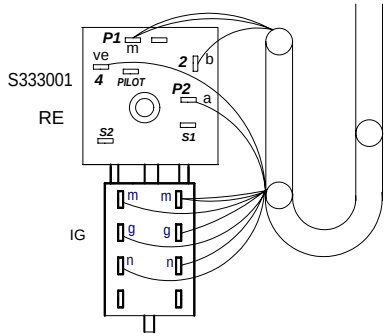


Esquema adhesivo J213001

## CPE 605

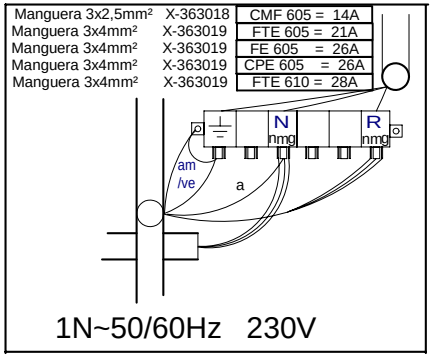


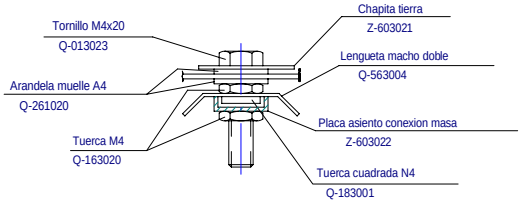


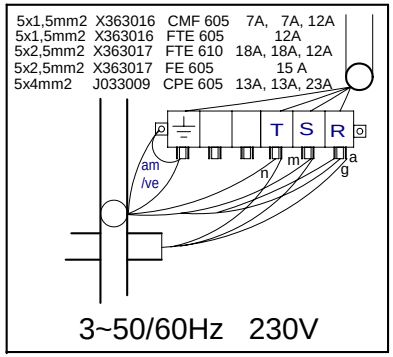


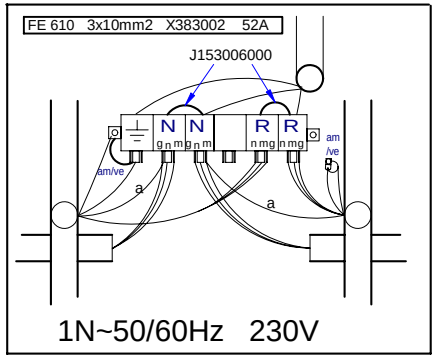


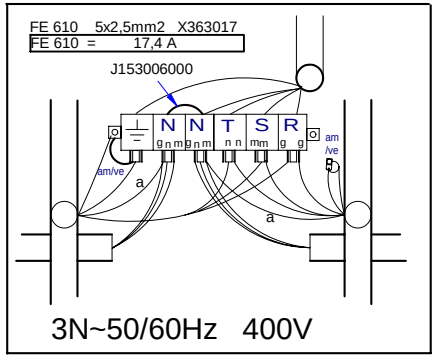


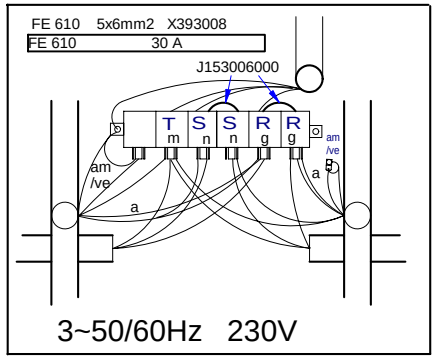


FE 610 Esquema adhesivo J153004000

# FE 610

| | | | | | |
|---|---|---|---|---|---|
| - | **Plano Montaje** | - | | **J113007000** | |
| Zk./Nº | Pieza | Cant. | Materiala/Material | Klas. zk/Nº Clas. | Gainazal akabera/Tratamiento |
| Zk./Nº | Aldaketa/Modificaciones | | Nork proposatua/Propuesta de | Data/Fecha | Perdoi orokorrak Tolerancias generales |
| **01** | **FE PASAR DE 2 A 3 RESISTENCIAS EN LA CUBA** | | **M.Maillo** | **2009-02-23** | |
| - | - | | - | - | < 5 ± 0.2 / 50 ÷ 100 ± 0.8 |
| - | - | | - | - | 5 ÷ 25 ± 0.4 / >100 ± 1 |
| - | - | | - | - | 25 ÷ 50 ± 0.6 / α ± 1º |
| - | - | | - | - | |

| | Sinadura/Firma | Data/Fecha |
|---|---|---|
| Marraztua/Dibujado | **M.Maillo** | **2009-05-13** |
| Proiektatua/Proyectado | **M.Maillo** | **2009-05-13** |
| Egiaztatua/Comprobado | I.Alberdi | **2009-05-13** |

FAGOR

Fagor Industrial,Koop.Elk, Mugatua

Gainazal perdoia Mecanizado superficial

—

Eskala/Escala

**COOKING**

Plano Zk./Plano Nº HC-81170 - 01

Plano hau ezin daiteke erabili, ez berriztatu, gure baimenik gabe.

- Zk. ord. du

- Zk.gaitik ord.